80/20®

BUILD YOUR IDEA

CUSTOM ALUMINUM FRAMING SYSTEMS

PRODUCT CATALOG 24

Table of Contents

Page Numbering System

Each section will have their own designation of page numbers. The section will be idenitified with the first number followed by the page number in that section.

Ex: Butt fastener is in section 3 (Fasteners) on page 15 of that section (page 3-15).

Pictorial Overview

Each section begins with a visual product overview.

1515-UL Profile

Page 2-32

Anchor Fastener

Page 3-12

Part Number Index

Find more information about a specific product based on the part number. (see section 12)

Part No.	Page No.
1001	2-17
1002	2-18
1003	2-19
1004	2-20
1010	2-16

SEC 1 **WHAT IS 80/20** Application photo gallery, services, free design tools and customer support

SEC 2 **PROFILES** Aluminum T-slotted framing system, Ready Tube® framing, Quick Frame® framing

SEC 3 **FASTENERS** Anchor fasteners, flat plates, brackets, Ready Tube® and Quick Frame® connectors

SEC 4 **PANELS & DOORS** Plastic panels, mesh panels, plates, hinges, handles, latches, mount blocks and door track

SEC 5 **CASTERS & FEET** Rigid & swivel casters with locking options, leveling feet, floor brackets and base plates

SEC 6 **BEARINGS & PIVOTS** Linear bearings, Unibearings, bearing pads, brake kits, dynamic pivots assemblies

SEC 7 **STANCHIONS** Bases, mounting plates, cross clamps used with round tube aluminum or steel profiles

SEC 8 **ACCESSORIES** End caps, T-slot cover, 45-degree supports, wire management, manifolds, and monitor mounts

SEC 9 **STRUCTURAL SHAPES** Tube profiles, flat stock aluminum, bearing profiles, square tube profiles and angle profiles

SEC 10 **MACHINING SERVICES** Profile cut-to-length, tap profile end, counterbore, drill thru, panel cut-to-size, radius and notch clearance

SEC 11 **TOOLS** Hex wrenches, hex drivers, jigs, soft face mallet, combination wrenches and sockets

SEC 12 **INDEX** Glossary, part number index, product type index, unit of measure equivalents

www.8020.net

What is 80/20?

About 80/20

First and foremost, I'm sure you're wondering "What is 80/20?" Who are we, what do we sell, and what's our value? Simply stated, 80/20 is a T-slot aluminum construction system you can use to build virtually anything.

When you think of 80/20 think of an "erector set" for adults. You mix, match, assemble and reassemble our products to create your customized solution or innovation.

80/20 provides a one-stop shop for our customers. You will find 80/20 being used everywhere including industrial, commercial, do-it-yourself and other markets and applications. We offer several services such as technical design assistance, custom machining, assembly services, and an in-house custom panel shop. 80/20 ensures that our customers can expect a high-quality product each and every time.

Why the Name 80/20?

In business, the 80/20 theory is a powerful tool. This theory is called Pareto's Law after Vilfredo Pareto (1843-1923), an Italian economist and sociologist who said that 80% of your results come from 20% of your efforts. We run our organization based upon this theory and everyone shares in the advantages.

80/20 Mission

Empower and encourage the designer and builder in all of us through:

- Cultivating and Supporting Creative Innovators
- Community Engagement
- Operational Excellence
- World-Class Customer Experience

80/20 Vision

Relentless pursuit to provide innovative modular building systems that inspire custom solutions.

We strive to develop and facilitate our building systems to construct virtually anything to be used virtually anywhere, while at the same time creating ways to share great ideas that encompass the limitless power of the human creative spirit.

Business Model

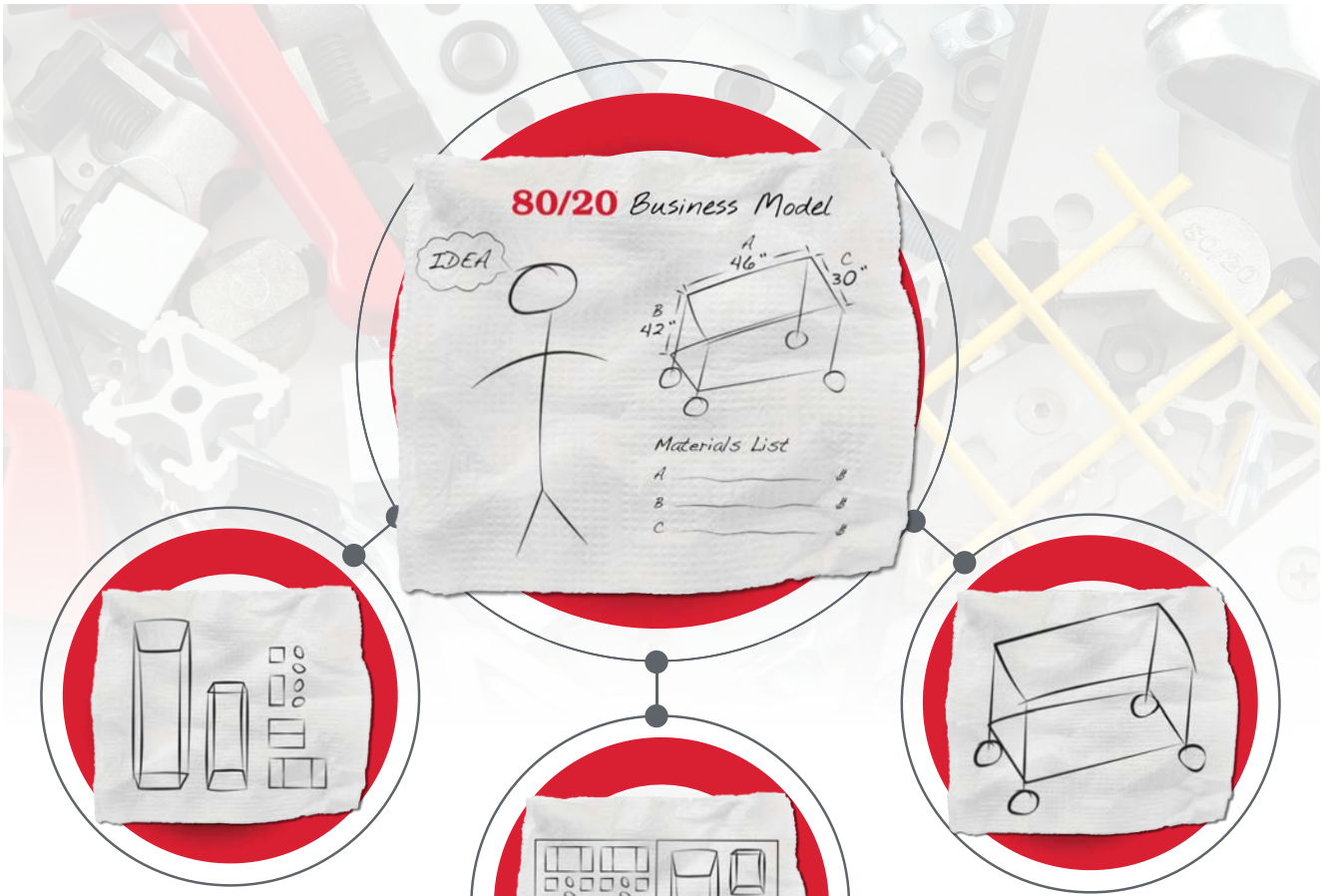

Parts & Pieces

Materials shipped as parts and pieces ready for full assembly.

Kit Form

Materials packaged as a kit(s) and ready for easy assembly.

80/20 Builds

80/20 Design Technician Specialists partially or completely build your project, shipping it to you ready to go with 80/20 Builds (pg. 1-22)

Need Help Getting Started?

Get a quote from the 80/20 Design Assistance team. Call 260-248-8030 today and turn your idea into a real world solution!

GUARDING & ENCLOSURES

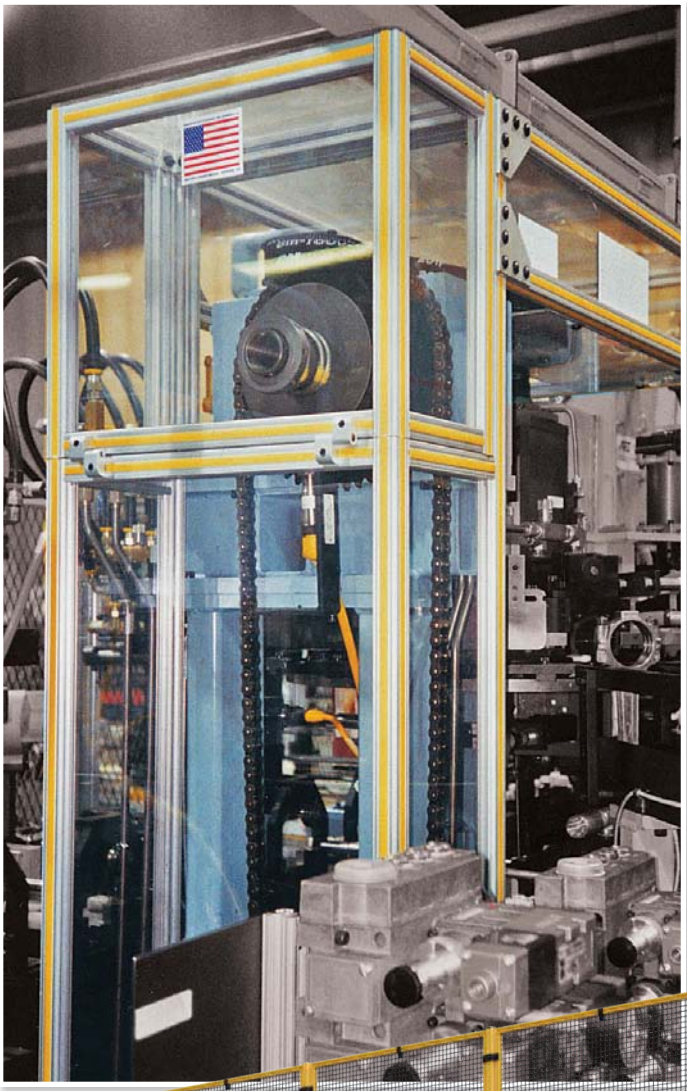

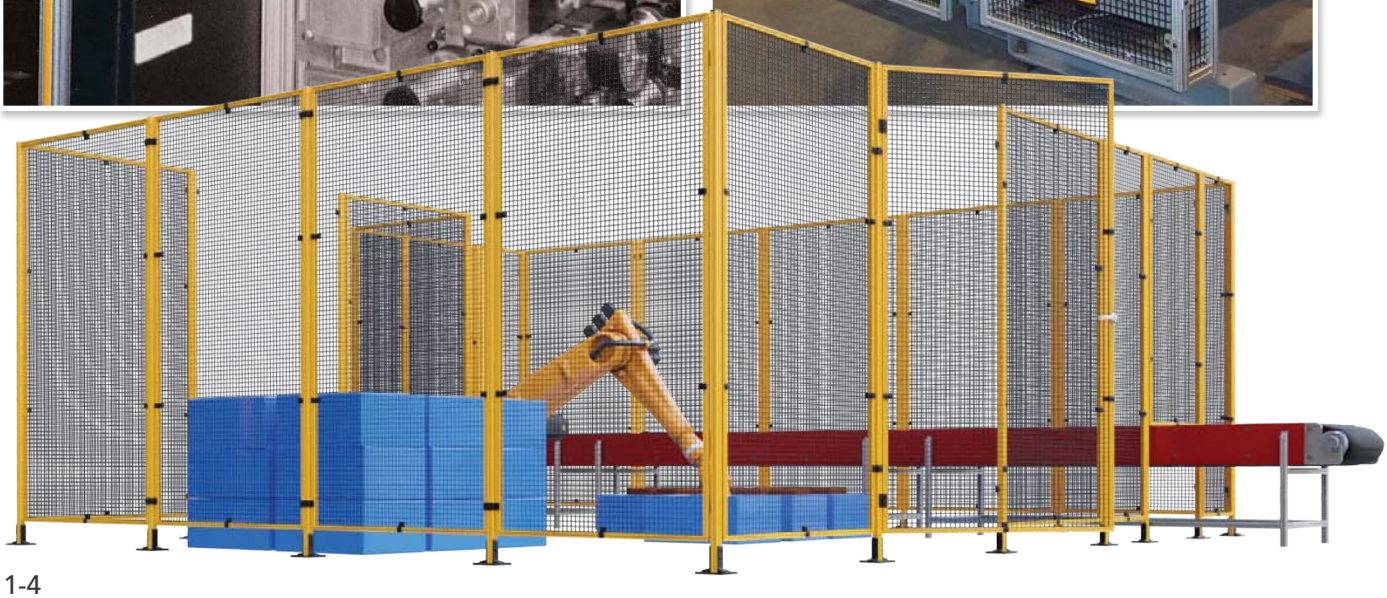

MACHINE FRAMES

Miter Saw Stand

Buy the kit today! Available at 8020.net

What is 80/20?

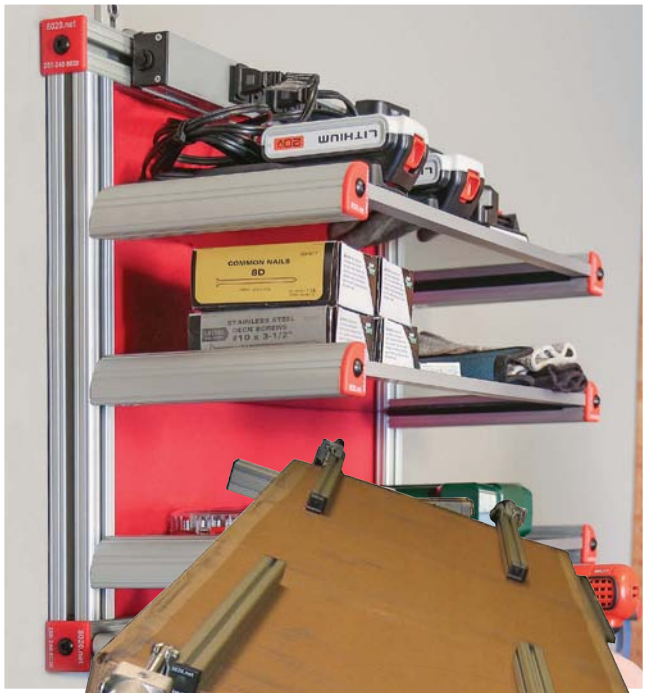

MATERIAL HANDLING

WORKSTATIONS

ROBOTICS & LABS

Playing At ArcLight Hollywood
Beginning August 19th
One Day
Anne Hathaway/Jim Sturgess

DISPLAYS

DANGER
AUTHORIZED
PERSONNEL
ONLY

2000 FIA GT CHAMPION
JULIAN BAILEY

What is 80/20?

BLACK ANODIZE

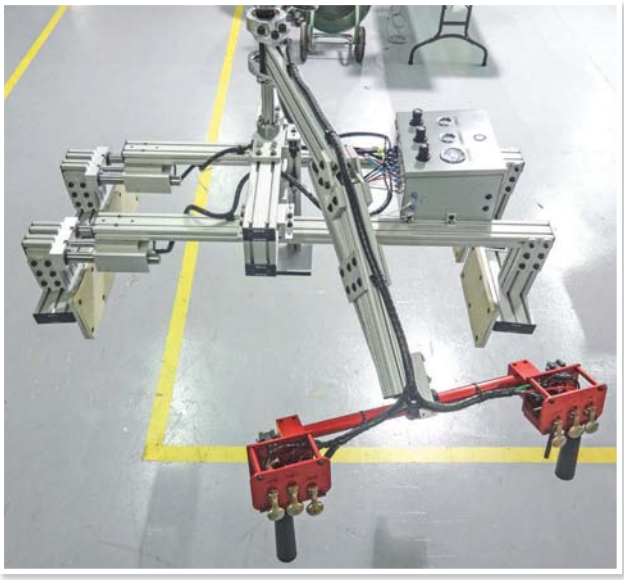

AUTOMATION

FACILITIES

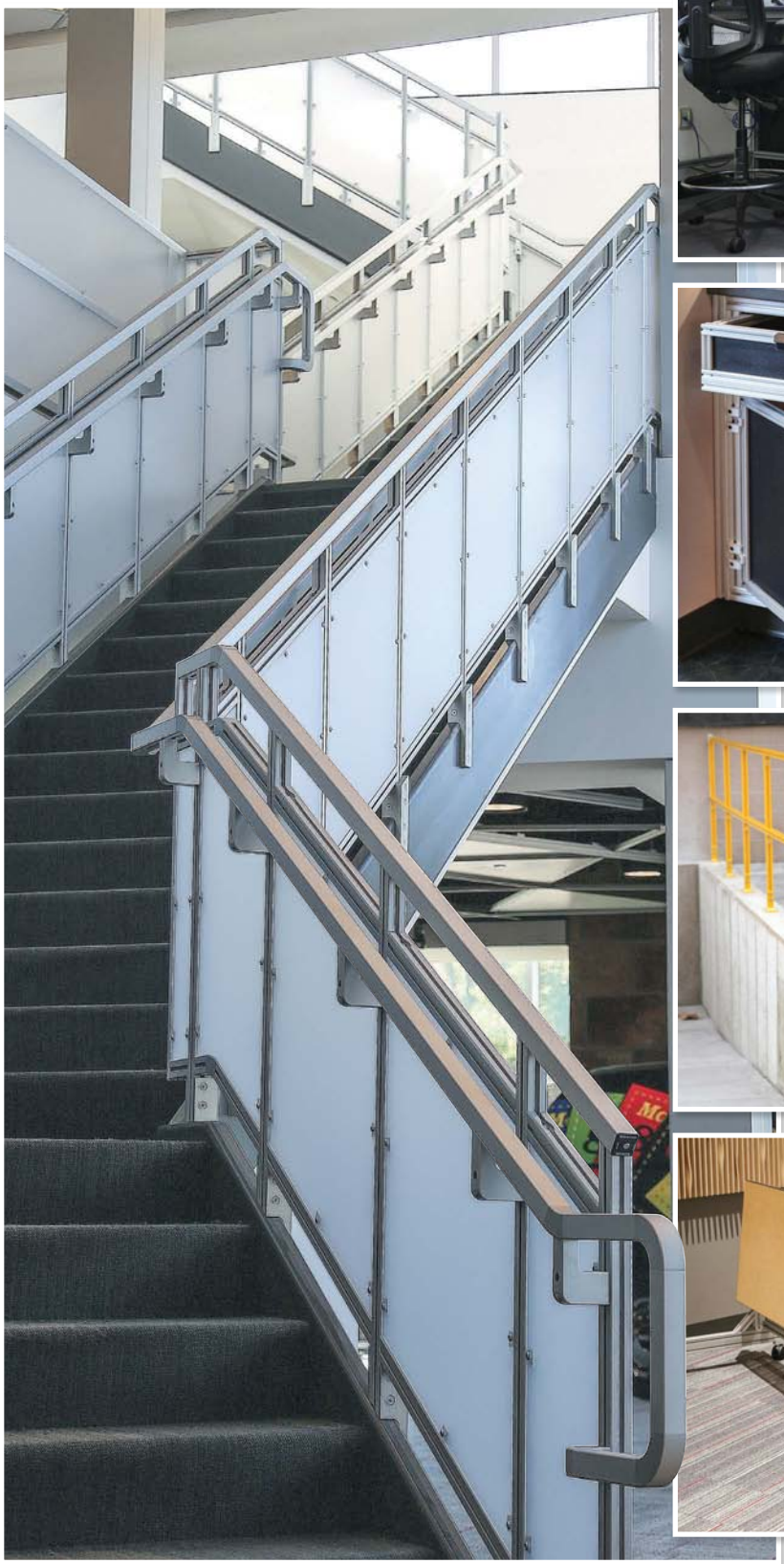

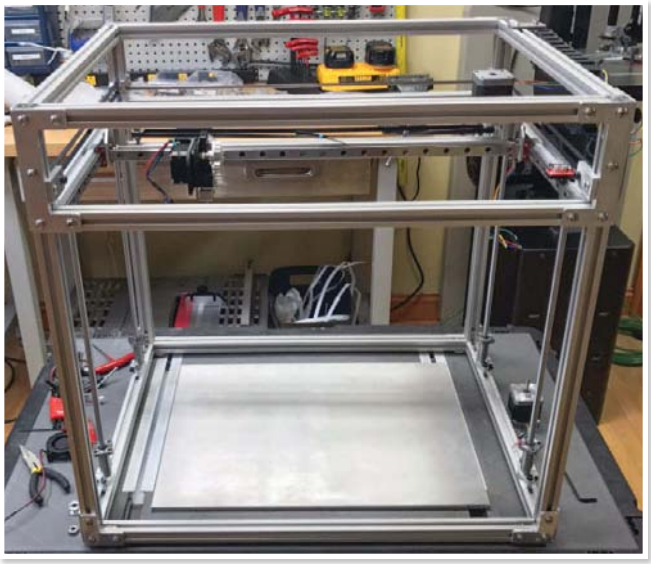

DIY

Racing Simulator

Buy the kit today!
Available at 8020.net

What is 80/20?

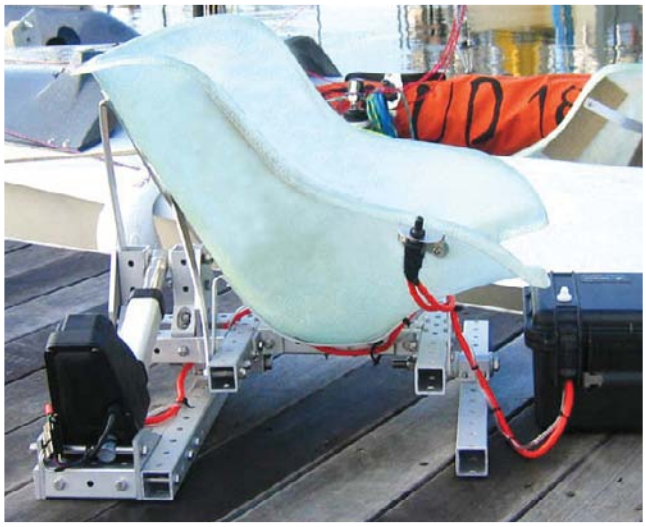

Ready Tube®

Quick Frame®

What is 80/20?

One-Stop-Shop

80/20 One-Stop-Shopping means you get convenient and efficient products and solutions, as well as the services to augment your order, all in one place. Save the time, hassle, and headache that come from working with multiple vendors.

Our commitment to being your one-stop-shop means that we have no minimum orders; we want ALL of your business. We know that your project is unique and that you need the flexibility to order in small or large quantities.

It also means we listen to your needs and continually add to our stock of products. We already have the largest product offering in the industry and it's only going to continue to grow! Our products are customer-driven and always expanding. And if it's something we don't currently carry, we'll source it for you.

In order to make your 80/20 experience simple and straightforward we have in-house capabilities to support our dedication to being your one-stop-shop. These are top-of-the-line machine shops and services that produce at the same level of quality you can expect with anything 80/20. These valuable resources are at your disposal to streamline your processes and save you time.

Call an 80/20 Design Technician today at 260-248-8030

The 80/20 Difference

We know how frustrating it is when that order you placed arrives damaged, with incorrect parts, or in poor quality. At 80/20 we set high standards for each and every process to make sure you never experience this disappointment with any 80/20 shipment.

At 80/20 we go the extra mile to ensure you get the product you want how you want it. We adhere to rigorous quality checks throughout the entire product lifecycle. This 80/20 difference means that on every order, your parts will be cleaned, and individually packed by type. Hardware and parts will be clearly labeled and packaged with appropriate measures for safe transit.

For orders that you need segmented into kits or bundles, that's not a problem. Receiving your shipment in kit form is especially useful for instances where you have multiple quantities of the same project, allowing for easy organization and setup.

If you are ordering large quantities, our bundling service packages similar products together. For instance, all of your bars will be packed together and all of your panels packed together. As with all orders, they will be clearly labeled. Bundled orders typically have lower freight costs due to their consolidated nature.

When you have an order with specific packing requirements, we can accommodate.

Visit our Custom Packaging page (pg. 1-27) for more information.

What is 80/20?

Ongoing Support

Your 80/20 support doesn't end when you receive your order. If you have questions or need assembly advice or suggestions, we've got you covered. Our dedication to providing you quality products and services is all-inclusive; we want to partner with you on your entire solution.

On the off chance that your order isn't exactly what you expected, we'll make your return simple and painless and expedite the fulfillment of a replacement. Visit our return policy on page 1-29 and you can always speak to a representative to work through the process with you.

Customer Support

It's important that you get the information, assistance and answers you need when you need them. You don't want to spend time navigating through a stream of prompts or being passed from one person to another.

At 80/20 our phone is answered by a live person who will quickly direct you to the right person. Our hours of operation are from 7:00 a.m. to 5:30 p.m. ET and if you need after-hours assistance we have personnel available.

If you prefer the convenience of online assistance we offer live chat sessions to accommodate your schedule and provide interactive support. You can expect prompt responses and useful information.

From product questions to order tracking or design assistance, we have an extensive network of support specialists ready to help through a variety of communication channels. Whether you prefer email, phone, or live chats, you'll work with knowledgeable and experienced personnel to get the dedicated attention and information you need in a quick, concise manner.

Contact a Representative today for product information, design assistance, order tracking, or any other questions you may have.

Local Distributor Network

80/20 has an extensive network of local distributors to serve your full cycle needs. These specialists provide a range of services from on-site demonstrations and evaluations to after-order assistance.

Your local distributor is there for you throughout every stage of the 80/20 experience. Even before you begin designing your solution, technicians can visit your business to provide a review of your equipment and processes. You'll find that distributors have "80/20 eyes." They can see places and procedures where 80/20 products and services will help speed up product lifecycles, cut your costs, or create synergies.

Local distributors are also available for recommendations on integrating 80/20 with your current equipment and resources. 80/20 partners with distributors focused on a robust line card able to serve a diverse industry base and accommodate your total-project requirements.

Online Assistance

Distributor Lookup

Use the Distributor Lookup tool to find your local 80/20 partner. Use the QR code to visit the lookup.

Design Assistance

From Concept to Completion

We have highly skilled design technicians on-staff to provide you a custom quote and offer optimization recommendations. These experienced technicians will see your solution through from idea to production. We'll help you save costs by finding the best, most economical option to get the job done.

Our technicians have a great eye for detail and take the time to review your design for accuracy. We'll work with you to address your requirements.

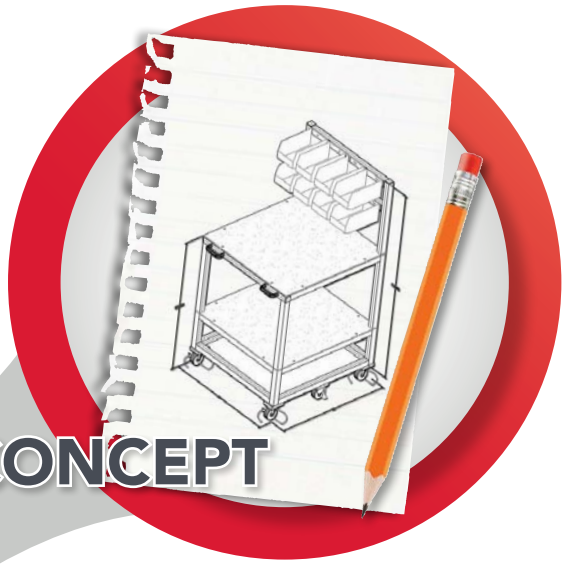

Local Assistance

Our local distributors are also available through an extensive network for added support. 80/20 distributors are the most knowledgeable and experienced in the industry.

No Project Too Big or Too Small

There are no size limits on what we will quote. No design is too big or too small; we appreciate all of your business and want to work with you on any project.

Online Design Assistance Tool

Our online tool makes it fast and straight-forward to submit your request for design assistance. Simply fill out the preliminary design sheet and, if applicable, upload your drawing(s).

For additional details or to use the Online Design Assistance Tool visit our website at www.8020.net.

What is 80/20?

Free Design Tools

80/20 offers several free tools, libraries, and drawing files to make it easy for you to design and enhance your 80/20 project. This variety of resources also make it simple for you to integrate 80/20 products into existing designs. Be sure to check out our YouTube site for helpful hints as well as tips and tricks videos.

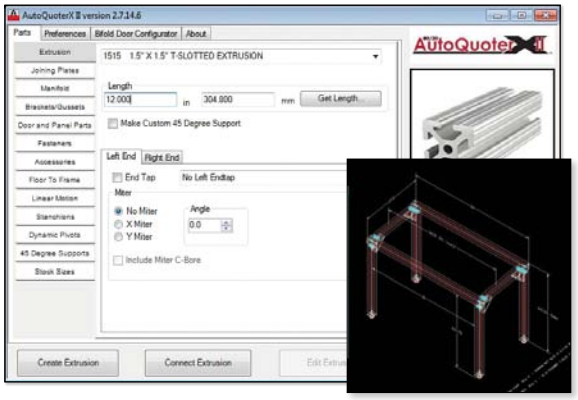

80/20 AutoQuoterX® II

AutoQuoterX® II is used in conjunction with versions of AutoCAD® software for optimum design capabilities. It is free and can be downloaded from our website. This plugin features an easy-to-use interface to streamline the design process and generate a detailed bill of materials. We are continually updating and enhancing AutoQuoterX® II tools and resources.

80/20® Tech Toolkit™

Tech Toolkit™ offers bundled design tools to provide guidance and speed up design time. These tools will help specify the profiles that work best for your application. Use the built-in conversion calculator to cross-reference calculations. There is also an online deflection calculator at 8020.net for beam deflection, as well as a miter cut worksheet to assist in creating drawings, analyzing real-life limits, and more.

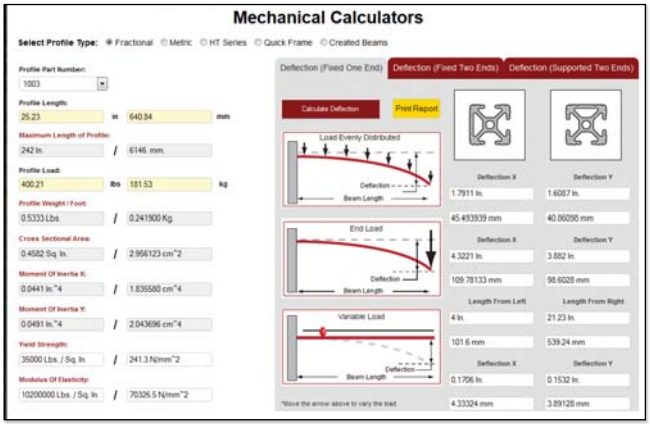

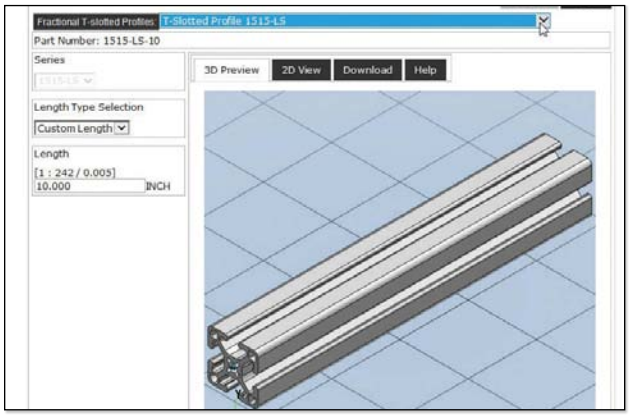

80/20 PART SOURCE™
CAD File Library Powered By PARTsolutions®

80/20's PartSource® is a CAD library powered by PARTSolutions® and is accessible directly from our website. It includes design files for parts and profiles. Products are available in both 2D and 3D file types, supporting a variety of CAD packages. Users of Inventor® also have the added benefit of a direct link to PARTSolutions®. These design files are also available at 8020.net on each product page.

Free Design Tools

SolidWorks® 2012 - Dynamic Library

The 80/20 SolidWorks® Dynamic Library is a free single download of thousands of parts, including profiles, fasteners and accessories, as well as profile weldments. This simple download makes it easier for you to design, test, and experiment with your builds. We are continually adding drawing files, so be sure to check for updates at 8020.net.

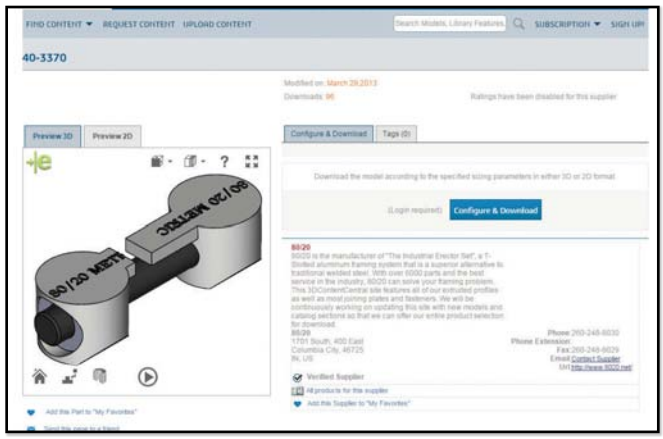

3D Content Central® provides easy to find 2D and 3D file types for 80/20 profiles, fasteners and accessories. The files support a wide range of CAD packages. Users of SolidWorks® have the added benefit of a direct link to 3D Content Central.

CAD DIRECT

Free Streamlined Files

80/20 offers free streamlined files for T-slot, Ready Tube® and Quick Frame® profiles. Each profile series is downloadable in its own convenient file. The files are available in:

- **AutoCAD® - DXF – 2D**
- **SolidWorks® 2013 – SLDPRT**
- **Inventor® - IPT File Format**
- **SketchUp – SKP File Format**

Visit 8020.net to use all of 80/20's design tools!

What is 80/20?

80/20 BUILDS

Time is critical in today's fast-paced world. 80/20 Builds assembly service gives you more time to focus on what you do best. We'll take your project from the design stage all the way through to completion, including the actual assembly.

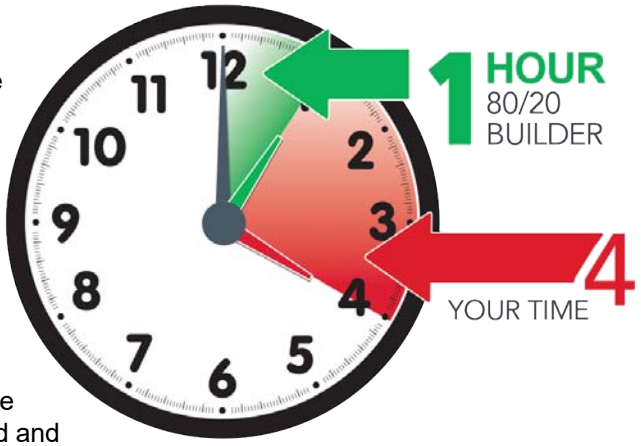

It stands to reason that, on average, we can assemble your project in about a quarter of the time it takes someone who doesn't build with 80/20 day in and day out. Consider all the other projects and tasks that can be done in that time!

The 80/20 Builds service was created to help you increase your productivity. We have a team comprised of dedicated and experienced technicians who optimize designs, build projects and ship them safely and damage-free.

PRELOADING

We prep your fasteners and plates with the required hardware for quick installation.

SUBASSEMBLY

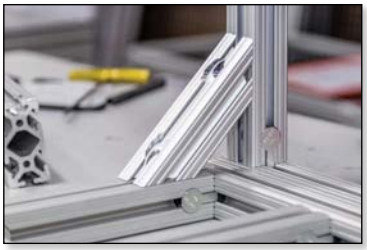

We build your project into segments that can be easily and quickly assembled later.

FULL ASSEMBLY

Your project is completely built, shipped, and ready to use when it arrives at your door.

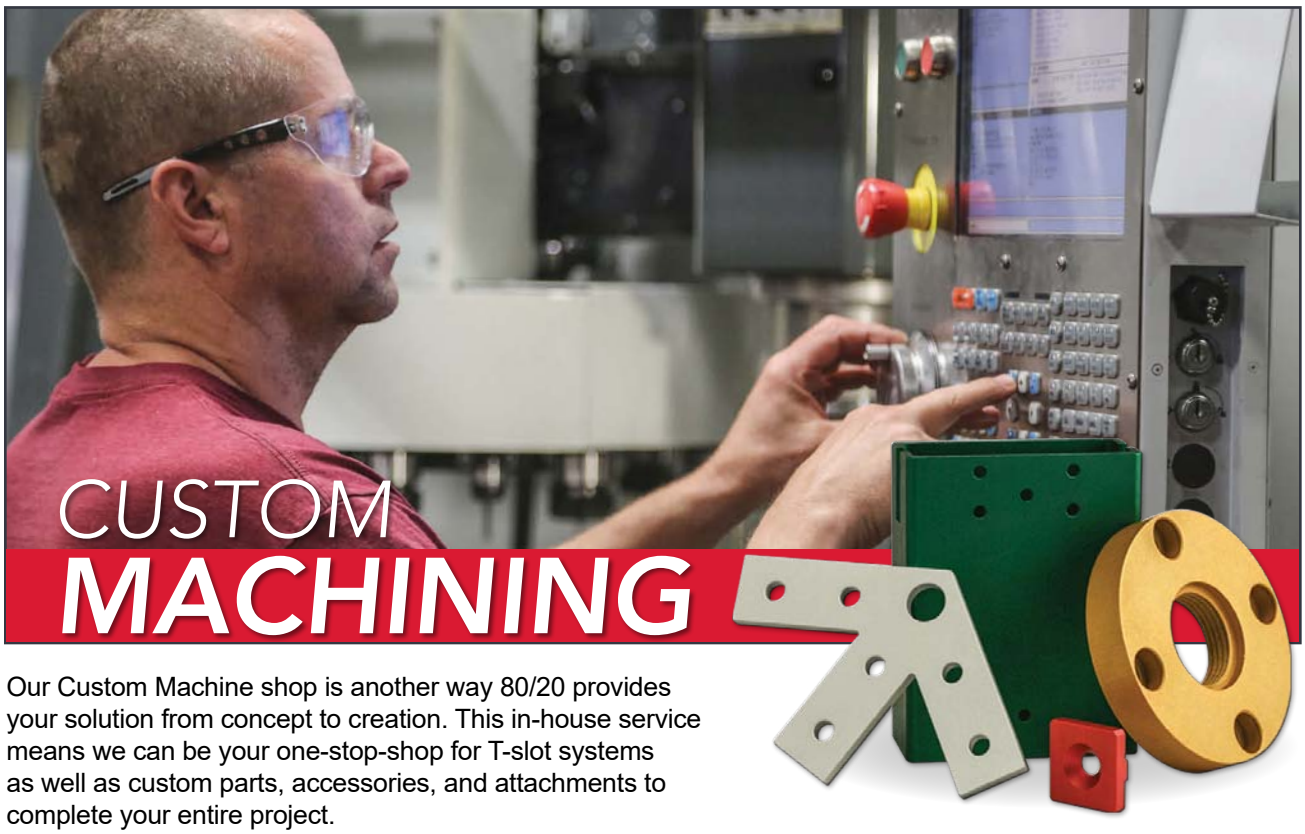

CUSTOM MACHINING

Our Custom Machine shop is another way 80/20 provides your solution from concept to creation. This in-house service means we can be your one-stop-shop for T-slot systems as well as custom parts, accessories, and attachments to complete your entire project.

Our precision in-house Custom Machine shop quickly makes adjustments or changes to any part in our catalog, saving you the headache involved in outsourcing these services. We can also make an entirely new piece completely customized for your needs. And if it's not a material we carry, we'll source it for you.

VAST STOCK OF PARTS

We offer over 200 in-stock structural shapes; 80/20 will make the custom bracket or mount you need to augment your order. Don't waste time and energy working with multiple vendors. We have the materials, personnel and equipment to provide your products with a quick turnaround and the high level of quality that comes with all 80/20 products and services.

NO PART TOO BIG OR TOO SMALL

We specialize in custom-machining aluminum; there are no minimum charges and no minimum runs. Our state-of-the-art equipment is set up for single parts or large quantities, all to the tightest of tolerances.

Contact a design technician today at 260.248.8030 for assistance with your Custom Machining project.

What is 80/20?

PANEL SHOP

80/20's in-house Panel Machine Shop is a service that provides you the total solution for your project needs. We stock a selection of over 100 varieties of plastic panels, aluminum plates, and wire mesh with thicknesses ranging up to half an inch. This huge supply means you won't have to wait on material or the machining; we do it all in one location.

We machine our panels in-house, saving you valuable time and money; you'll get your project fast and to your exact requirements.

We have the equipment to take your design and create the custom shape, access point, door, or barrier your project may require. The results of this extensive in-house shop are finalized materials that are seamlessly incorporated into your application.

This is accomplished at the high level of quality we hold ourselves accountable to in all of our products and services. From the initial design stages through our hand-packing procedures, you'll receive your panel just as you ordered it and expect it – to your specifications and damage free.

PANEL SHOP MACHINING

- Cut to Size
- Custom Designs
- Engraving
- Lettering
- Recessing
- Perforating
- Notch for Hardware

METAL FINISHING

Our in-house metal finishing capability is one of the several ways 80/20 is committed to being your one-stop-shop for T-slot projects. This service encompasses a range of options to provide you with fast turn times and consistent, high-quality, products.

Our standard finishing process here at 80/20 begins with the raw aluminum product; we machine the part, vibratory finish and/or sand it (depending on the item), and then move it into the anodize finishing process. It's worth noting that 80/20 is one of the only T-slot providers in the industry with in-house anodizing capabilities.

FINISHING OPTIONS

- Mill
- Anodize
- Blasted
- Chromate
- Zinc Plating
- Powder Coat
- Electroplating

ALTERNATIVE PRODUCT FINISHES

We have invested in the resources to provide a high-quality product in a timely manner. Our metal finishing shop consists of dedicated personnel, equipment and space.

And we know that there are times you need an alternative finish for your product. Talk to a technician today; we also offer a range of special finishes from powder coating to electroplating and beyond.

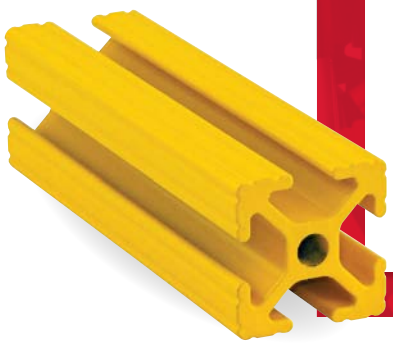

What is 80/20?

STANDARD MACHINING

80/20 has a wide range of standard machining services. These are cuts, drills and bores we make hundreds of times a day to your precise specifications. We have invested in top-of-the-line equipment and personnel to create a streamlined process for machining your products fast and accurately.

We have this down to a science; our large selection of standard machining services applies to all of our profiles, fasteners and accessories. We even have panel, wire mesh, and aluminum plate machining capabilities. This means high-quality, accurate products coupled with fast turn times.

DID YOU KNOW?

80/20 has over 500 standard machining services available to provide fast turn times.

CAPABILITIES FOR ALL SIZES

If you need one or one hundred parts machined, we have the capabilities to accommodate. Our equipment ensures precise cuts and drills so you receive your order just as you designed it. What's more, each part is visually inspected and measured for proper location and sizing of machining services. *(image of counterbore machining service to right)*

CUSTOM PACKAGING

When you need something beyond 80/20's standard packing for your order, we offer a custom packaging service. This service accommodates your more detailed and specific requirements. From bubble wrapping each profile, using unmarked boxes or labeling parts per your special instructions, we will work with you to fulfill your packing needs.

FOR YOUR SPECIFIC NEEDS

A popular option is our part-tagging service. This is ideal for orders with several bars of varying lengths or different machining services, or for large quantities that you need labeled alphanumerically to match the bill of materials. The parts will be separated and packaged together by type and the labels will be clear and easy to read.

As with all 80/20 orders, our packing is to the highest of standards. No matter the unique details of your requirements, your shipment will be properly hand-packaged to ensure a damage-free delivery.

POPULAR CUSTOM PACKAGE OPTIONS

- Part-Tagging
- Bubble Wrapping
- Individual Part Packing
- Unmarked Boxes
- Kit Packaging
- Bar Coding

What is 80/20?

Shipping Information

Our standard shipping time is the best in the T-slotted profile business.

Consider the following when deciding whether to buy pre-cut or full length profiles:

- **Freight costs and delivery schedules**
  Packages longer than 95" must ship via commercial carrier. Any package 95" or shorter can ship via UPS, which is usually substantially less expensive and has faster delivery schedules than commercial trucking.
- **Quality cuts and accurate lengths**
  When you purchase pre-cut profiles, you can expect to receive quality cuts and accurate lengths, washed and packed for shipping.
- **80/20® is centrally located for convenient UPS delivery from coast to coast**

Shipping Rate Information:

Most carrier rates are calculated based on weight and package dimensions. However, most trailers reach their volume capacity before their weight limit, the important factor is the density of the shipment. Standard rate classifications for 80/20® packaged profiles and panels start at rate class 60. This classification will vary due to the density of the shipment.

Aluminum Profile:
Freight Rate Classification: ≥ 60
Bill of Lading Description: aluminum profiles and parts

Plastic Panels:
Freight Rate Classification: ≥ 85
Bill of Lading Description: laminates in sheets

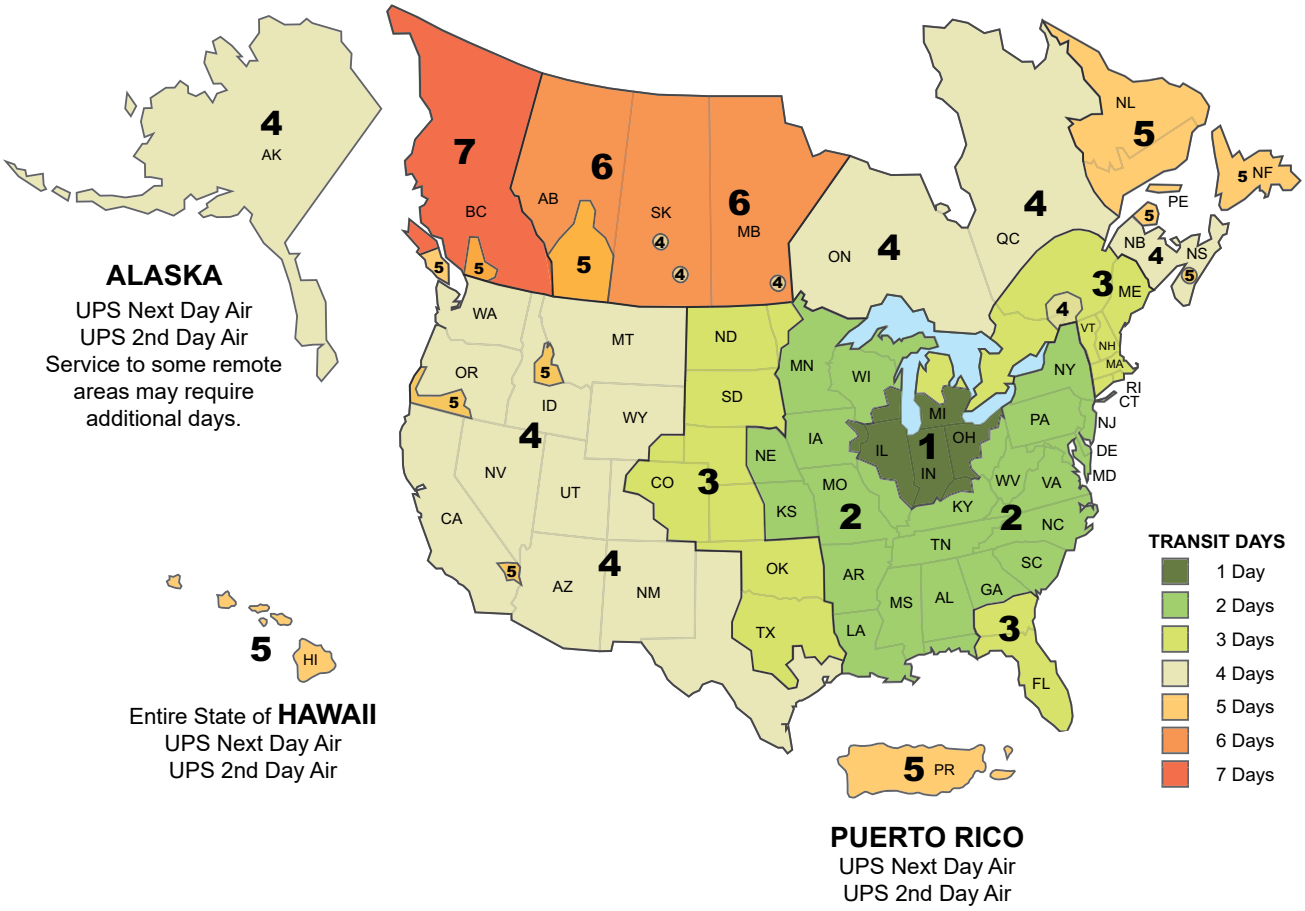

Shipping Information

You need communication, commitment and timely delivery of your orders. Superior quality, customer service, and fast shipping are the foundation of our business so we will always strive to ship your orders in less than our published timeframes. Your order is ready for processing once all drawings, worksheets and payment have been completed. **To see the latest shipping schedule, visit www.8020.net/shipping-information.**

Please note: All orders including 80/20 Builds services, custom machining or total $10,000 or more will have a scheduled lead time. All orders including non-stock black anodizes profiles or parts will have additional processing days added on top of the current in-house processing days.

Preferred Carriers

To ensure timely and safe delivery of your products 80/20 works with preferred carriers. They make daily scheduled pick-ups. If you have a transportation company you prefer to use and they are not on this list, we will work with you to accommodate.

Less-Than-Truckload (LTL) Carriers:		*Parcel Carriers:*
• TForce Freight	• YRC Freight	• UPS Ground
• Conway (XPO)	• ABF Freight	• FedEx Ground
• Old Dominion	• FedEx Freight	• FedEx Express

Damaged or Lost Shipments

UPS and Prepaid Truck Shipments:
Check your order immediately upon receipt. All damages must be noted on the packing slip and bill of lading. All shipping discrepancies must be reported to 80/20 LLC within 14 days of receipt of your order. Keep all damaged goods for inspection.

Truck or Expedited Freight (when you select the carrier):
Check your order immediately upon receipt. All damages must be noted on the packing slip and bill of lading. All shipping damages, discrepancies and shortages must be reported to the carrier you selected within 7 days of receipt of your order. Keep all damaged containers and goods for your carrier to inspect. File your claim with your carrier for the damages at that time.

Return Policy

Our guarantee is to provide you with the best customer support possible. If you are not completely satisfied with your recent purchase, we are here to assist you with your return. Any returns submitted after the 30 days is subject to a restocking fee. Additionally, returns are not accepted after 60 days from the date of receiving your products.

For our complete return policy process visit 8020.net/returns or scan the QR code.

What is 80/20?

Terms and Conditions of Sale

1. ORDER PLACEMENT. All goods and services furnished by 80/20, LLC ("80/20") are provided pursuant to these Terms and Conditions ("Terms and Conditions") whether provided following an order placed electronically, verbally, or on paper, whether the order is placed directly through 80/20 or through an 80/20 representative, and whether the order is placed following Buyer's review of 80/20's catalog or website, or following receipt of a Quotation only, or following the exchange of other documents (the catalog website Quotation and all other documents, hereafter, jointly, the "Quotation"). Acceptance by 80/20 of Buyer's order is expressly conditioned upon Buyer's acceptance of these Terms and Conditions, including those on the face of the Quotation, and any provisions of Buyer's order in conflict with these Terms and Conditions are expressly rejected. Buyer acknowledges that no representation or warranty other than those contained in this document have been made or relied upon. No additions or modifications shall be valid unless confirmed in writing by 80/20. 80/20 IS NOT BOUND TO FURNISH ITS GOODS OR SERVICES EXCEPT IN ACCORDANCE WITH THESE TERMS AND CONDITIONS.

2. PRICE/DELIVERY/DELAY. Prices for goods shall be those in effect on the date of invoice unless otherwise provided by the Quotation or agreed to in writing by 80/20. Unless otherwise provided on the face of the Quotation or agreed by 80/20 in writing, price and delivery terms shall be F.O.B. shipping point. Unless otherwise agreed in writing, 80/20 will select the route and manner of shipment, reserves the right to make delivery in installments when necessary, to invoice each installment separately, and to expect payment for each installment within 80/20's selling terms. All risks of loss or damage shall pass to Buyer at the place and time such goods are placed into the possession of the carrier or shipper, in accordance with the previously referenced F.O.B. shipping point term. Buyer shall be responsible for obtaining and paying for insurance to cover any loss to Buyer. Buyer shall pay 80/20 for the contract price in the event of loss of the goods. If Buyer fails to accept delivery according to the agreed upon delivery schedule, 80/20 may cancel the then remaining balance of the order. Such cancellation, if elected by 80/20, shall be in addition to, and not in lieu of, any other rights or remedies which 80/20 may have at law or equity. Prices are good for only quantities indicated. If shipment or any other act or condition affecting payment for the goods or any part of them shall be delayed on account of Buyer, payment shall be due as if shipment had been made, a reasonable storage charge may be made, and such storage shall be at the risk of Buyer. 80/20 shall not be liable for any direct, indirect, consequential, special, or incidental losses or damages to Buyer or to any third parties resulting from 80/20's delay in shipment regardless of cause, including but not limited to those causes set forth in the Force Majeure section of this document.

3. PRODUCT VARIANCE FROM PHOTOS. 80/20 attempts to provide accurate photographs of the products it offers for sale, but there may be some variation between the photographs and the actual products. Buyer may return any product if the variance is unacceptable to Buyer. Buyer must submit its request for return based on the product variation within thirty (30) days after receipt of the goods.

4. ACCEPTANCE. Goods furnished or services performed by 80/20 will be deemed to have been finally accepted thirty (30) days after receipt by Buyer, unless rightfully rejected within such period by written notice to 80/20, setting forth all of the defects upon which the rejection is claimed. Claims for factory damage or shortages shall not be considered unless made in writing within thirty (30) days after receipt of the goods or services and accompanied by reference to our bill of lading and invoice numbers. Buyer's claims for damage or shortage in transit must be filed by Buyer against carrier. Defective goods shall be held for 80/20's inspection or disposition. Buyer must note damaged goods or the appearance of probable damage with the freight carrier and on the relevant freight documents at the time of receipt.

5. 80/20 PROPERTY. All photographs, samples, descriptions, drawings or intellectual property provided by 80/20 to Buyer shall remain the property of 80/20 and shall only be used by Buyer to market 80/20 products to third parties. Buyer shall include in any materials incorporating 80/20 intellectual property, all copyright and trademark notices provided by 80/20. All such property shall be returned to 80/20 upon demand and any license created hereunder, implied or otherwise, is terminable at will by 80/20 and is hereby expressly terminated pursuant to Section 18 upon termination of this agreement.

6. RETURN POLICY. Buyer shall have no right to return any goods furnished by 80/20. 80/20 may, in its sole discretion, authorize Buyer to return goods. 80/20 may authorize the return of goods without charging a restocking charge, but in most cases, 80/20 will only authorize the return of goods subject to a restocking charge, the amount of which will depend on the type of goods being returned. The restocking charge shall be deducted from the amount refunded to Buyer.

7. TAXES. Prices do not include any federal, state or local taxes. Any applicable excise, import, sales, use or similar taxes, whether federal, state, provincial or local, and any transportation and other charges shall be the responsibility of and be paid by Buyer and, if paid by 80/20, Buyer agrees to reimburse 80/20 for any such payment and further agrees that 80/20 may add any such payments to the purchase price of the goods.

8. PAYMENT/CREDIT/SECURITY. Payment shall be due prior to shipment unless adequate credit remains on an account in good standing. All orders received are subject to credit approval. Buyer agrees to submit from time to time to 80/20 those items reasonably requested in order to establish or update Buyer's credit. 80/20 shall be entitled to charge interest on past due accounts at a rate of 1.5% per month (18% annually). Whenever 80/20, in good faith deems itself insecure, it may, without prejudice or waiving any other rights or remedies it may have at law or equity, cancel any outstanding orders with Buyer and/or hold production/shipment of any unfilled orders; modify or revoke its extension of credit to Buyer; and take any other steps permitted by law and necessary or desirable to secure 80/20 with respect to Buyer's payment of goods and services furnished or to be furnished. Buyer will pay 80/20's actual costs of collection, including but not limited to court costs, litigation expenses, and reasonable attorney's fees, incurred for collection of any delinquency. Title to the goods shall remain with 80/20 until Buyer receives physical possession of the goods and the goods are fully paid for by the Buyer. Buyer shall have no right of offset against amounts owed to 80/20.

9. QUALITY POLICY. 80/20 is dedicated to providing its products free of actual defects in material and workmanship. 80/20 will replace or repair, at 80/20's option, any product which, upon 80/20's inspection is found to have a defect in material and/or workmanship provided such defect is reported to 80/20 in writing within one (1) year of the date of the shipment from 80/20's factory ("Quality Policy"). 80/20 in no event shall be liable for indirect or consequential damages arising out of the use of 80/20 products. Components purchased by 80/20 from others for inclusion by 80/20 shall be warranted only to the extent of the guarantee or warranty, if any, made by the supplier of said component. No warranty is made by 80/20, express or implied, that 80/20 products as used in a customer's design and specifications are fit for that customer's specific purpose. Services performed by 80/20 will be conducted in a manner consistent with that level of care and skill ordinarily exercised by members of the industry currently practicing under similar conditions. As an independent contractor of Buyer, 80/20 will provide evaluation, advice, and guidance to Buyer, but Buyer recognizes that 80/20 is a technical contractor and not a professional consultant.

APART FROM THE ABOVE QUALITY POLICY, THERE ARE NO WARRANTIES, EXPRESS, IMPLIED, OR STATUTORY, INCLUDING, WITHOUT LIMITATION, WARRANTIES OF MERCHANTABILITY AND FITNESS FOR A PARTICULAR PURPOSE, WHICH EXTEND BEYOND THE DESCRIPTION ON THE FACE HEREOF.

80/20 expressly reserves the right to substitute materials in the products described in the catalogs and any supplements thereto; however, this shall not apply to special order products and/or custom products where 80/20 is advised in writing of specific material requirements and agrees in writing to comply with the requests for such specific materials. Any and all warranties shall be construed and enforced under the Laws of the State of Indiana.

10. INDEMNIFICATION. Buyer shall defend, indemnify and hold 80/20 harmless from and against any and all claims, liabilities, loss, costs, damage or expense (including reasonable attorneys' fees) of any kind or nature whatsoever relating to the performance by 80/20 hereunder, including without limitation, claims made for property damage or personal injury (including death), whether such claims are premised on contract or on tort (including, without limitation, strict liability). This indemnity provision shall not apply where such damage or injury is attributable solely to the negligence of 80/20, its employees or agents.

11. FORCE MAJEURE. 80/20 will not be liable for any delay in the performance of its obligation under this Quotation or for any damages suffered by the Buyer by reason of such delay, when such delay is directly or indirectly caused by or in any manner arises from: fires; floods; accidents; riots; acts of God; governmental interference; embargoes; strikes; labor difficulties; shortages of labor, fuel, power, materials or supplies; transportation delays; any existing or future laws or acts of the Federal or any State government (including specifically, but not exclusively, any orders, rules or regulations issued by any official or agency or any such government) affecting the conduct of 80/20's business; or any other cause or causes (whether or not similar in nature to any of those specified above) beyond 80/20's control, including but not limited to modifications to the fabricating specifications requested by the Buyer subsequent to commencement of production by 80/20.

12. NO WAIVER. The failure of 80/20 upon knowledge of any default or violation by Buyer of any of the Terms and Conditions of this Quotation, or any sales agreement entered into hereafter, to enforce its rights or remedies shall not be construed as a waiver of such default or violation, or of any provision hereof, or of any of its rights or remedies.

13. LIMITATION ON LITIGATION/ATTORNEY FEES. Any controversy or claim of Buyer arising out of or related to any transaction with 80/20 must be commenced within one (1) year after the cause of action has accrued. 80/20 shall be entitled to reimbursement of all costs and expenses, including reasonable attorneys' fees, from the Buyer relating to any lawsuit in which 80/20 prevails in any amount or on any claim.

14. ENTIRE AGREEMENT/LAW AND FORUM/SEVERABILITY. Except as otherwise agreed in writing or if another writing incorporates these terms thereby making these terms supplemental to such writing, this constitutes the entire agreement between 80/20 and Buyer, superseding all prior Quotations and understandings, oral or written. All such previous communications are hereby abrogated and withdrawn, and no stipulations, representations or agreements by 80/20, or its officers, agents, or employees shall be binding upon 80/20 unless reduced to writing and attached to and incorporated by reference herein, and no local, general, or trade custom shall alter or vary the terms hereof. Any questions, disputes, controversies, or litigation between 80/20 and Buyer, including but not limited to disputes concerning the validity, interpretation, or effect of the Quotation, or interpretation and enforcement of the rights and obligations of the parties hereunder, shall be governed by the laws of the State of Indiana and the exclusive venue for resolving any such questions, disputes, controversies, or litigation shall be a state or federal court located in Allen County, Indiana. If any provision of this Quotation is determined invalid under applicable law, such invalidity shall be limited to such provision without invalidating the remainder of the other Terms and Conditions hereof; and if any provision of this Quotation is found to be ambiguous or in conflict with any other provision of this Quotation, such ambiguity or conflict shall be resolved in the manner which provides the greatest protection and limitation of liability to 80/20.

15. INSURANCE. 80/20 will maintain Workers' Compensation insurance coverage at such levels as are required under the laws of the State of Indiana. 80/20 will purchase and maintain comprehensive general liability insurance against claims for personal injury or death or damage to property which may arise out of, or result from, 80/20's performance of the services in such amounts as 80/20 maintains in its ordinary course of business.

16. LIMITS OF LIABILITY. 80/20 will not be liable for any punitive damages or legal fees or any special, indirect, or consequential damages (including but not limited to loss of use or loss of profit) or fees which arise out of the performance of the services by 80/20. 80/20 and Buyer agree that absolutely no action arising out of the services may be brought by either party more than one year after substantial completion of the services. The entire liability of 80/20, or its officers, directors, agents, or employees, and Buyer's exclusive remedy for performance or nonperformance of the services shall be the adjustment or correction of the services by 80/20. If after repeated efforts, 80/20 is unable to adequately perform, Buyer shall be entitled to recover a pro-rata credit for the sums actually paid for the defective portion of the services.

17. TERMINATION OR CANCELLATION. Either party may terminate the services and all obligations arising under the proposal for the reason of the failure by the other party to comply with its obligations upon 30 days prior written notice to the other party. In the event of such termination, Buyer will pay to 80/20 all amounts which are due and payable to 80/20 for the services performed through the date of such termination. In addition, in the event the services are terminated as the result of the failure of Buyer to perform its obligations, Buyer will pay to 80/20 a termination charge of 20 percent of the cost of the remaining services to be performed by 80/20.

T-Slot Concept: Built-in Modularity

Page 2-4

T-slot Profile 2º Drop-Lock
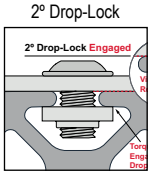

Page 2-5

Profile Family Types
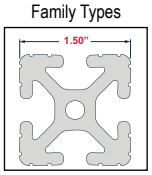

Page 2-6

Aluminum Profile Shape Types
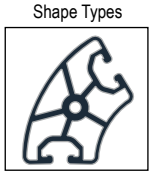
Page 2-7

Part Number Identification
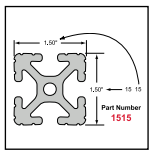

Page 2-8

Ready Tube Introduction

Page 2-12

Quick Frame Introduction

Page 2-13

Profile Chart
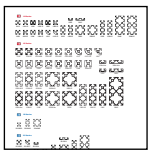
Page 2-14

10 Series T-slot Profiles

1010-S Profile

Page 2-16

1010 Profile

Page 2-16

1001-S Profile

Page 2-17

1001 Profile

Page 2-17

1002-S Profile

Page 2-18

1002 Profile

Page 2-18

1003-S Profile

Page 2-19

1003 Profile

Page 2-19

1004-S Profile

Page 2-20

1004 Profile

Page 2-20

1012-S Profile

Page 2-21

1012 Profile

Page 2-21

1050 Profile

Page 2-22

2012 Profile

Page 2-23

1020-S Profile

Page 2-24

1020 Profile

Page 2-25

1030-S Profile

Page 2-26

1030 Profile

Page 2-27

2020-S Profile

Page 2-28

2020 Profile

Page 2-29

2040-S Profile

Page 2-30

2040 Profile

Page 2-31

15 Series T-slot Profiles

1515-ULS Profile

Page 2-32

1515-UL Profile

Page 2-32

1515-LS Profile

Page 2-33

1515-Lite Profile

Page 2-33

1515-S Profile

Page 2-34

1515 Profile

Page 2-34

1501-LS Profile
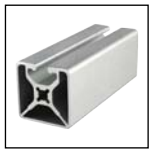
Page 2-35

1501 Profile
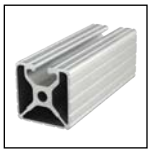
Page 2-35

1502-LS Profile
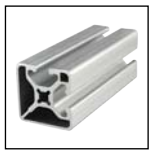
Page 2-36

1502 Profile

Page 2-36

1503-LS Profile

Page 2-37

1503 Profile

Page 2-37

1504-LS Profile

Page 2-38

1504 Profile
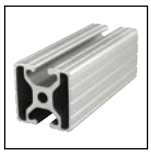
Page 2-38

1547 Profile

Page 2-39

1517-LS Profile

Page 2-39

1517 Profile

Page 2-40

1575 Profile

Page 2-41

1534-Lite Profile

Page 2-41

3075 Profile

Page 2-42

3034-Lite Profile

Page 2-43

1530-ULS Profile

Page 2-44

1530-UL Profile

Page 2-45

1530-LS Profile

Page 2-46

Profiles

15 Series T-slot Profiles

1530-Lite Profile
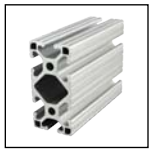
Page 2-47

1530-S Profile

Page 2-48

1530 Profile
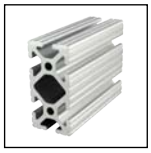
Page 2-49

1545-LS Profile
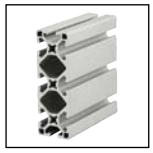
Page 2-50

1545-S Profile
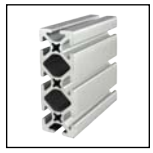
Page 2-51

1545 Profile

Page 2-52

3030-LS Profile

Page 2-53

3030-Lite Profile

Page 2-54

3030-S Profile

Page 2-55

3030 Profile
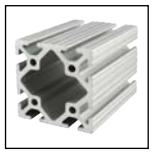
Page 2-56

3060 Profile
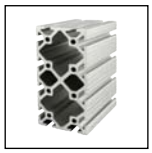
Page 2-57

20 Series T-slot Profiles

20-2020 Profile

Page 2-58

20-2040 Profile

Page 2-59

20-4040 Profile

Page 2-60

25 Series T-slot Profiles

25-2525 Profile

Page 2-61

25-2501 Profile

Page 2-61

25-2502 Profile
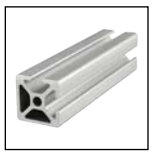
Page 2-62

25-2503 Profile

Page 2-62

25-2504 Profile

Page 2-63

25-2527 Profile

Page 2-63

25-2514 Profile

Page 2-64

25-5013 Profile

Page 2-65

25-2550 Profile
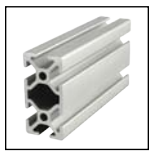
Page 2-66

25-2576 Profile

Page 2-67

25-5050 Profile

Page 2-68

25-5010 Profile

Page 2-69

30 Series T-slot Profiles

30-3030 Profile

Page 2-70

30-3001 Profile

Page 2-70

30-3002 Profile

Page 2-71

30-3003 Profile

Page 2-71

30-3004 Profile

Page 2-72

30-3022 Profile

Page 2-72

30-3060 Profile
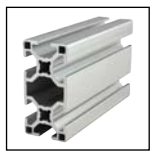
Page 2-73

30-6060 Profile

Page 2-74

40 Series T-slot Profiles

40-4040-UL Profile

Page 2-75

40-4040-Lite Profile

Page 2-75

40-4040 Profile

Page 2-76

40-4001 Profile
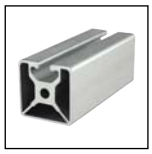
Page 2-76

40-4002 Profile
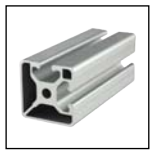
Page 2-77

40-4003 Profile

Page 2-77

40-4004 Profile

Page 2-78

40-4030-Lite Profile

Page 2-78

40-4045-Lite Profile

Page 2-79

40-4093 Profile

Page 2-80

40-4094 Profile

Page 2-80

40-4096 Profile

Page 2-81

40-4020 Profile

Page 2-82

40-8020 Profile

Page 2-83

40-4080-UL Profile
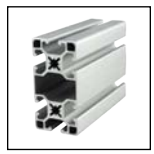
Page 2-84

40-4080-Lite Profile
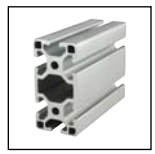
Page 2-85

40-4080 Profile

Page 2-86

40-4082-Lite Profile

Page 2-87

40-4083-Lite Profile
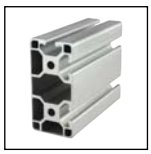
Page 2-88

40-4084-Lite Profile
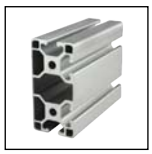
Page 2-89

40-4085-Lite Profile
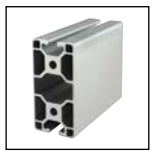
Page 2-90

40-4012 Profile

Page 2-91

40-8080 Profile

Page 2-92

40-8016 Profile

Page 2-93

45 Series T-slot Profiles

45-4545-Lite Profile

Page 2-94

45-4545 Profile

Page 2-94

45-4590 Profile

Page 2-95

45-9090 Profile

Page 2-96

Ready Tube® Profiles

9700 Profile

Page 2-97

9701 Profile

Page 2-97

9705 Profile
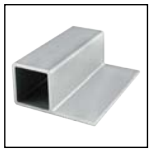
Page 2-98

9706 Profile

Page 2-98

9725 Profile
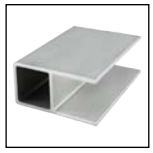
Page 2-99

9726 Profile

Page 2-99

9728 Profile

Page 2-100

Quick Frame® Profiles

9000 Profile

Page 2-101

9005 Profile
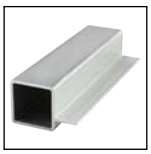
Page 2-101

9010 Profile

Page 2-102

9015 Profile
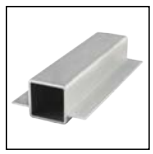
Page 2-102

9025 Profile

Page 2-103

9030 Profile
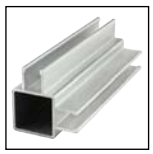
Page 2-103

9035 Profile
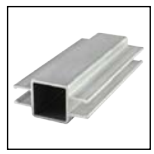
Page 2-104

T-slot Profiles

Picking Your Profile

Typically, it's easiest to start by deciding on your profile series. Think about the end purpose of your application to help you narrow down your search for the profile that fits your needs. 80/20 offers profile series in both the fractional and metric family that accommodate the entire scale of small, medium, and large builds.

Your profile should be determined by deciding on the scale, weight, strength, surface (smooth, grooved), open T-slot requirements, color, finish, and shape that you need.

Throughout planning your project, you'll want to be sure all of the subsequent products, such as your fasteners and accessories, are compatible with the profile series you've chosen. Just look for the appropriate icon when shopping.

COMPATIBILITY KEY

F Fractional	M Metric	30 30 Series
10 10 Series	20 20 Series	40 40 Series
15 15 Series	25 25 Series	45 45 Series
RT Ready Tube®	QF Quick Frame®	

The T-slot Concept: Built-in Modularity

T-slot aluminum profiles offer several benefits. The shape of the profile creates modularity, meaning it is easily assembled and reassembled to conform to evolving needs.

The T-slot also provides the ability to add connections and join profiles to captivated ends. This allows you to change your design without having to start from scratch and also enables easy expansion and retraction of your build for changes down the road.

The T-slot profile concept is designed to allow movement while staying secure within the T-slot.

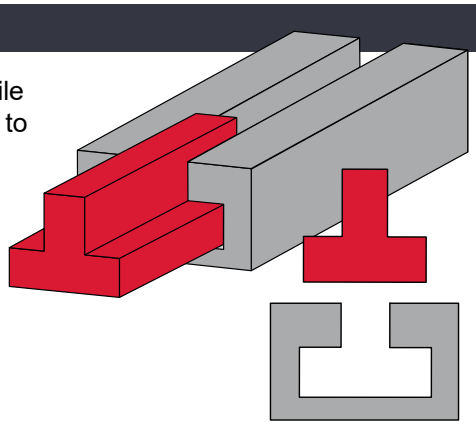

The T-slot Profile 2° Drop-Lock

Another important attribute of T-slot aluminum profiles is the strong connection made between profiles. 80/20's T-slot aluminum profiles include a 2 degree drop-lock feature for most profiles, which enables connections to remain vibration resistant and strong. 80/20 offers a wide variety of joining options to fit your specific needs (for an overview on fastening products flip to page 3-6).

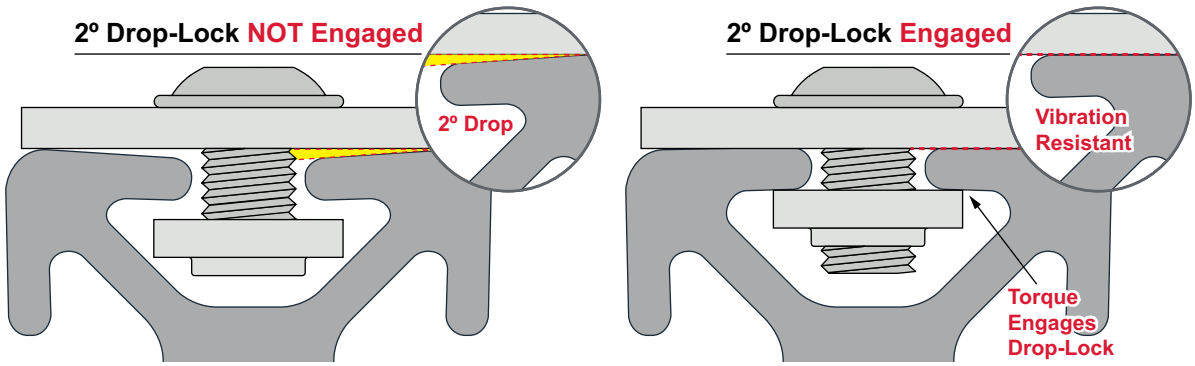

The Battle of Aluminum vs Steel

Think about the fact that, volume for volume aluminum is one third the weight of iron, steel, copper or brass. Yet it has yield strength of 35,000 psi, which means it is comparable to A36 steel carbon (frequently used in applications such as equipment and machinery supports as well as building frames). Furthermore, aluminum is resilient and can flex under loads or reshape itself after the shock of impact.

T-slot Profiles

Profile Family Types

Fractional

The fractional T-slot family uses an inch measurement system (imperial). 80/20 currently offers two standard series; the 10 series and the 15 series. 10 series profiles are based on a 1 inch standard while 15 series profiles are based on a 1.5 inch standard.

Align-a-groove options are featured on both 10 series and 15 series T-slot profiles, aid in aligning and squaring corners and joints during assembly. Align-a-grooves are not available in metric profiles.

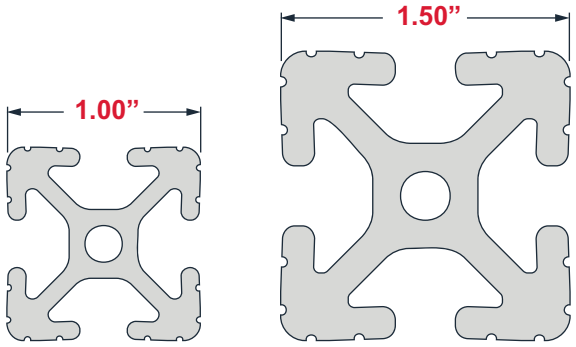

Metric

The metric T-slot family is measured in meters or millimeters (mm). 80/20 currently offers five series in metric units; 20, 25, 30, 40 and 45. The dimensions of the metric profiles each coincide with the series; for instance, 20 series profiles are based on a 20mm standard, 25 series are based on a 25mm standard, 30 series profiles are based on a 30mm standard and etc.

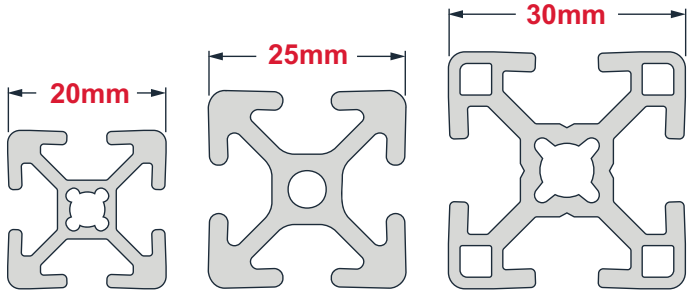

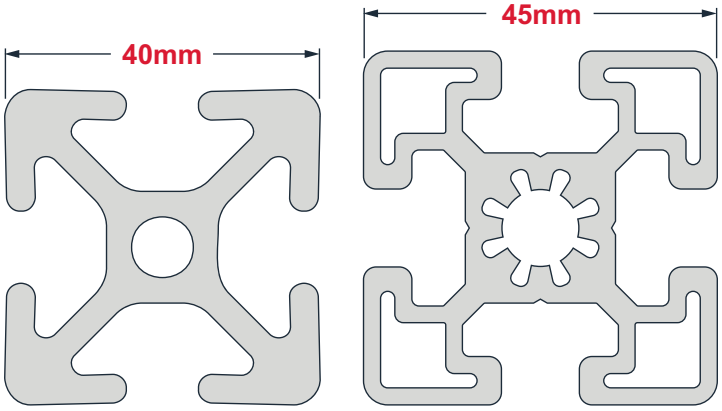

Need to Know
80/20 currently offers both metric and fractional T-slotted profiles with over 100 profiles available across 7 series types.

After you have decided which measurement system you are going to use, you'll want to decide on a specific profile series. Think about the weight and strength you will need, as well as the shape and open T-slots you want available.

Consider your application and its purpose to help you narrow down your search for the profile that fits your need. 80/20 offers profile series in both the fractional and metric family to accommodate small, medium, and large-scale builds. A prototype project is an example of a small-scale build while a desk or workstation is an example of a medium-scale build. Profiles used for structural framing would be an instance of a large-scale project.

80/20 BUILD YOUR IDEA
More on 80/20® products available at 8020.net

The Shape of a Profile

Once you have determined a series that matches the scale of your build, you are ready to choose the shape of your profile. The shape of the profile affects certain properties such as aesthetics and open T-slots. The available shapes are square, rectangle, angled, and radius.

Square

In both the fractional and metric measurement families, 80/20 offers six different square profile shapes. This variety gives you choices to accommodate appearance, accessories and parts. For medium to large-scale applications consider a square profile with eight T-slot openings to allow a multitude of connection points for the addition of profiles and accessories. Some square profiles also include the capability of a pressurized center cavity.

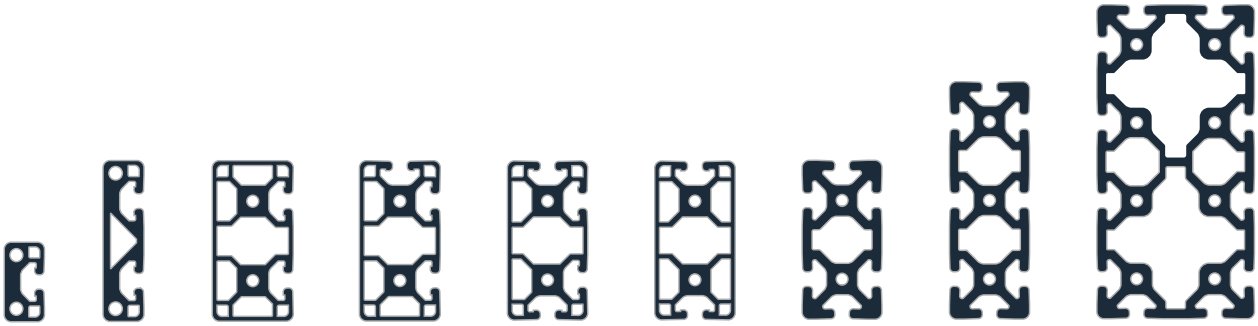

Rectangle

Between the fractional and metric measurement families there are nine rectangle profile shapes and all work well for joining other profiles, parts and accessories. Most rectangular profiles have the capacity for a pressurized center cavity. The twelve-slot rectangle profile is perfect for large-scale purposes, such as load-bearing applications, and offers the most mounting and joining options.

Radius & Angle

Angled and radius profiles come with 2 open T-slots and are frequently used for panel mounting and exhibits due to their versatility and sleek appearance. The rounded shape of radius profiles works well as hand rails.

T-slot Profiles

Part Number Concept & Identification

Most fractional and metric T-slot profiles have part numbers that directly coincide with the profile's physical measurements. Fractional profile part numbers contain four characters. Metric profile part numbers contain six characters, which relate to the profile's series and dimensions. This series part-numbering concept is explained in more detail below.

Fractional Profile Naming Standards

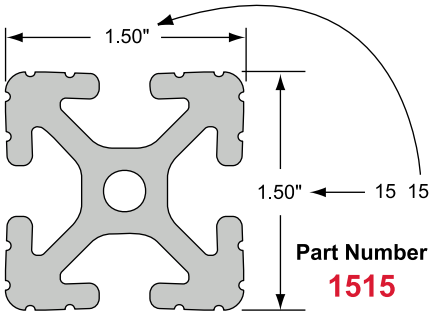

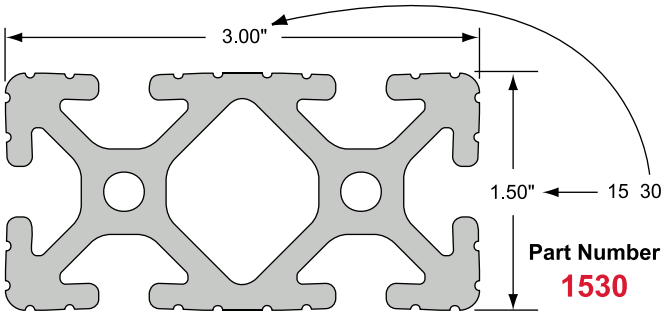

Example: 15 series profiles always measure .75" from the outside edge of the profile to the center of the T-slot.

Metric Profile Naming Standards

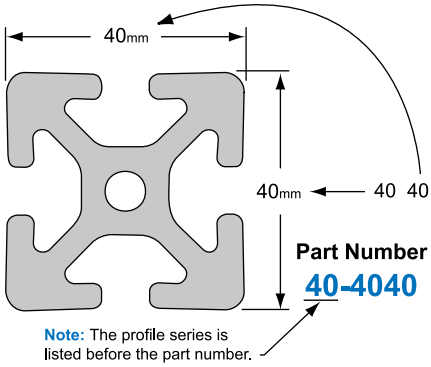

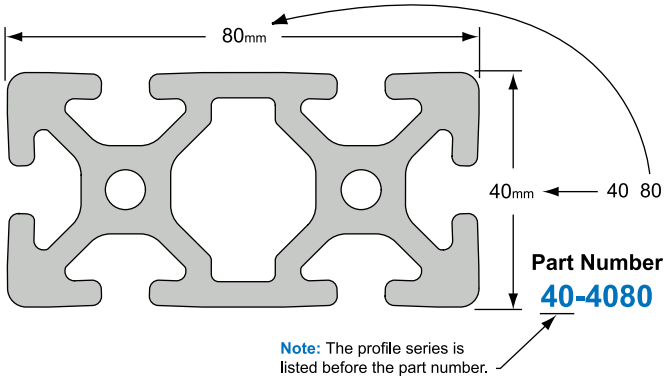

Example: 40 series profiles always measure 20.00mm from the outside edge of the profile to the center of the T-slot.

Basic Concept
The dimensions of your profile usually spell out its part number.

80/20 BUILD YOUR IDEA
More on 80/20® products available at 8020.net

Black Anodize

80/20 offers over 1,000 black anodized profiles and parts for your custom designs; these are stocked in-house to provide fast and easy access. We use architectural and organic anodizing processes and both meet Military Spec 8625.

You'll find that black anodize makes your projects look sleek while also providing functionality. Black anodize is ideal for low reflective projects, photo booths, military applications, vision systems and anywhere you want to add a polished appearance.

Need to Know
When ordering black anodized products with machining services, these areas will be exposed, meaning not black. If you would like your profiles or parts completely black, including the machined areas, we can accommodate. Contact us for more details.

Why 6005A-T61 Aluminum Alloy?

All of 80/20's T-slot profiles are made of 6005A-T61 or comparable alloy, an aluminum extrusion alloy that is a metal mixture which includes other elements such as copper, magnesium, iron, silicon or zinc.

Certain properties such as strength, machinability and corrosion resistance are influenced by the choice of alloy and temper.

Alloy 6005A with a T61 temper has better machinability and strength than 6063-T6.

6005A ↑ **Alloy**

T61 ↑ **Temper**

	Tensile Strength - ksi*	
Aluminum Profile Alloys: Number and Characteristics	Ultimate minimum	Yield minimum
6005A-T61 (80/20's Alloy)	38.00	35.00
6063-T6	30.00	25.00

Figures based on material thickness of 0.125" to 1.00"
From The Aluminum Extrusion Manual, published by The Aluminum Association and the Aluminum Extruders Council.

Material Strength Specifications

Minimum Yield Strength In Pounds

- 80/20's 6005A-T61 alloy yield strength of 35,000 psi compares to A36 carbon steel's yield strength of 36,000 psi.
- Volume for volume, aluminum weighs about 1/3 as much as iron, steel, copper, or brass.

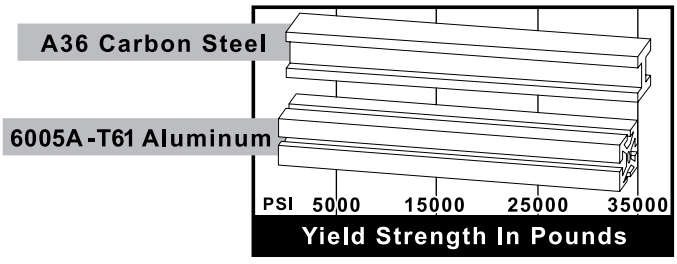

T-slot Profiles

Simple Beam Deflection Calculations

Formula A

$$\frac{L^3 \cdot W}{48 \cdot E \cdot I} = D$$

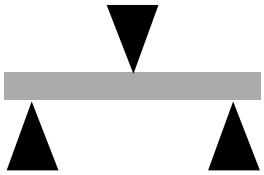

This formula will yield worst case deflection for a beam supported at both ends with the load centered over the span.

Formula B

$$\frac{5L^3 \cdot W}{384 \cdot E \cdot I} = D$$

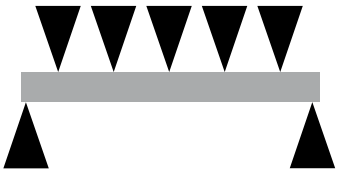

This formula will yield worst case deflection for a beam supported at both ends with the load evenly distributed over the span.

Formula C

$$\frac{L^3 \cdot W}{3 \cdot E \cdot I} = D$$

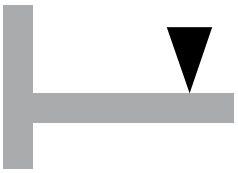

This formula will yield worst case deflection for a beam fastened at one end and cantilevered horizontally with the load applied at the end of the beam.

Example Using Formula A:
Using the 1515 T-slot profile, a length of 30.00 inches, and an applied force of 50 pounds, you should find the approximate beam deflection to be .011 inches. Using the 40-4040 T-slot profile, a length of 762mm, and an applied force of 222.40 Newtons, you should find the approximate beam deflection to be .21mm.

Formula Reference:

L = Length in Inches
W = Load in Pounds
I = Moment of Inertia
E = Modulus of Elasticity
D = Deflection in Inches

T-Slot Profile Specifications

Fractional		Metric
35,000 p.s.i. (min)	Yield Strength	241.1 N/mm² (min)
38,000 p.s.i. (min)	Tensile Strength	262.0 N/mm² (min)
A5 minimum 10%	Elongation	A10 minimum 8%
10,200,000 lb/in.²	Elasticity E	70,326.5 N/mm²
Rockwell approximately E-88	Hardness	Brinell approximately 75 HB
.004" per 1 inch of width	Flatness	0.1mm per 25.4mm of width
0.0125 inches per 1 foot of length not to exceed 0.118 inches over 20 feet of length	Straightness	0.32mm per 304mm of length, not to exceed 3mm over 6.1 m of length
Per 1 foot of length not to exceed .25 degree and total twist over 20 feet of length not to exceed 1.5 degrees	Twist	Per 304mm of length not to exceed .25 degree and total twist over 6.1m of length not to exceed 1.5 degrees

Note: Extrusion conforming to DIN 17 615 specifications. Unless otherwise specified, all profiles will have etch and clear (MIL-A-8625F) anodizing with depth of .0004 inches (0.010mm) and surface hardness of approximately 250 HV (anodized profiles should not be welded because of toxic fumes).

80/20 BUILD YOUR IDEA
More on 80/20® products available at 8020.net

Torque Specifications

The tables below show the amount of torque in foot-lbs. and newton meters required to activate the 2 degree drop-lock feature for t-slotted profiles. Nut and bolt combination is preloaded when tightened to the minimum torque rating.

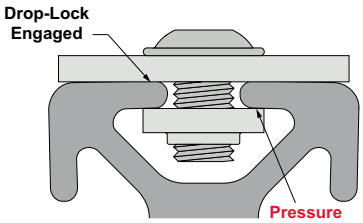

Fractional T-slot Profiles

Part Number	Fastener Description	Tested Profile	Minimum Torque Ft-lbs.	Maximum Torque Ft-lbs.
3320	5/16-18 x 11/16 Flanged BHSCS & Economy T-Nut	1515	10.00	15.00
3325	5/16-18 x 3/4 Economy T-Slot Stud, Washer & Hex Nut	1515	25.00	30.00
3360	15 Series Anchor Fastener Assembly	1515-Lite	10.00	20.00
3380	15 Series End Fastener Assembly	1515-Lite	10.00	22.00
3321	1/4-20 x 1/2 Flanged BHSCS & Economy T-Nut	1010	4.00	6.00
3395	10 Series Anchor Fastener Assembly	1010	3.00	17.00
3381	10 Series End Fastener Assembly	1010	4.00	17.00

Metric T-slot Profiles

Part Number	Fastener Description	Tested Profile	Minimum Torque Newton Meters	Maximum Torque Newton Meters
75-3422	M8 x 16mm BHSCS & Economy T-Nut	40-4040	13	20
75-3500	M8 x 20mm Economy T-Slot Stud, Washer & Hex Nut	40-4040	40	54
40-3897	40 Series Anchor Fastener Assembly	40-4040-Lite	13	37
40-3891	40 Series End Fastener Assembly	40-4040-Lite	13	29
75-3404	M6 x 10mm BHSCS & Economy T-Nut	25-2525	5	8
25-3896	25 Series Anchor Fastener Assembly	25-2525	4	23
25-3895	25 Series End Fastener Assembly	25-2525	5	23

The estimated torque calculations in this chart are offered as a guide only. Use of this content by anyone is the sole responsibility of that person and they assume all risk. Due to many variables that affect the torque-tension relationship like human error, surface texture, and lubrication the only way to determine the correct torque is through experimentation under actual joint and assembly conditions.

Fastener Application Test

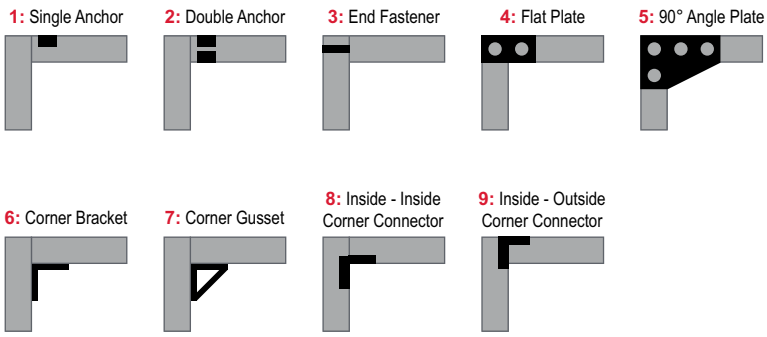

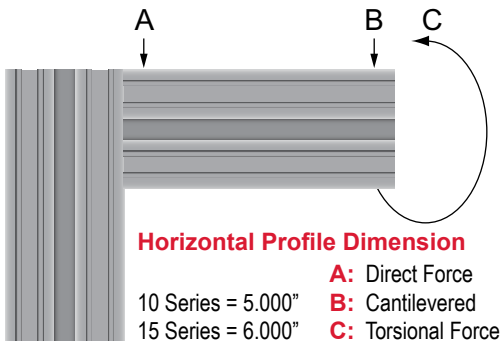

Fastener	1010 Profile			1515-Lite Profile			1515 Profile		
	A (lbs)	B (lbs)	C (Inch-lbs)	A (lbs)	B (lbs)	C (Inch-lbs)	A (lbs)	B (lbs)	C (Inch-lbs)
1	500	250	180	950	625	540	950	1,000	700
2	900	250	260	1,200	700	1,150	1,200	1,200	2,000
3	450	200	325	1,000	500	680	1,000	820	1,150
4	175	50	400	225	200	1,000	225	200	1,100
5	175	50	500	250	200	1,120	250	200	1,260
6	325	75	180	375	225	500	575	225	500
7	325	220	260	375	750	500	575	750	500
8	—	—	—	50	50	50	—	—	—
9	—	—	—	240	220	240	—	—	—

Ready Tube® Profiles

Introduction to Ready Tube®

Ready Tube is an alternative to steel tubular framing; it is lightweight yet strong and durable. Ready Tube is also corrosion resistant, easy to assemble and cost-effective. Ready Tube is appropriately named; it is ready to use without the need for additional machining.

Ready Tube is available with or without pre-drilled holes. Profiles with pre-drilled holes have 1.50" centerlines between holes, which enables quick and easy connections.

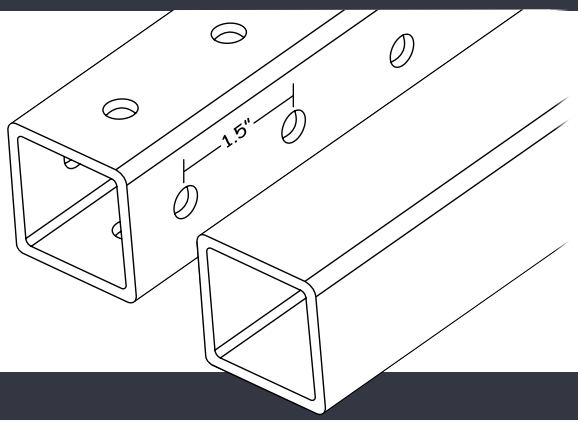

How Ready Tube Works

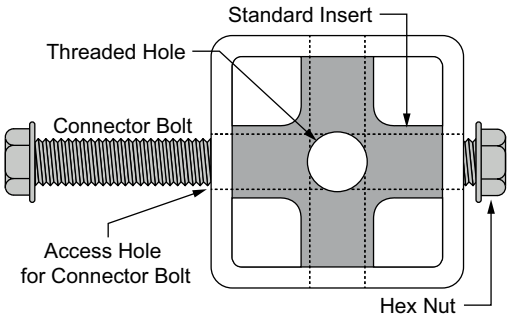

The most commonly used fastener for Ready Tube is the Standard Tube Insert which requires only a wrench to connect. It includes a connector bolt, hex nut and insert that goes inside the Ready Tube profile and is accessed by the pre-drilled holes. 80/20 does offer additional fasteners for Ready Tube; for more information flip to page 3-205.

Only need a wrench!

Ready Tube Step-by-Step Assembly

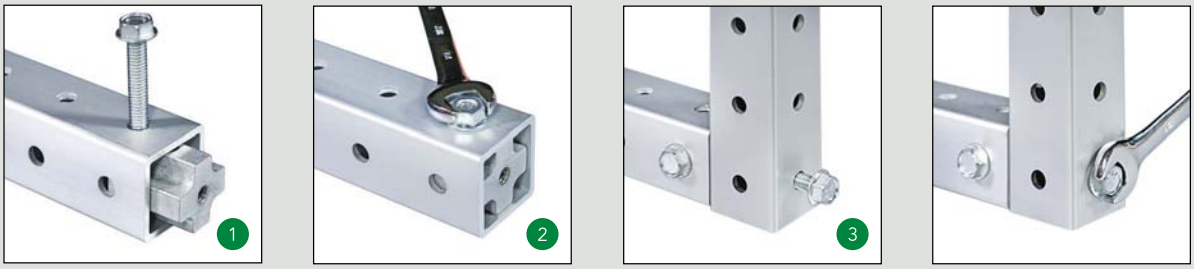

The Shapes of Ready Tube

The properties of Ready Tube make it perfect for evolving and changing applications. It works well in builds such as workstations, tables, carts, flow racks, and material handling shelving and racks. When using Ready Tube in your build you have 3 main profile options; square, P-tube, and A-tube.

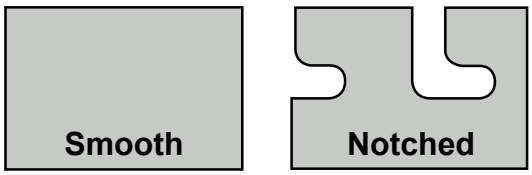

Square Ready Tube profiles are easy to clean and aesthetically appealing, while P-tube profiles have flanges that work well for holding panels. A-tubes are available with or without notches and are perfect for applications such as gravity racks or material handling shelves.

80/20 BUILD YOUR IDEA
More on 80/20® products available at 8020.net

QF Introduction to Quick Frame®

Quick Frame is an alternative to steel tubular framing and wood construction. It is simple to use, lightweight and can help reduce your product cost. Quick Frame requires few parts for assembly and connects with just one tool. It is a boltless method that fastens with nylon tube inserts. This means that Quick Frame does exactly what its name implies; connects quickly to form light yet sturdy builds.

How Quick Frame Works

Quick Frame profiles are designed specifically to work with Quick Frame connectors; they have built-in ridges that bite into the connector to create tension without the use of hardware. The profiles connect quickly and easily using only a soft-faced mallet to form light-duty yet sturdy builds.

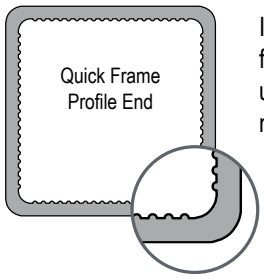

Internal grooves in the Quick Frame profile hold connector in place without the use of additional hardware. A soft-faced mallet is all that is required for assembly.

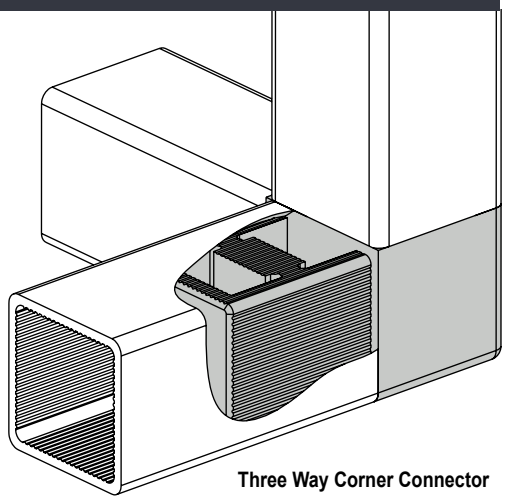

Three Way Corner Connector

Quick Frame Step-by-Step Assembly

The Shapes of Quick Frame

There are 3 main shapes when it comes to Quick Frame; square, flanged, and twin flanged. Square profiles hinder dirt and debris buildup and are easy to clean while single flanged profiles are perfect for building doors or adding panels. Twin flanged profiles hold panels in place for vertical applications such as enclosures.

Need to Know
Quick Frame is a light-duty alternative to its heavier steel counterpart, with options for flanged ends to hold guarding.

Within both the flanged and twin flanged shapes you can choose from either a single flange, a right angle flange or a double flange, allowing you to find the specific Quick Frame profile perfect for your build.

T-slot Profiles

Profile Chart

10 Series

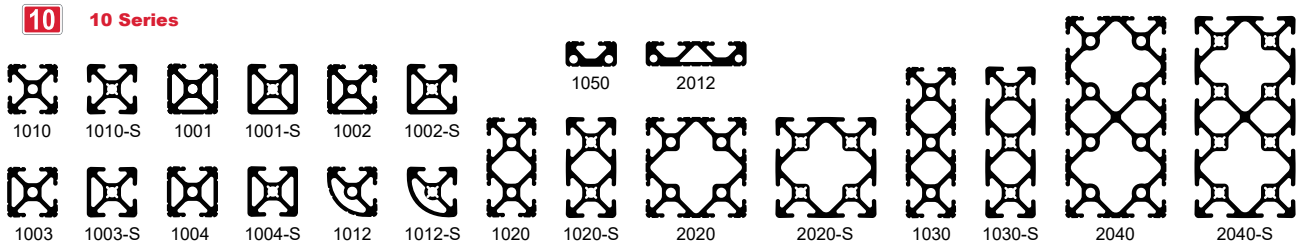

15 Series

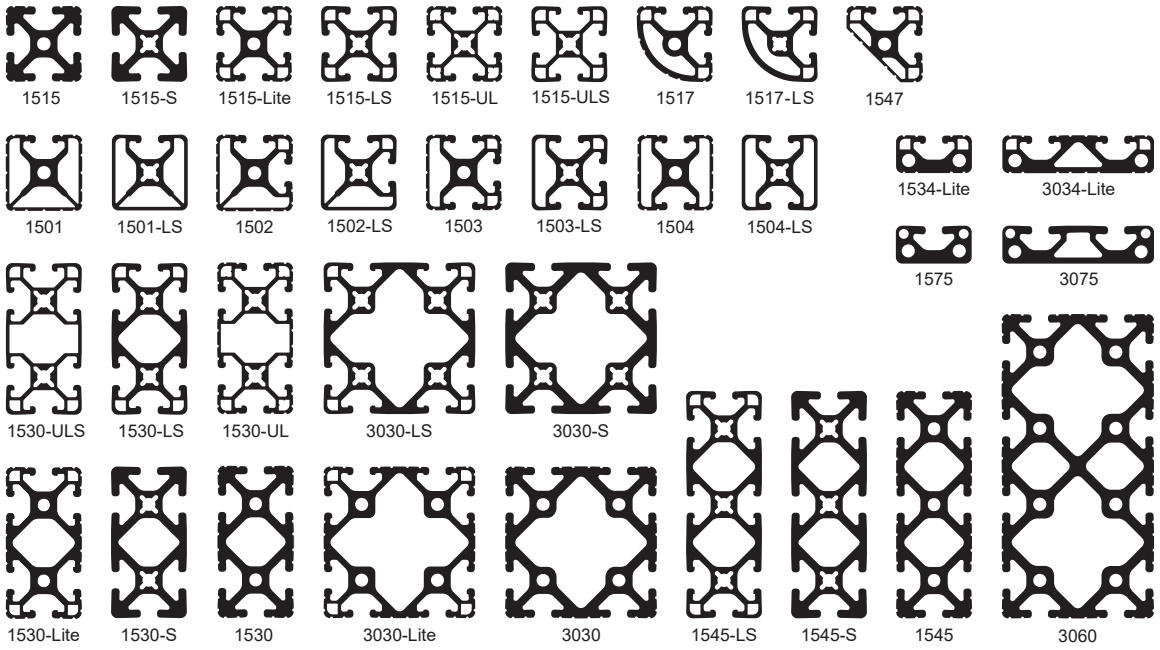

20 Series

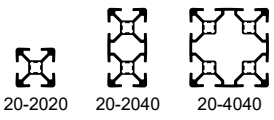

25 Series

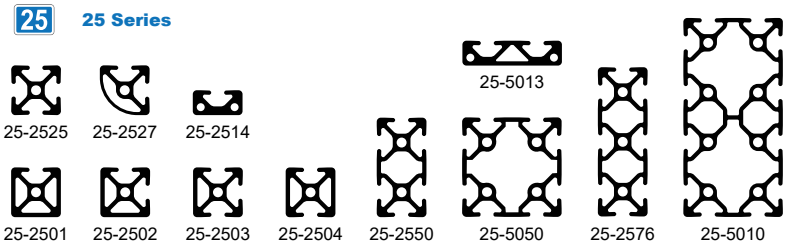

80/20 BUILD YOUR IDEA
More on 80/20® products available at 8020.net

Profile Chart

30 Series

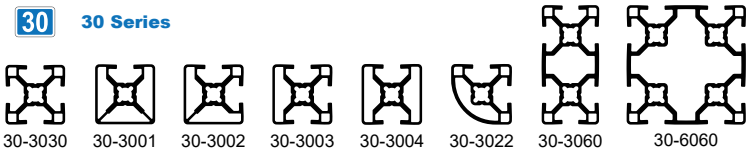

40 Series

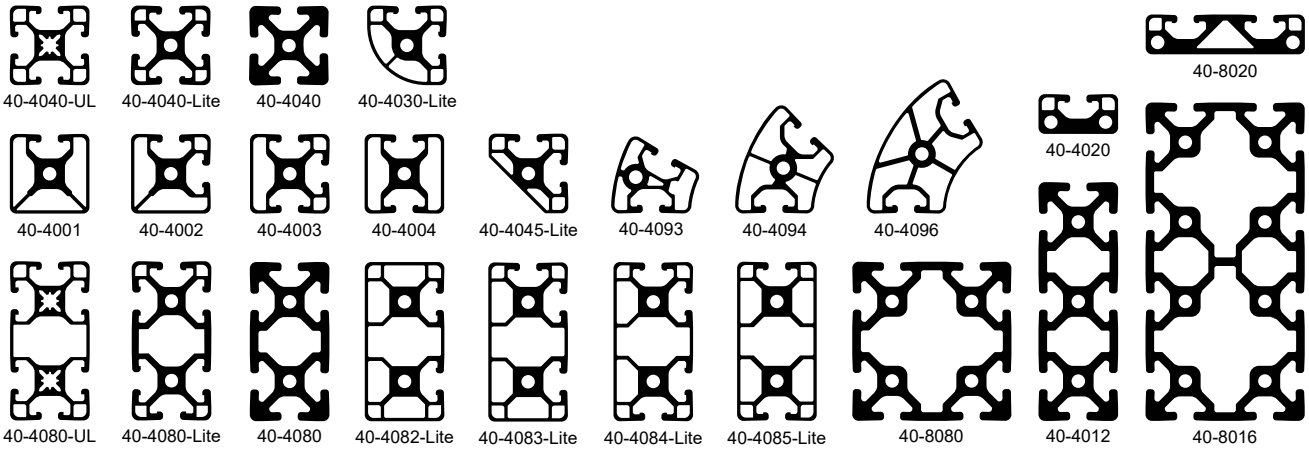

45 Series

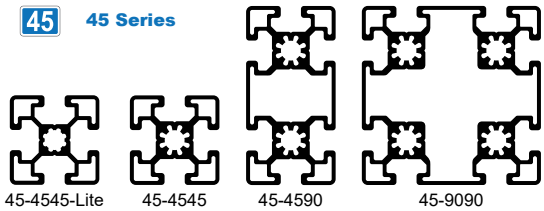

Quick Frame

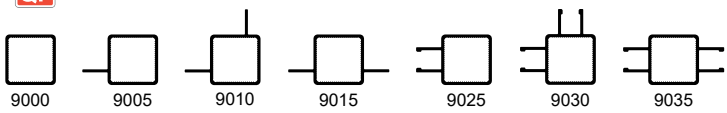

Ready Tube

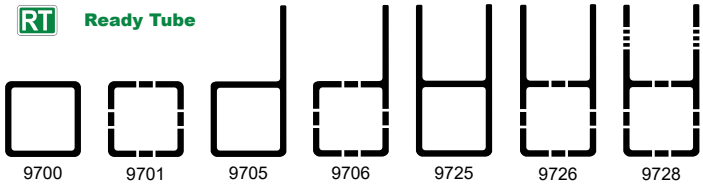

T-slot Profiles

1.00" X 1.00" Smooth Surface T-slotted Profile - Four Open T-slots

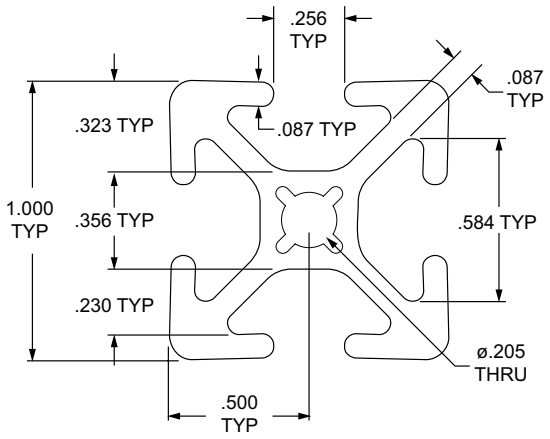

Part No.	Series	Stock Length	Material	Alloy (or comparable)	Finish	Drop Lock	Moment of Inertia	Surface Area	Yield Strength	Modulus of Elasticity	Weight
1010-S	10	120", 242"	Aluminum	6005A – T61	Clear Anodize	2°	IX = 0.0463"⁴ IY = 0.0463"⁴	0.437 in.²	35,000 psi	10,200,000 lb / in.²	0.0424 lb / in.
1010-S-Black-FB		per inch			Black Anodize						

1.00" X 1.00" T-slotted Profile - Four Open T-slots

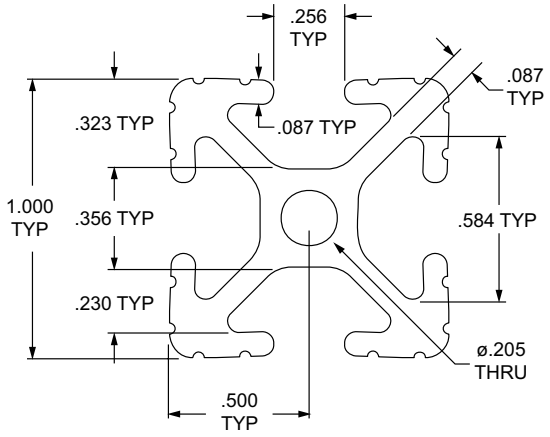

Part No.	Series	Stock Length	Material	Alloy (or comparable)	Finish	Drop Lock	Moment of Inertia	Surface Area	Yield Strength	Modulus of Elasticity	Weight
1010	10	120", 242"	Aluminum	6005A – T61	Clear Anodize	2°	IX = 0.0442"⁴ IY = 0.0442"⁴	0.435 in.²	35,000 psi	10,200,000 lb / in.²	0.0424 lb / in.
1010-Black		120", 242"			Black Anodize						
1010-Black-FB		per inch			Black Anodize						
1010-Yellow		120", 242"			Yellow Powder Coat						

Standard Machining Services for 1.00" x 1.00"

Service No.	Series	Service Description	Reference Page
7005	10	Cut to Length	10-2
7051		Access Hole	10-5
7042		Anchor Counterbore	10-7
7061		Tap Profile End	10-3

Other machining services available in Section 10

80/20 BUILD YOUR IDEA
More on 80/20® products available at 8020.net

1.00" X 1.00" Smooth Surface T-slotted Profile - Single Open T-slot

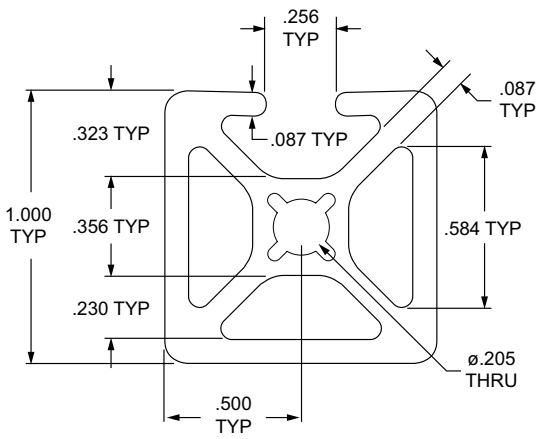

Part No.	Series	Stock Length	Material	Alloy (or comparable)	Finish	Drop Lock	Moment of Inertia	Surface Area	Yield Strength	Modulus of Elasticity	Weight
1001-S	10	120", 242"	Aluminum	6005A – T61	Clear Anodize	2°	IX = 0.0562"⁴	0.437 in.²	35,000 psi	10,200,000	0.0493 lb / in.
1001-S-Black-FB		per inch			Black Anodize		IY = 0.0517"⁴			lb / in.²	

1.00" X 1.00" T-slotted Profile - Single Open T-slot

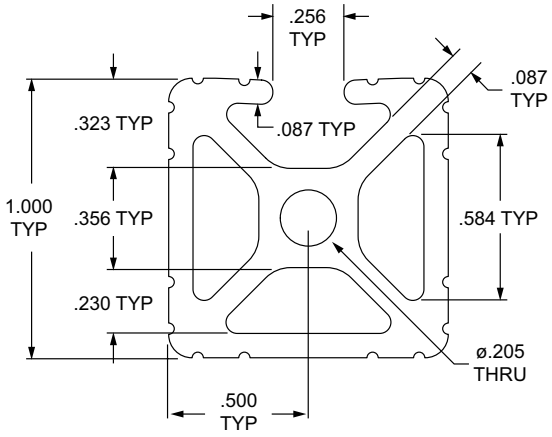

Part No.	Series	Stock Length	Material	Alloy (or comparable)	Finish	Drop Lock	Moment of Inertia	Surface Area	Yield Strength	Modulus of Elasticity	Weight
1001	10	120", 242"	Aluminum	6005A – T61	Clear Anodize	2°	IX = 0.0493"⁴	0.506 in.²	35,000 psi	10,200,000	0.0493 lb / in.
1001-Black-FB		per inch			Black Anodize		IY = 0.0542"⁴			lb / in.²	

Standard Machining Services for 1.00" x 1.00"

Service No.	Series	Service Description	Reference Page
7005	10	Cut to Length	10-2
7051		Access Hole	10-5
7042		Anchor Counterbore	10-7
7061		Tap Profile End	10-3

Other machining services available in Section 10

T-slot Profiles

1.00" X 1.00" Smooth Surface T-slotted Profile - Two Adjacent Open T-slots

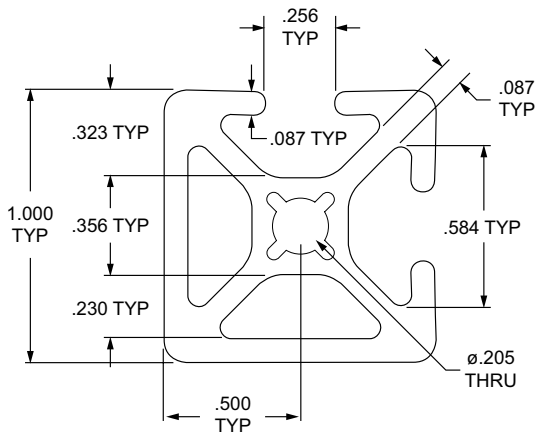

Part No.	Series	Stock Length	Material	Alloy (or comparable)	Finish	Drop Lock	Moment of Inertia	Surface Area	Yield Strength	Modulus of Elasticity	Weight
1002-S	10	120", 242"	Aluminum	6005A – T61	Clear Anodize	2°	IX = 0.0518"⁴	0.484 in.²	35,000 psi	10,200,000 lb / in.²	0.0470 lb / in.
1002-S-Black-FB		per inch			Black Anodize		IY = 0.0518"⁴				

1.00" X 1.00" T-slotted Profile - Two Adjacent Open T-slots

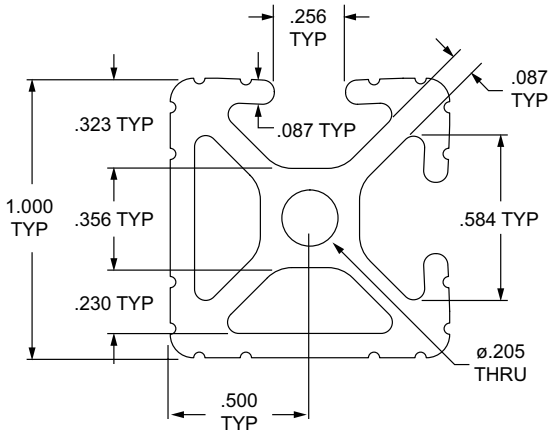

Part No.	Series	Stock Length	Material	Alloy (or comparable)	Finish	Drop Lock	Moment of Inertia	Surface Area	Yield Strength	Modulus of Elasticity	Weight
1002	10	120", 242"	Aluminum	6005A – T61	Clear Anodize	2°	IX = 0.0492"⁴	0.483 in.²	35,000 psi	10,200,000 lb / in.²	0.0470 lb / in.
1002-Black-FB		per inch			Black Anodize		IY = 0.0492"⁴				

Standard Machining Services for 1.00" x 1.00"

Service No.	Series	Service Description	Reference Page
7005	10	Cut to Length	10-2
7051		Access Hole	10-5
7042		Anchor Counterbore	10-7
7061		Tap Profile End	10-3

Other machining services available in Section 10

80/20 BUILD YOUR IDEA
More on 80/20® products available at 8020.net

1.00" X 1.00" Smooth Surface T-slotted Profile - Three Adjacent Open T-slots

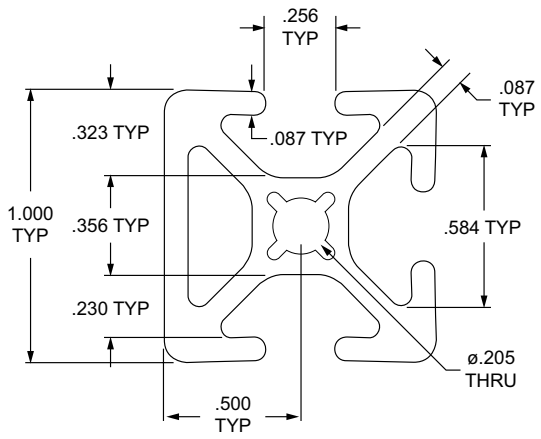

Part No.	Series	Stock Length	Material	Alloy (or comparable)	Finish	Drop Lock	Moment of Inertia	Surface Area	Yield Strength	Modulus of Elasticity	Weight
1003-S	10	120", 242"	Aluminum	6005A – T61	Clear Anodize	2°	IX = 0.0510"⁴	0.461 in.²	35,000 psi	10,200,000 lb / in.²	0.0447 lb / in.
1003-S-Black-FB		per inch			Black Anodize		IY = 0.0463"⁴				

1.00" X 1.00" T-slotted Profile - Three Adjacent Open T-slots

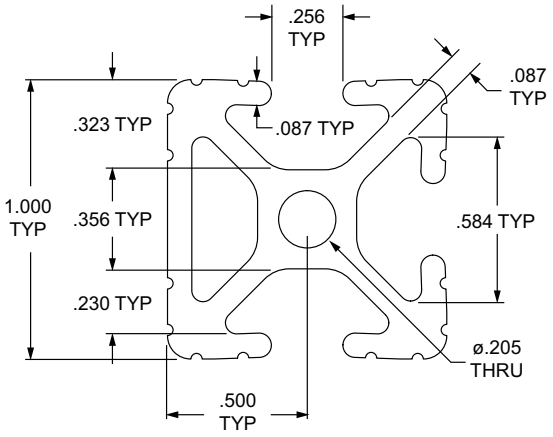

Part No.	Series	Stock Length	Material	Alloy (or comparable)	Finish	Drop Lock	Moment of Inertia	Surface Area	Yield Strength	Modulus of Elasticity	Weight
1003	10	120", 242"	Aluminum	6005A – T61	Clear Anodize	2°	IX = 0.0441"⁴	0.459 in.²	35,000 psi	10,200,000 lb / in.²	0.0448 lb / in.
1003-Black-FB		per inch			Black Anodize		IY = 0.0491"⁴				

Standard Machining Services for 1.00" x 1.00"

Service No.	Series	Service Description	Reference Page
7005	10	Cut to Length	10-2
7051		Access Hole	10-5
7042		Anchor Counterbore	10-7
7061		Tap Profile End	10-3

Other machining services available in Section 10

T-slot Profiles

1.00" X 1.00" Smooth Surface T-slotted Profile - Two Opposite Open T-slots

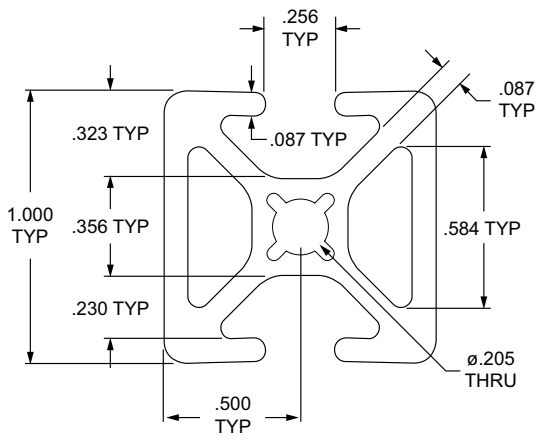

Part No.	Series	Stock Length	Material	Alloy (or comparable)	Finish	Drop Lock	Moment of Inertia	Surface Area	Yield Strength	Modulus of Elasticity	Weight
1004-S 1004-S-Black-FB	10	120", 242" per inch	Aluminum	6005A – T61	Clear Anodize Black Anodize	2°	IX = 0.0563"⁴ IY = 0.0467"⁴	0.484 in.²	35,000 psi	10,200,000 lb / in.²	0.0470 lb / in.

1.00" X 1.00" T-slotted Profile - Two Opposite Open T-slots

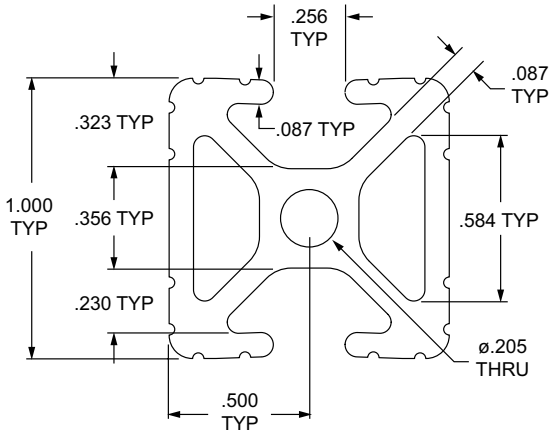

Part No.	Series	Stock Length	Material	Alloy (or comparable)	Finish	Drop Lock	Moment of Inertia	Surface Area	Yield Strength	Modulus of Elasticity	Weight
1004 1004-Black-FB	10	120", 242" per inch	Aluminum	6005A – T61	Clear Anodize Black Anodize	2°	IX = 0.0443"⁴ IY = 0.0541"⁴	0.482 in.²	35,000 psi	10,200,000 lb / in.²	0.0470 lb / in.

Standard Machining Services for 1.00" x 1.00"

Service No.	Series	Service Description	Reference Page
7005	10	Cut to Length	10-2
7051		Access Hole	10-5
7042		Anchor Counterbore	10-7
7061		Tap Profile End	10-3

Other machining services available in Section 10

80/20 BUILD YOUR IDEA
More on 80/20® products available at 8020.net

1.00" X 1.00" Smooth Surface Quarter Round T-slotted Profile - Two Open T-slots

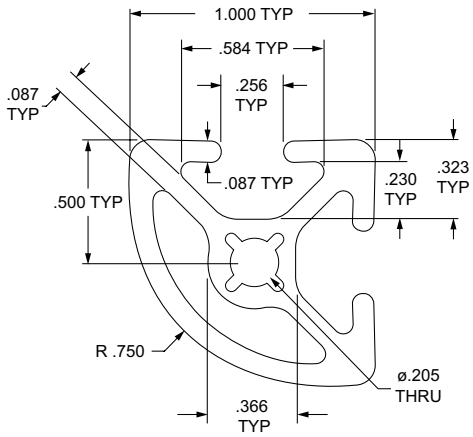

Part No.	Series	Stock Length	Material	Alloy (or comparable)	Finish	Drop Lock	Moment of Inertia	Surface Area	Yield Strength	Modulus of Elasticity	Weight
1012-S 1012-S-Black-FB	10	120", 242" per inch	Aluminum	6005A – T61	Clear Anodize Black Anodize	2°	IX = 0.0414"⁴ IY = 0.0414"⁴	0.423 in.²	35,000 psi	10,200,000 lb / in.²	0.0411 lb / in.

1.00" X 1.00" Quarter Round T-slotted Profile - Two Open T-slots

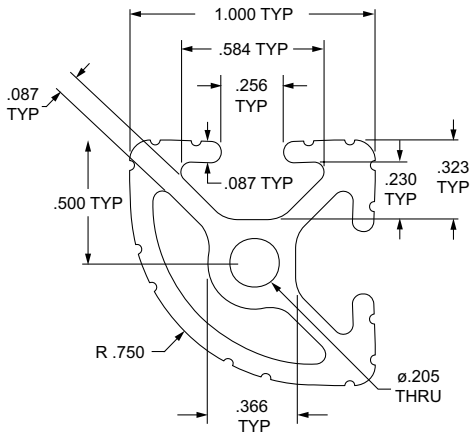

Part No.	Series	Stock Length	Material	Alloy (or comparable)	Finish	Drop Lock	Moment of Inertia	Surface Area	Yield Strength	Modulus of Elasticity	Weight
1012 1012-Black-FB	10	120", 242" per inch	Aluminum	6005A – T61	Clear Anodize Black Anodize	2°	IX = 0.0400"⁴ IY = 0.0400"⁴	0.423 in.²	35,000 psi	10,200,000 lb / in.²	0.0413 lb / in.

Standard Machining Services for 1.00" x 1.00"

Service No.	Series	Service Description	Reference Page
7005	10	Cut to Length	10-2
7051		Access Hole	10-5
7042		Anchor Counterbore	10-7
7061		Tap Profile End	10-3

Other machining services available in Section 10

T-slot Profiles

1.00" X 0.50" T-slotted Profile - Single Open T-slot

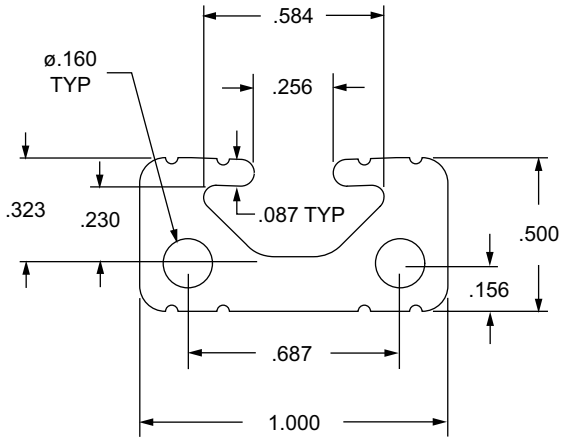

Part No.	Series	Stock Length	Material	Alloy (or comparable)	Finish	Drop Lock	Moment of Inertia	Surface Area	Yield Strength	Modulus of Elasticity	Weight
1050	10	120"	Aluminum	6005A – T61	Clear Anodize	2°	IX = 0.0074"⁴	0.320 in.²	35,000 psi	10,200,000 lb / in.²	0.0312 lb / in.
1050-Black-FB		per inch			Black Anodize		IY = 0.0323"⁴				

Standard Machining Services for 1.00" x 0.50"

Service No.	Series	Service Description	Reference Page
7005		Cut to Length	10-2
7051		Access Hole	10-5
7042	10	Anchor Counterbore	10-7
7006		Tap Profile End	10-3
7256		Drill Thru & Counterbore	10-8

Other machining services available in Section 10

80/20 BUILD YOUR IDEA
More on 80/20® products available at 8020.net

2.00" X .50" T-slotted Profile - Two Adjacent Open T-slots

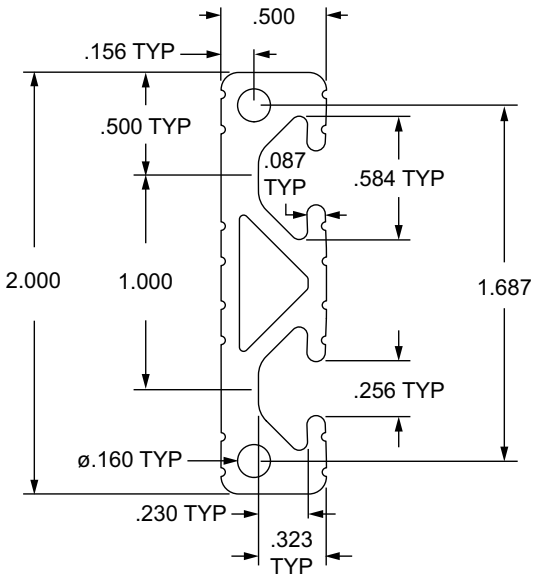

Part No.	Series	Stock Length	Material	Alloy (or comparable)	Finish	Drop Lock	Moment of Inertia	Surface Area	Yield Strength	Modulus of Elasticity	Weight
2012	10	120"	Aluminum	6005A – T61	Clear Anodize	2°	IX = 0.2253"⁴	0.564 in.²	35,000 psi	10,200,000	0.0550 lb / in.
2012-Black-FB		per inch			Black Anodize		IY = 0.0146"⁴			lb / in.²	

Standard Machining Services for 1.00" x 0.50"

Service No.	Series	Service Description	Reference Page
7005	10	Cut to Length	10-2
7051		Access Hole	10-5
7042		Anchor Counterbore	10-7
7008		Tap Profile End	10-3
7256		Drill Thru & Counterbore	10-8

Other machining services available in Section 10

T-slot Profiles

1.00" X 2.00" Smooth Surface T-slotted Profile - Six Open T-slots

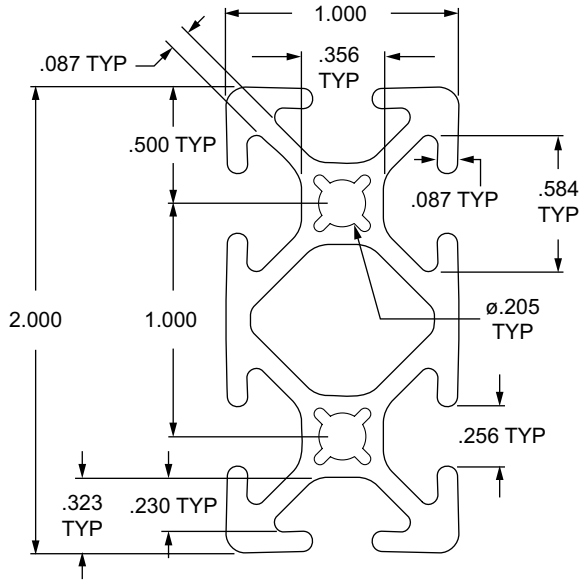

Part No.	Series	Stock Length	Material	Alloy (or comparable)	Finish	Drop Lock	Moment of Inertia	Surface Area	Yield Strength	Modulus of Elasticity	Weight
1020-S	10	120", 242"	Aluminum	6005A – T61	Clear Anodize	2°	IX = 0.3084"⁴ IY = 0.0863"⁴	0.786 in.²	35,000 psi	10,200,000 lb / in.²	0.0763 lb / in.
1020-S-Black-FB		per inch			Black Anodize						

Standard Machining Services for 1.00" x 2.00"

Service No.	Series	Service Description	Reference Page
7000	10	Cut to Length	10-2
7051		Access Hole	10-5
7042		Anchor Counterbore	10-7
7046		Tap Profile End	10-3

Other machining services available in Section 10

80/20 BUILD YOUR IDEA
More on 80/20® products available at 8020.net

1.00" X 2.00" T-slotted Profile - Six Open T-slots

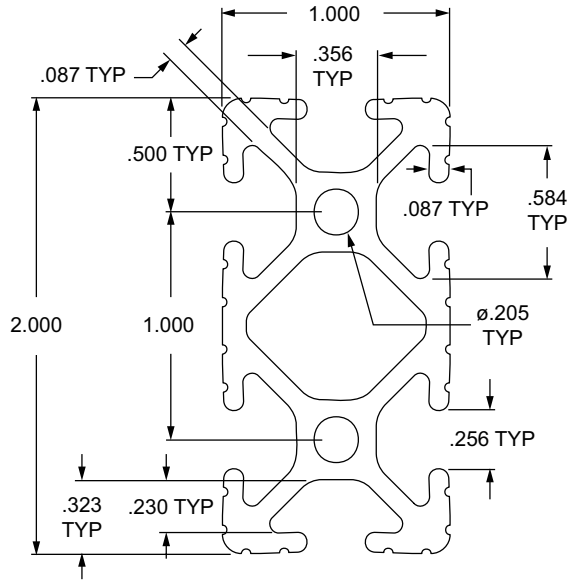

Part No.	Series	Stock Length	Material	Alloy (or comparable)	Finish	Drop Lock	Moment of Inertia	Surface Area	Yield Strength	Modulus of Elasticity	Weight
1020	10	120", 242"	Aluminum	6005A – T61	Clear Anodize	2°	IX = 0.3078"⁴ IY = 0.0833"⁴	0.787 in.²	35,000 psi	10,200,000 lb / in.²	0.0768 lb / in.
1020-Black		120", 242"			Black Anodize						
1020-Black-FB		per inch			Black Anodize						

Standard Machining Services for 1.00" x 2.00"

Service No.	Series	Service Description	Reference Page
7000	10	Cut to Length	10-2
7051		Access Hole	10-5
7042		Anchor Counterbore	10-7
7046		Tap Profile End	10-3

Other machining services available in Section 10

T-slot Profiles

1.00" X 3.00" Smooth Surface T-slotted Profile - Eight Open T-slots

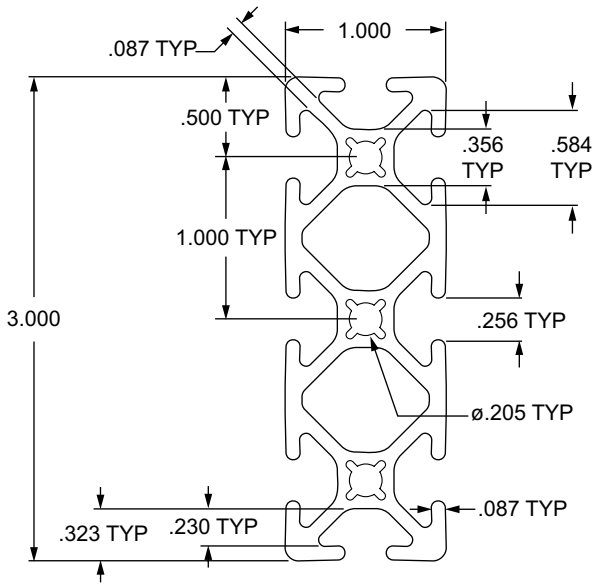

Part No.	Series	Stock Length	Material	Alloy (or comparable)	Finish	Drop Lock	Moment of Inertia	Surface Area	Yield Strength	Modulus of Elasticity	Weight
1030-S	10	120", 242"	Aluminum	6005A – T61	Clear Anodize	2°	IX = 0.1262"^{4} IY = 0.9599"^{4}	1.135 in.^{2}	35,000 psi	10,200,000 lb / in.^{2}	0.1101 lb / in.
1030-S-Black-FB		per inch			Black Anodize						

Standard Machining Services

Service No.	Series	Service Description	Reference Page
7003	10	Cut to Length	10-2
7051		Access Hole	10-5
7042		Anchor Counterbore	10-7
7036		Tap Profile End	10-3

Other machining services available in Section 10

80/20 BUILD YOUR IDEA
More on 80/20® products available at 8020.net

1.00" X 3.00" T-slotted Profile - Eight Open T-slots

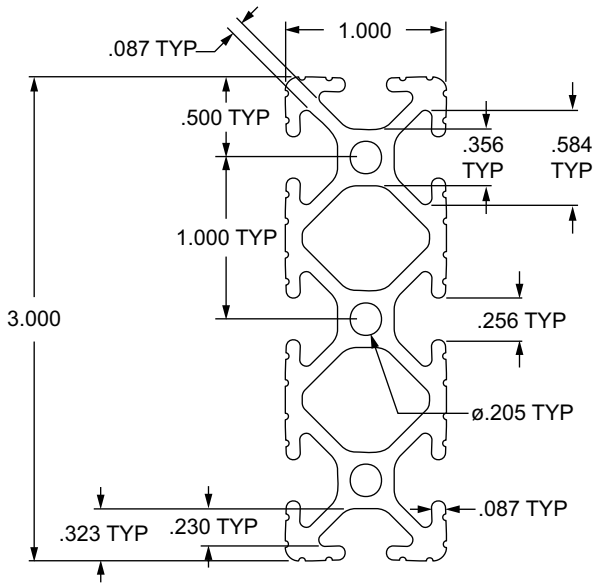

Part No.	Series	Stock Length	Material	Alloy (or comparable)	Finish	Drop Lock	Moment of Inertia	Surface Area	Yield Strength	Modulus of Elasticity	Weight
1030	10	120", 242"	Aluminum	6005A – T61	Clear Anodize	2°	IX = 0.9711"^{4}	1.140 in.^{2}	35,000 psi	10,200,000 lb / in.^{2}	0.1112 lb / in.
1030-Black-FB		per inch			Black Anodize		IY = 0.1238"^{4}				

Standard Machining Services

Service No.	Series	Service Description	Reference Page
7003	10	Cut to Length	10-2
7051		Access Hole	10-5
7042		Anchor Counterbore	10-7
7036		Tap Profile End	10-3

Other machining services available in Section 10

T-slot Profiles

2.00" X 2.00" Smooth Surface T-slotted Profile - Eight Open T-slots

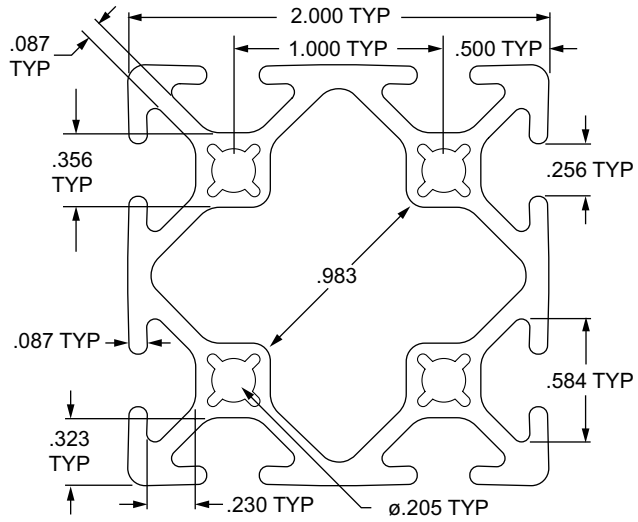

Part No.	Series	Stock Length	Material	Alloy (or comparable)	Finish	Drop Lock	Moment of Inertia	Surface Area	Yield Strength	Modulus of Elasticity	Weight
2020-S	10	120", 242"	Aluminum	6005A – T61	Clear Anodize	2°	IX = 0.5545"⁴ IY = 0.5545"⁴	1.216 in.²	35,000 psi	10,200,000 lb / in.²	0.1179 lb / in.
2020-S-Black-FB		per inch			Black Anodize						

Standard Machining Services

Service No.	Series	Service Description	Reference Page
7012	10	Cut to Length	10-2
7051		Access Hole	10-5
7042		Anchor Counterbore	10-7
7064		Tap Profile End	10-3

Other machining services available in Section 10

80/20 BUILD YOUR IDEA
More on 80/20® products available at 8020.net

2.00" X 2.00" T-slotted Profile - Eight Open T-slots

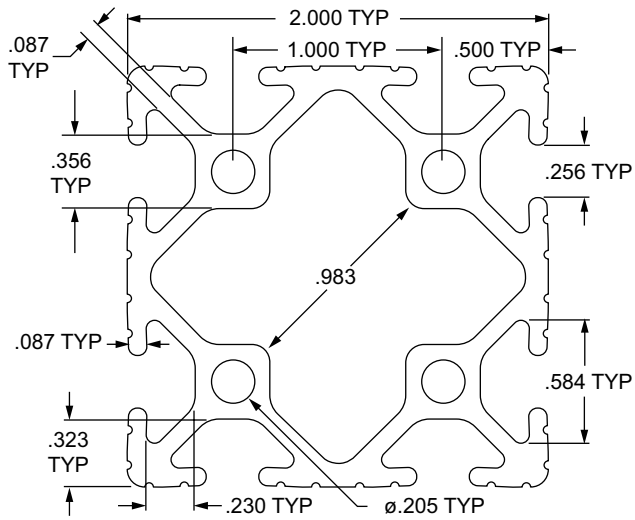

Part No.	Series	Stock Length	Material	Alloy (or comparable)	Finish	Drop Lock	Moment of Inertia	Surface Area	Yield Strength	Modulus of Elasticity	Weight
2020	10	120", 242"	Aluminum	6005A – T61	Clear Anodize	2°	IX = 0.5509in4 IY = 0.5509in4	1.228 in.2	35,000 psi	10,200,000 lb / in.2	0.1198 lb / in.
2020-Black		120", 242"			Black Anodize						
2020-Black-FB		per inch			Black Anodize						

Standard Machining Services

Service No.	Series	Service Description	Reference Page
7012	10	Cut to Length	10-2
7051		Access Hole	10-5
7042		Anchor Counterbore	10-7
7064		Tap Profile End	10-3

Other machining services available in Section 10

T-slot Profiles

2.00" X 4.00" Smooth Surface T-slotted Profile - Twelve Open T-slots

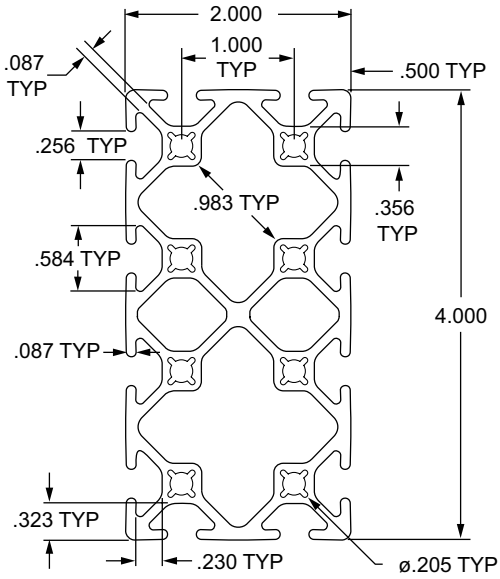

Part No.	Series	Stock Length	Material	Alloy (or comparable)	Finish	Drop Lock	Moment of Inertia	Surface Area	Yield Strength	Modulus of Elasticity	Weight
2040-S	10	120", 242"	Aluminum	6005A – T61	Clear Anodize	2°	IX = 1.0543"⁴	2.255 in.²	35,000 psi	10,200,000 lb / in.²	0.2188 lb / in.
2040-S-Black-FB		per inch			Black Anodize		IY = 3.5123"⁴				

Standard Machining Services

Service No.	Series	Service Description	Reference Page
7013	10	Cut to Length	10-2
7051		Access Hole	10-5
7042		Anchor Counterbore	10-7
7038		Tap Profile End	10-3

Other machining services available in Section 10

80/20 BUILD YOUR IDEA
More on 80/20® products available at 8020.net

2.00" X 4.00" T-slotted Profile - Twelve Open T-slots

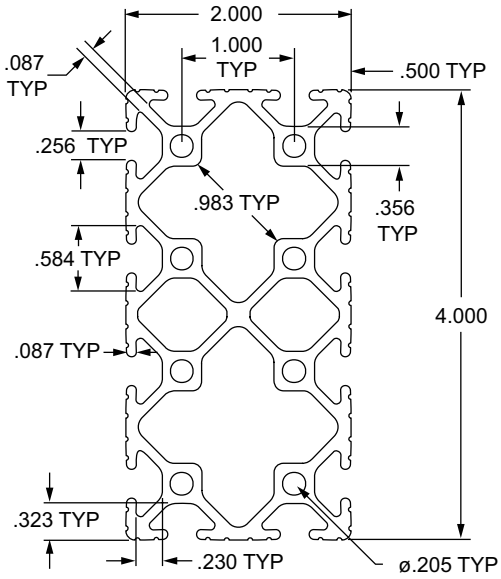

Part No.	Series	Stock Length	Material	Alloy (or comparable)	Finish	Drop Lock	Moment of Inertia	Surface Area	Yield Strength	Modulus of Elasticity	Weight
2040	10	120", 242"	Aluminum	6005A – T61	Clear Anodize	2°	IX = 3.5168"⁴	2.290 in.²	35,000 psi	10,200,000	0.2233 lb / in.
2040-Black-FB		per inch			Black Anodize		IY = 1.0513"⁴			lb / in.²	

Standard Machining Services

Service No.	Series	Service Description	Reference Page
7013	10	Cut to Length	10-2
7051		Access Hole	10-5
7042		Anchor Counterbore	10-7
7038		Tap Profile End	10-3

Other machining services available in Section 10

T-slot Profiles

1.50" X 1.50" Ultra-Lite Smooth Surface T-slotted Profile - Four Open T-slots

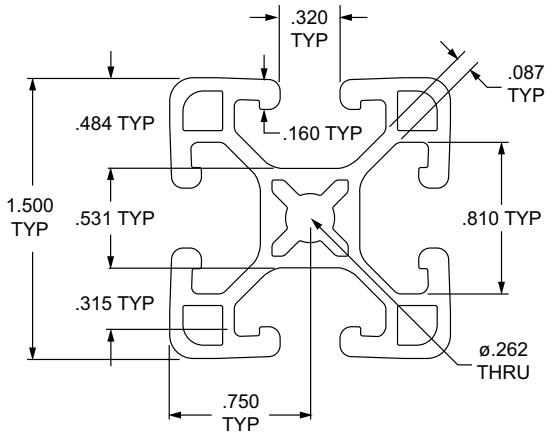

Part No.	Series	Stock Length	Material	Alloy (or comparable)	Finish	Drop Lock	Moment of Inertia	Surface Area	Yield Strength	Modulus of Elasticity	Weight
1515-ULS	15	120", 242"	Aluminum	6005A – T61	Clear Anodize	2°	IX = 0.1765"⁴ IY = 0.1765"⁴	2.290 in.²	35,000 psi	10,200,000 lb / in.²	0.0790 lb / in.
1515-ULS-Black		120", 242"			Black Anodize						
1515-ULS-Black-FB		per inch			Black Anodize						

1.50" X 1.50" Ultra-Lite T-slotted Profile - Four Open T-slots

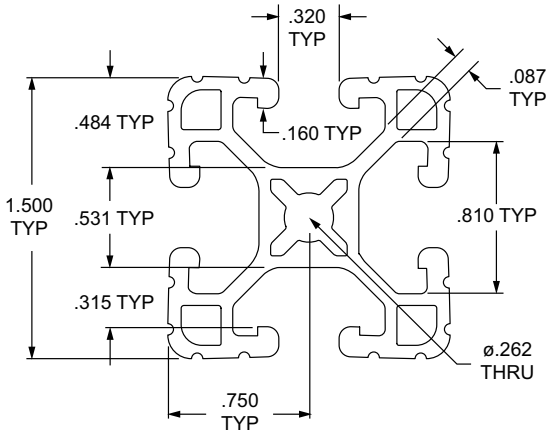

Part No.	Series	Stock Length	Material	Alloy (or comparable)	Finish	Drop Lock	Moment of Inertia	Surface Area	Yield Strength	Modulus of Elasticity	Weight
1515-UL	15	120", 242"	Aluminum	6005A – T61	Clear Anodize	2°	IX = 0.1772"⁴ IY = 0.1772"⁴	0.787 in.²	35,000 psi	10,200,000 lb / in.²	0.0768 lb / in.
1515-UL-Black		120", 242"			Black Anodize						
1515-UL-Black-FB		per inch			Black Anodize						

Standard Machining Services for 1.50" x 1.50"

Service No.	Series	Service Description	Reference Page
7010	15	Cut to Length	10-2
7050		Access Hole	10-5
7040		Anchor Counterbore	10-7
7060		Tap Profile End	10-3

Other machining services available in Section 10

80/20 BUILD YOUR IDEA
More on 80/20® products available at 8020.net

1.50" X 1.50" Lite Smooth Surface T-slotted Profile - Four Open T-slots

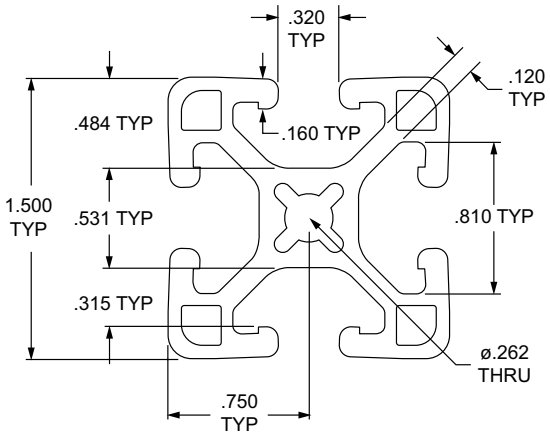

Part No.	Series	Stock Length	Material	Alloy (or comparable)	Finish	Drop Lock	Moment of Inertia	Surface Area	Yield Strength	Modulus of Elasticity	Weight
1515-LS	15	120", 242"	Aluminum	6005A – T61	Clear Anodize	2°	IX = 0.1921"⁴ IY = 0.1921"⁴	0.882 in.²	35,000 psi	10,200,000 lb / in.²	0.0860 lb / in.
1515-LS-Black		120", 242"			Black Anodize						
1515-LS-Black-FB		per inch			Black Anodize						

1.50" X 1.50" Lite T-slotted Profile - Four Open T-slots

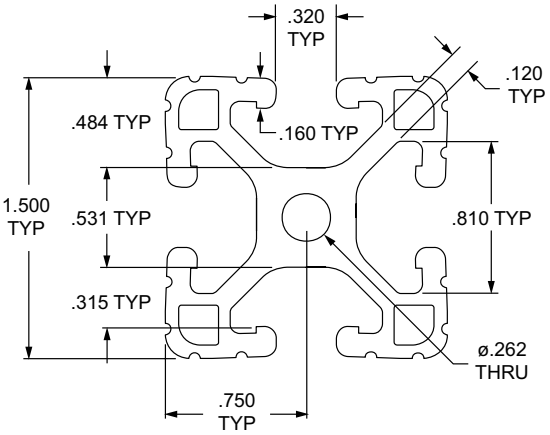

Part No.	Series	Stock Length	Material	Alloy (or comparable)	Finish	Drop Lock	Moment of Inertia	Surface Area	Yield Strength	Modulus of Elasticity	Weight
1515-Lite	15	120", 242"	Aluminum	6005A – T61	Clear Anodize	2°	IX = 0.1853"⁴ IY = 0.1853"⁴	0.896 in.²	35,000 psi	10,200,000 lb / in.²	0.0873 lb / in.
1515-Lite-Black		120", 242"			Black Anodize						
1515-Lite-Black-FB		per inch			Black Anodize						
1515-Lite-Yellow		120", 242"			Yellow Powder Coat						

Standard Machining Services for 1.50" x 1.50"

Service No.	Series	Service Description	Reference Page
7010	15	Cut to Length	10-2
7050		Access Hole	10-5
7040		Anchor Counterbore	10-7
7060		Tap Profile End	10-3

Other machining services available in Section 10

T-slot Profiles

1.50" X 1.50" Smooth Surface T-slotted Profile - Four Open T-slots

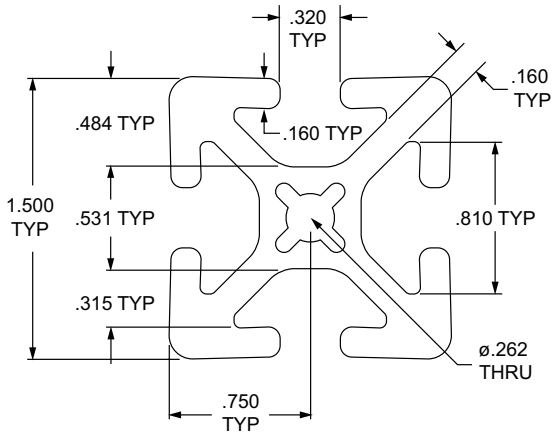

Part No.	Series	Stock Length	Material	Alloy (or comparable)	Finish	Drop Lock	Moment of Inertia	Surface Area	Yield Strength	Modulus of Elasticity	Weight
1515-S	15	120", 242"	Aluminum	6005A – T61	Clear Anodize	2°	IX = 0.2631"⁴ IY = 0.2631"⁴	1.138 in.²	35,000 psi	10,200,000 lb / in.²	0.1109 lb / in.
1515-S-Black		120", 242"			Black Anodize						
1515-S-Black-FB		per inch			Black Anodize						

1.50" X 1.50" T-slotted Profile - Four Open T-slots

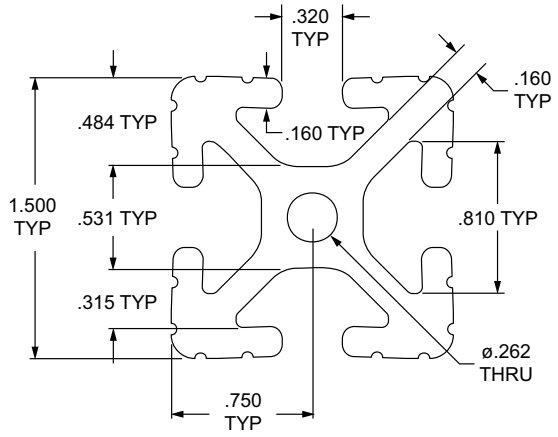

Part No.	Series	Stock Length	Material	Alloy (or comparable)	Finish	Drop Lock	Moment of Inertia	Surface Area	Yield Strength	Modulus of Elasticity	Weight
1515	15	120", 242"	Aluminum	6005A – T61	Clear Anodize	2°	IX = 0.2542"⁴ IY = 0.2542"⁴	1.152 in.²	35,000 psi	10,200,000 lb / in.²	0.1123 lb / in.
1515-Black		120", 242"			Black Anodize						
1515-Black-FB		per inch			Black Anodize						

Standard Machining Services for 1.50" x 1.50"

Service No.	Series	Service Description	Reference Page
7010	15	Cut to Length	10-2
7050		Access Hole	10-5
7040		Anchor Counterbore	10-7
7060		Tap Profile End	10-3

Other machining services available in Section 10

80/20 BUILD YOUR IDEA
More on 80/20® products available at 8020.net

1.50" X 1.50" Lite Smooth Surface T-slotted Profile - Single Open T-slot

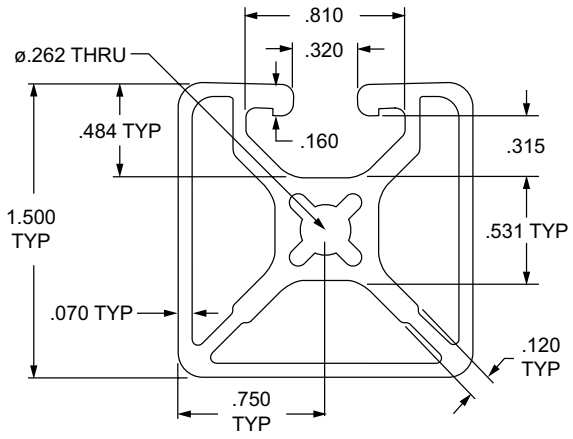

Part No.	Series	Stock Length	Material	Alloy (or comparable)	Finish	Drop Lock	Moment of Inertia	Surface Area	Yield Strength	Modulus of Elasticity	Weight
1501-LS	15	120", 242"	Aluminum	6005A – T61	Clear Anodize	2°	IX = 0.1820"⁴ IY = 0.1799"⁴	0.815 in.²	35,000 psi	10,200,000 lb / in.²	0.0788 lb / in.
1501-LS-Black-FB		per inch			Black Anodize						

1.50" X 1.50" T-slotted Profile - Single Open T-slot

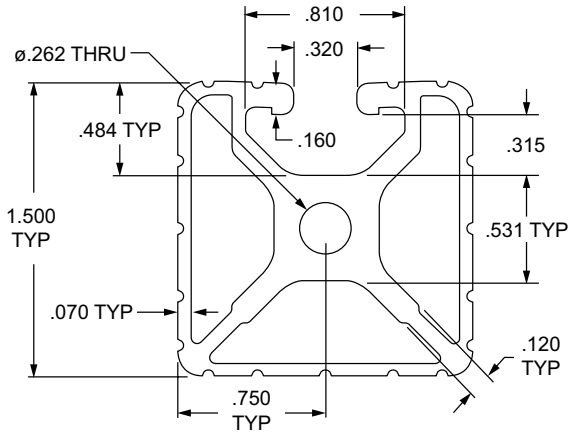

Part No.	Series	Stock Length	Material	Alloy (or comparable)	Finish	Drop Lock	Moment of Inertia	Surface Area	Yield Strength	Modulus of Elasticity	Weight
1501	15	120", 242"	Aluminum	6005A – T61	Clear Anodize	2°	IX = 0.1726"⁴ IY = 0.1694"⁴	0.826 in.²	35,000 psi	10,200,000 lb / in.²	0.0805 lb / in.
1501-Black-FB		per inch			Black Anodize						

Standard Machining Services for 1.50" x 1.50"

Service No.	Series	Service Description	Reference Page
7010	15	Cut to Length	10-2
7050		Access Hole	10-5
7040		Anchor Counterbore	10-7
7060		Tap Profile End	10-3

Other machining services available in Section 10

T-slot Profiles

1.50" X 1.50" Lite Smooth Surface T-slotted Profile - Two Adjacent Open T-slots

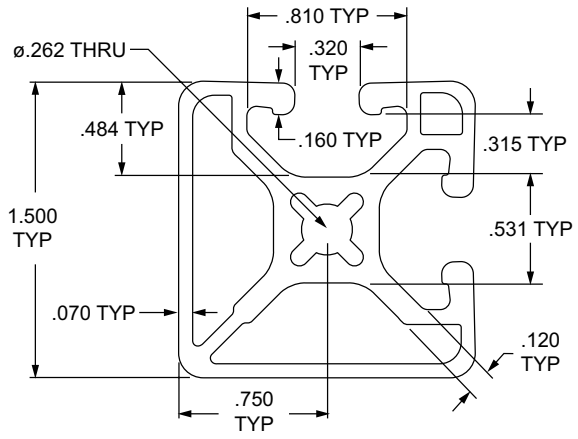

Part No.	Series	Stock Length	Material	Alloy (or comparable)	Finish	Drop Lock	Moment of Inertia	Surface Area	Yield Strength	Modulus of Elasticity	Weight
1502-LS	15	120", 242"	Aluminum	6005A – T61	Clear Anodize	2°	IX = 0.1834"⁴ IY = 0.1834"⁴	0.832 in.²	35,000 psi	10,200,000 lb / in.²	0.0811 lb / in.
1502-LS-Black-FB		per inch			Black Anodize						

1.50" X 1.50" T-slotted Profile - Two Adjacent Open T-slots

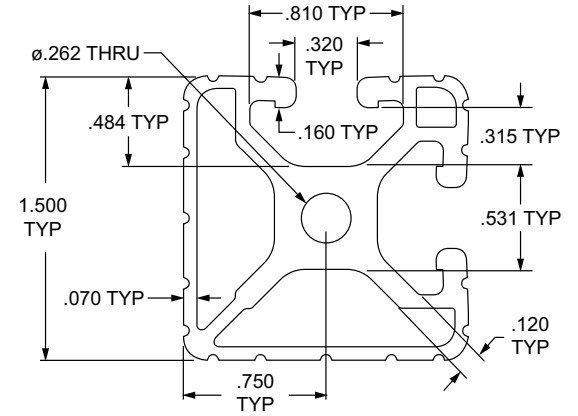

Part No.	Series	Stock Length	Material	Alloy (or comparable)	Finish	Drop Lock	Moment of Inertia	Surface Area	Yield Strength	Modulus of Elasticity	Weight
1502	15	120", 242"	Aluminum	6005A – T61	Clear Anodize	2°	IX = 0.1660"⁴ IY = 0.1730"⁴	0.844 in.²	35,000 psi	10,200,000 lb / in.²	0.0823 lb / in.
1502-Black-FB		per inch			Black Anodize						

Standard Machining Services for 1.50" x 1.50"

Service No.	Series	Service Description	Reference Page
7010	15	Cut to Length	10-2
7050		Access Hole	10-5
7040		Anchor Counterbore	10-7
7060		Tap Profile End	10-3

Other machining services available in Section 10

80/20 BUILD YOUR IDEA
More on 80/20® products available at 8020.net

1.50" X 1.50" Lite Smooth Surface T-slotted Profile - Three Adjacent Open T-slots

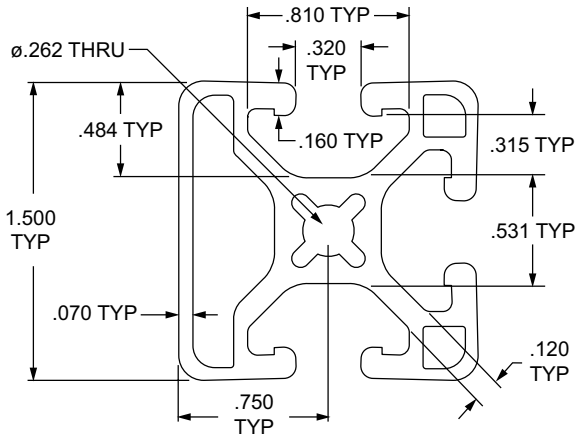

Part No.	Series	Stock Length	Material	Alloy (or comparable)	Finish	Drop Lock	Moment of Inertia	Surface Area	Yield Strength	Modulus of Elasticity	Weight
1503-LS	15	120", 242"	Aluminum	6005A – T61	Clear Anodize	2°	IX = 0.1859"⁴ IY = 0.1840"⁴	0.848 in.²	35,000 psi	10,200,000 lb / in.²	0.0827 lb / in.
1503-LS-Black-FB		per inch			Black Anodize						

1.50" X 1.50" T-slotted Profile - Three Adjacent Open T-slots

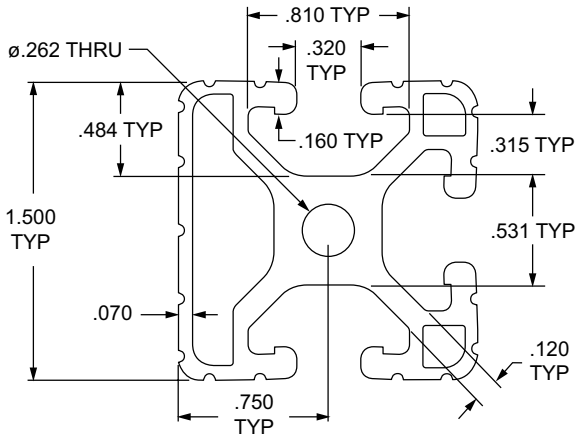

Part No.	Series	Stock Length	Material	Alloy (or comparable)	Finish	Drop Lock	Moment of Inertia	Surface Area	Yield Strength	Modulus of Elasticity	Weight
1503	15	120", 242"	Aluminum	6005A – T61	Clear Anodize	2°	IX = 0.1760"⁴ IY = 0.1790"⁴	0.862 in.²	35,000 psi	10,200,000 lb / in.²	0.0840 lb / in.
1503-Black-FB		per inch			Black Anodize						

Standard Machining Services for 1.50" x 1.50"

Service No.	Series	Service Description	Reference Page
7010	15	Cut to Length	10-2
7050		Access Hole	10-5
7040		Anchor Counterbore	10-7
7060		Tap Profile End	10-3

Other machining services available in Section 10

T-slot Profiles

1.50" X 1.50" Lite Smooth Surface T-slotted Profile - Two Opposite Open T-slots

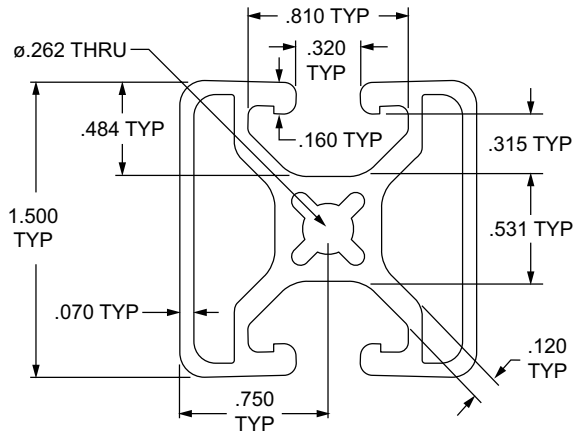

Part No.	Series	Stock Length	Material	Alloy (or comparable)	Finish	Drop Lock	Moment of Inertia	Surface Area	Yield Strength	Modulus of Elasticity	Weight
1504-LS	15	120", 242"	Aluminum	6005A – T61	Clear Anodize	2°	IX = 0.1796"⁴ IY = 0.1759"⁴	0.815 in.²	35,000 psi	10,200,000 lb / in.²	0.0795 lb / in.
1504-LS-Black-FB		per inch			Black Anodize						

1.50" X 1.50" T-slotted Profile - Two Opposite Open T-slots

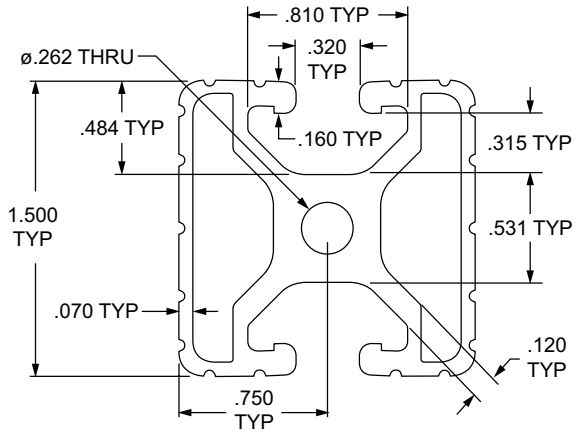

Part No.	Series	Stock Length	Material	Alloy (or comparable)	Finish	Drop Lock	Moment of Inertia	Surface Area	Yield Strength	Modulus of Elasticity	Weight
1504	15	120", 242"	Aluminum	6005A – T61	Clear Anodize	2°	IX = 0.1729"⁴ IY = 0.1665"⁴	0.827 in.²	35,000 psi	10,200,000 lb / in.²	0.0807 lb / in.
1504-Black-FB		per inch			Black Anodize						

Standard Machining Services for 1.50" x 1.50"

Service No.	Series	Service Description	Reference Page
7010	15	Cut to Length	10-2
7050		Access Hole	10-5
7040		Anchor Counterbore	10-7
7060		Tap Profile End	10-3

Other machining services available in Section 10

80/20 BUILD YOUR IDEA
More on 80/20® products available at 8020.net

1.50" X 1.50" 45 Degree Closed Side T-slotted Profile - Two Adjacent Open T-slots

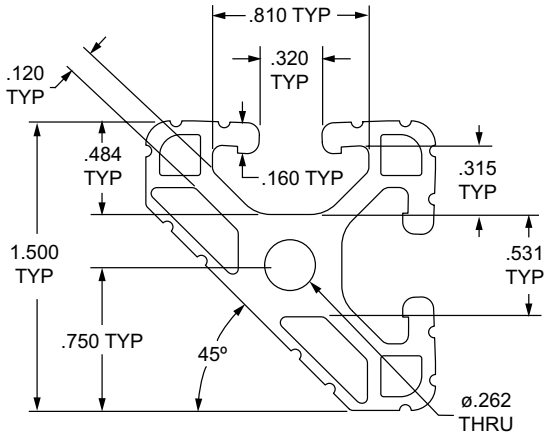

Part No.	Series	Stock Length	Material	Alloy (or comparable)	Finish	Drop Lock	Moment of Inertia	Surface Area	Yield Strength	Modulus of Elasticity	Weight
1547	15	120", 242"	Aluminum	6005A – T61	Clear Anodize	2°	IX = 0.1365"⁴ IY = 0.1365"⁴	0.740 in.²	35,000 psi	10,200,000 lb / in.²	0.0723 lb / in.
1547-Black-FB		per inch			Black Anodize						

1.50" X 1.50" Lite Smooth Surface Quarter Round T-slotted Profile - Two Open T-slots

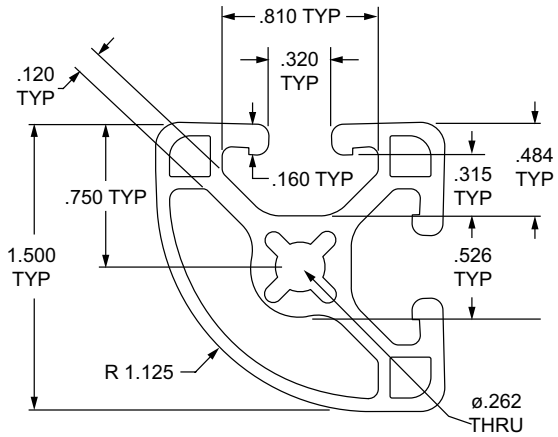

Part No.	Series	Stock Length	Material	Alloy (or comparable)	Finish	Drop Lock	Moment of Inertia	Surface Area	Yield Strength	Modulus of Elasticity	Weight
1517-LS	15	120", 242"	Aluminum	6005A – T61	Clear Anodize	2°	IX = 0.1686"⁴ IY = 0.1686"⁴	0.748 in.²	35,000 psi	10,200,000 lb / in.²	0.0729 lb / in.
1517-LS-Black-FB		per inch			Black Anodize						

Standard Machining Services for 1.50" x 1.50"

Service No.	Series	Service Description	Reference Page
7010	15	Cut to Length	10-2
7050		Access Hole	10-5
7040		Anchor Counterbore	10-7
7060		Tap Profile End	10-3

Other machining services available in Section 10

T-slot Profiles

1.50" X 1.50" Quarter Round T-slotted Profile - Two Open T-slots

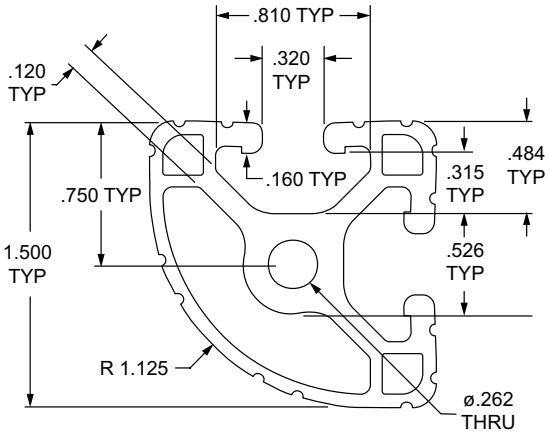

Part No.	Series	Stock Length	Material	Alloy (or comparable)	Finish	Drop Lock	Moment of Inertia	Surface Area	Yield Strength	Modulus of Elasticity	Weight
1517	15	120", 242"	Aluminum	6005A – T61	Clear Anodize	2°	IX = 0.1662"⁴ IY = 0.1662"⁴	0.765 in.²	35,000 psi	10,200,000 lb / in.²	0.0746 lb / in.
1517-Black-FB		per inch			Black Anodize						

Standard Machining Services for 1.50" x 1.50"

Service No.	Series	Service Description	Reference Page
7010	15	Cut to Length	10-2
7050		Access Hole	10-5
7040		Anchor Counterbore	10-7
7060		Tap Profile End	10-3

Other machining services available in Section 10

80/20® BUILD YOUR IDEA
More on 80/20® products available at 8020.net

1.50" X 0.75" Smooth Surface T-slotted Profile - Single Open T-slot

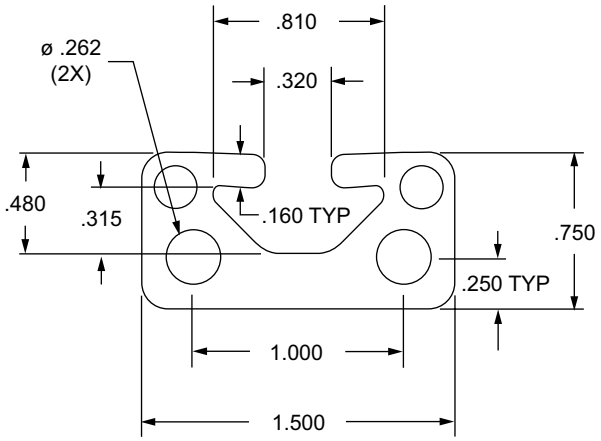

Part No.	Series	Stock Length	Material	Alloy (or comparable)	Finish	Drop Lock	Moment of Inertia	Surface Area	Yield Strength	Modulus of Elasticity	Weight
1575	15	120", 242"	Aluminum	6005A – T61	Clear Anodize	2°	IX = 0.0380"⁴ IY = 0.1470"⁴	0.686 in.²	35,000 psi	10,200,000 lb / in.²	0.0669 lb / in.
1575-Black-FB		per inch			Black Anodize						

1.50" X 0.75" Lite T-slotted Profile - Single Open T-slot

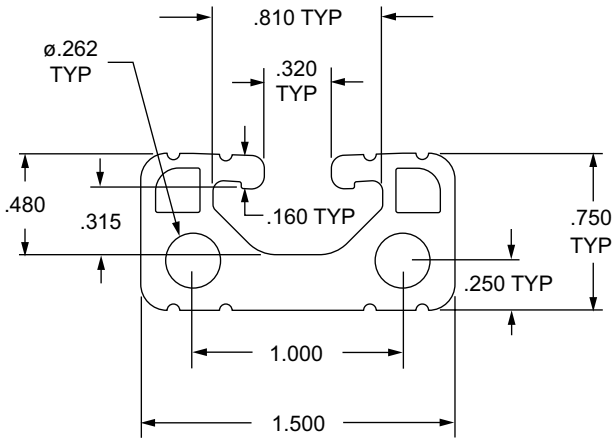

Part No.	Series	Stock Length	Material	Alloy (or comparable)	Finish	Drop Lock	Moment of Inertia	Surface Area	Yield Strength	Modulus of Elasticity	Weight
1534-Lite	15	120"	Aluminum	6005A – T61	Clear Anodize	2°	IX = 0.0356"⁴ IY = 0.1360"⁴	0.634 in.²	35,000 psi	10,200,000 lb / in.²	0.0618 lb / in.
1534-Lite-Black-FB		per inch			Black Anodize						

Standard Machining Services for 1.50" x 0.75"

Service No.	Series	Service Description	Reference Page
7010		Cut to Length	10-2
7050		Access Hole	10-5
7040	15	Anchor Counterbore	10-7
7014		Tap Profile End	10-3
7257		Drill Thru & Counterbore	10-8

Other machining services available in Section 10

T-slot Profiles

3.00" X 0.75" Smooth Surface T-slotted Profile - Two Adjacent Open T-slots

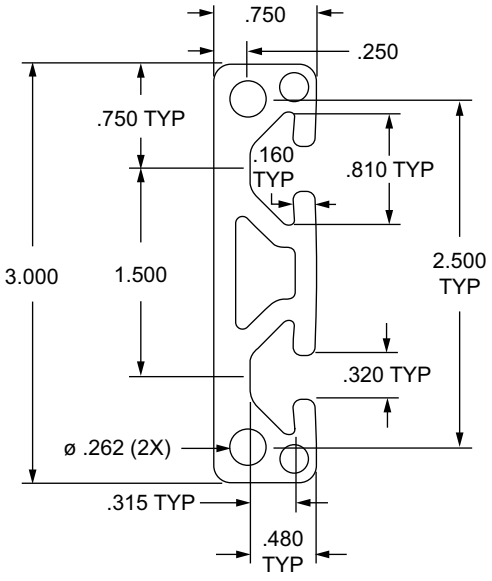

Part No.	Series	Stock Length	Material	Alloy (or comparable)	Finish	Drop Lock	Moment of Inertia	Surface Area	Yield Strength	Modulus of Elasticity	Weight
3075	15	120"	Aluminum	6005A – T61	Clear Anodize	2°	IX = 1.0672"⁴	1.320 in.²	35,000 psi	10,200,000 lb / in.²	0.1287 lb / in.
3075-Black-FB		per inch			Black Anodize		IY = 0.0789"⁴				

Standard Machining Services for 3.00" x 0.75"

Service No.	Series	Service Description	Reference Page
7020		Cut to Length	10-2
7050		Access Hole	10-5
7040	15	Anchor Counterbore	10-7
7016		Tap Profile End	10-3
7257		Drill Thru & Counterbore	10-8

Other machining services available in Section 10

80/20 BUILD YOUR IDEA
More on 80/20® products available at 8020.net

3.00" X 0.75" Lite T-slotted Profile - Two Adjacent Open T-slots

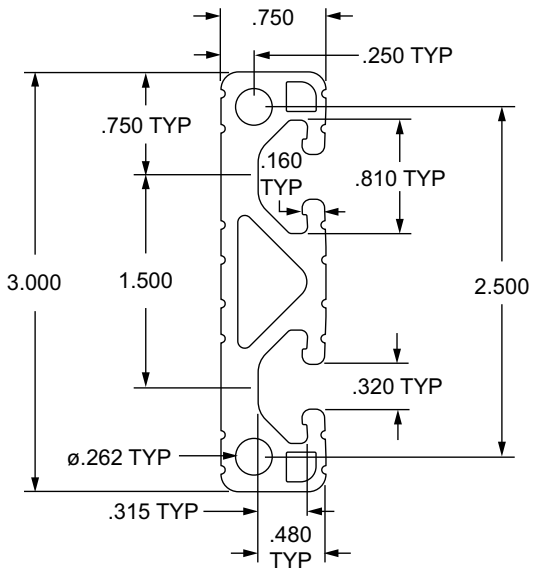

Part No.	Series	Stock Length	Material	Alloy (or comparable)	Finish	Drop Lock	Moment of Inertia	Surface Area	Yield Strength	Modulus of Elasticity	Weight
3034-Lite	15	120"	Aluminum	6005A – T61	Clear Anodize	2°	IX = 0.9829"⁴	1.186 in.²	35,000 psi	10,200,000 lb / in.²	0.1157 lb / in.
3034-Lite-Black-FB		per inch			Black Anodize		IY = 0.0725"⁴				

Standard Machining Services for 3.00" x 0.75"

Service No.	Series	Service Description	Reference Page
7020	15	Cut to Length	10-2
7050		Access Hole	10-5
7040		Anchor Counterbore	10-7
7016		Tap Profile End	10-3
7257		Drill Thru & Counterbore	10-8

Other machining services available in Section 10

T-slot Profiles

1.50" X 3.00" Ultra-Lite Smooth Surface T-slotted Profile - Six Open T-slots

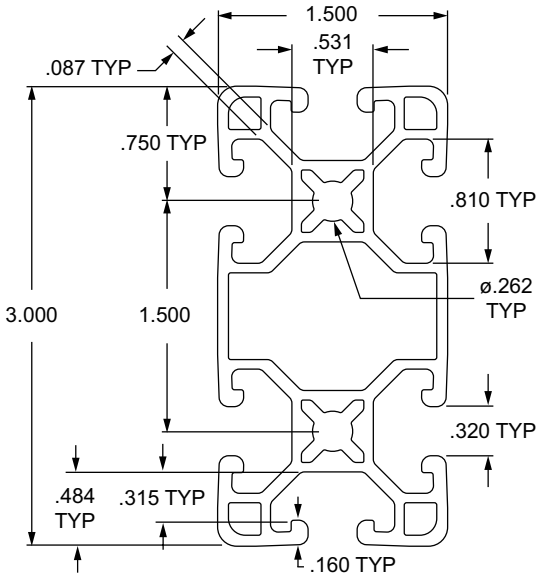

Part No.	Series	Stock Length	Material	Alloy (or comparable)	Finish	Drop Lock	Moment of Inertia	Surface Area	Yield Strength	Modulus of Elasticity	Weight
1530-ULS	15	120", 242"	Aluminum	6005A – T61	Clear Anodize	2°	IX = 1.2855"⁴	1.388 in.²	35,000 psi	10,200,000 lb / in.²	0.1350 lb / in.
1530-ULS-Black-FB		per inch			Black Anodize		IY = 0.3317"⁴				

Standard Machining Services for 1.50" x 3.00"

Service No.	Series	Service Description	Reference Page
7020	15	Cut to Length	10-2
7050		Access Hole	10-5
7040		Anchor Counterbore	10-7
7045		Tap Profile End	10-3

Other machining services available in Section 10

80/20 BUILD YOUR IDEA
More on 80/20® products available at 8020.net

1.50" X 3.00" Ultra-Lite T-slotted Profile - Six Open T-slots

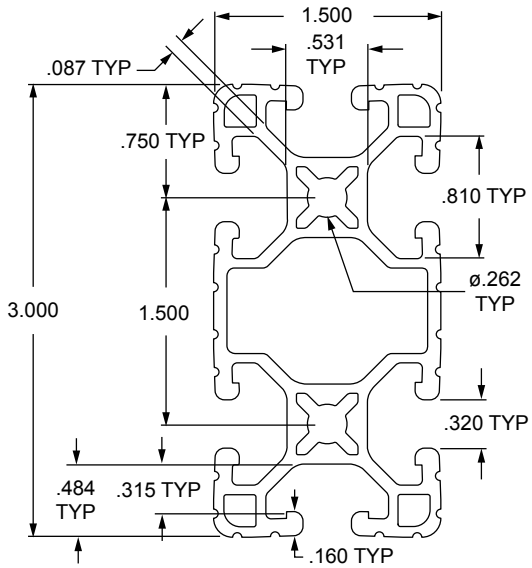

Part No.	Series	Stock Length	Material	Alloy (or comparable)	Finish	Drop Lock	Moment of Inertia	Surface Area	Yield Strength	Modulus of Elasticity	Weight
1530-UL	15	120", 242"	Aluminum	6005A – T61	Clear Anodize	2°	IX = 1.2481"⁴	1.354 in.²	35,000 psi	10,200,000 lb / in.²	0.1320 lb / in.
1530-UL-Black-FB		per inch			Black Anodize		IY = 0.3177"⁴				

Standard Machining Services for 1.50" x 3.00"

Service No.	Series	Service Description	Reference Page
7020	15	Cut to Length	10-2
7050		Access Hole	10-5
7040		Anchor Counterbore	10-7
7045		Tap Profile End	10-3

Other machining services available in Section 10

T-slot Profiles

1.50" X 3.00" Lite Smooth Surface T-slotted Profile - Six Open T-slots

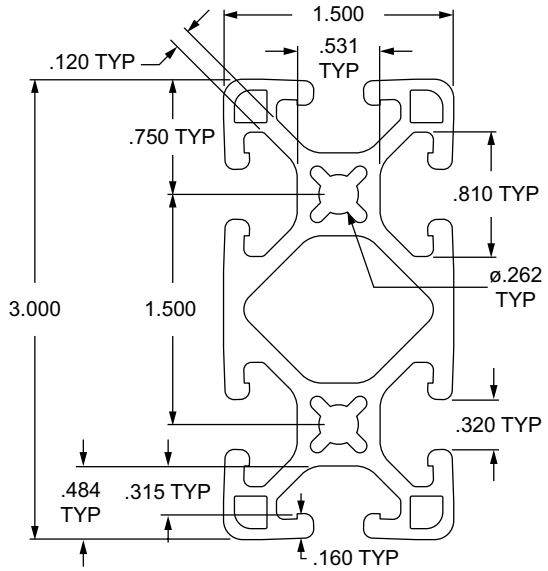

Part No.	Series	Stock Length	Material	Alloy (or comparable)	Finish	Drop Lock	Moment of Inertia	Surface Area	Yield Strength	Modulus of Elasticity	Weight
1530-LS	15	120", 242"	Aluminum	6005A – T61	Clear Anodize	2°	IX = 1.3881in4 IY = 0.4061in4	1.682 in.2	35,000 psi	10,200,000 lb / in.2	0.1640 lb / in.
1530-LS-Black		120", 242"			Black Anodize						
1530-LS-Black-FB		per inch			Black Anodize						

Standard Machining Services for 1.50" x 3.00"

Service No.	Series	Service Description	Reference Page
7020	15	Cut to Length	10-2
7050		Access Hole	10-5
7040		Anchor Counterbore	10-7
7045		Tap Profile End	10-3

Other machining services available in Section 10

80/20 BUILD YOUR IDEA
More on 80/20® products available at 8020.net

1.50" X 3.00" Lite T-slotted Profile - Six Open T-slots

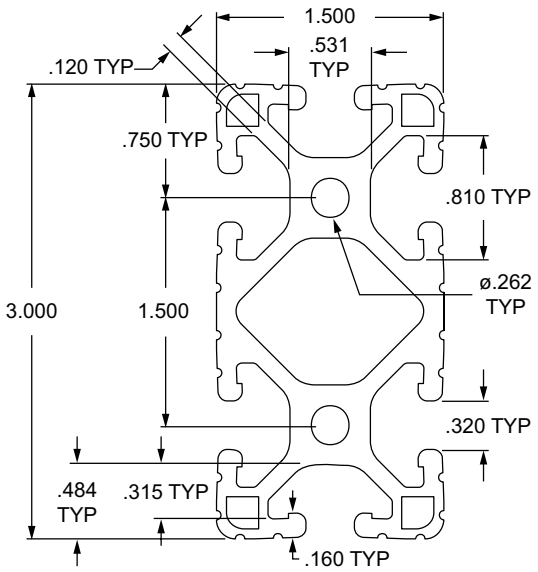

Part No.	Series	Stock Length	Material	Alloy (or comparable)	Finish	Drop Lock	Moment of Inertia	Surface Area	Yield Strength	Modulus of Elasticity	Weight
1530-Lite	15	120", 242"	Aluminum	6005A – T61	Clear Anodize	2°	IX = 1.3847in4 IY = 0.3935in4	1.722 in.2	35,000 psi	10,200,000 lb / in.2	0.1679 lb / in.
1530-Lite-Black		120", 242"			Black Anodize						
1530-Lite-Black-FB		per inch			Black Anodize						
1530-Lite-Yellow		120", 242"			Yellow Powder Coat						

Standard Machining Services for 1.50" x 3.00"

Service No.	Series	Service Description	Reference Page
7020	15	Cut to Length	10-2
7050		Access Hole	10-5
7040		Anchor Counterbore	10-7
7045		Tap Profile End	10-3

Other machining services available in Section 10

T-slot Profiles

1.50" X 3.00" Smooth T-slotted Profile - Six Open T-slots

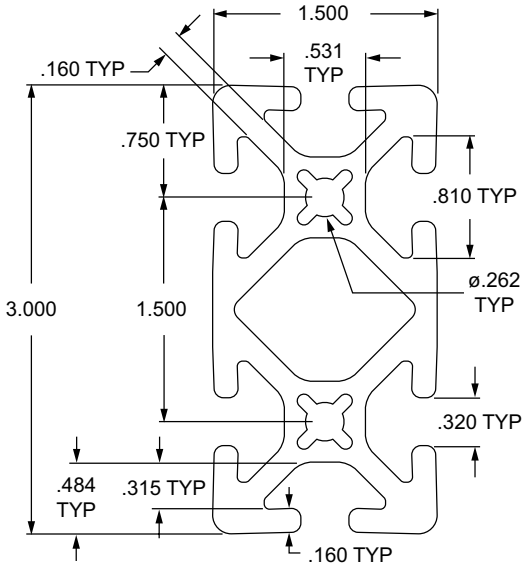

Part No.	Series	Stock Length	Material	Alloy (or comparable)	Finish	Drop Lock	Moment of Inertia	Surface Area	Yield Strength	Modulus of Elasticity	Weight
1530-S	15	120", 242"	Aluminum	6005A – T61	Clear Anodize	2°	IX = 1.8127"⁴ IY = 0.4957"⁴	2.036 in.²	35,000 psi	10,200,000 lb / in.²	0.1985 lb / in.
1530-S-Black		120", 242"			Black Anodize						
1530-S-Black-FB		per inch			Black Anodize						

Standard Machining Services for 1.50" x 3.00"

Service No.	Series	Service Description	Reference Page
7020	15	Cut to Length	10-2
7050		Access Hole	10-5
7040		Anchor Counterbore	10-7
7045		Tap Profile End	10-3

Other machining services available in Section 10

80/20 BUILD YOUR IDEA
More on 80/20® products available at 8020.net

1.50" X 3.00" T-slotted Profile - Six Open T-slots

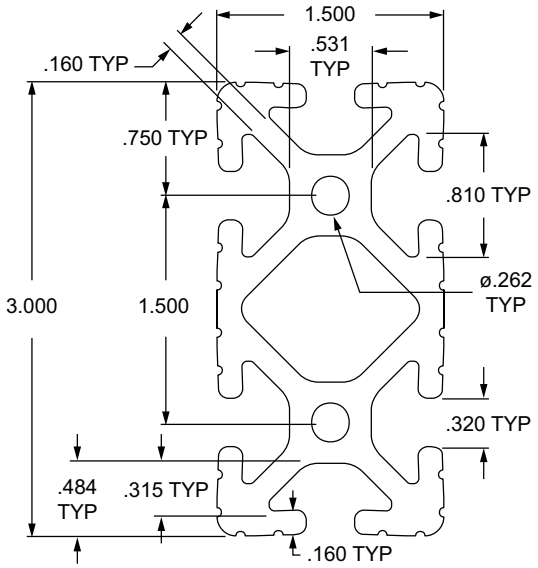

Part No.	Series	Stock Length	Material	Alloy (or comparable)	Finish	Drop Lock	Moment of Inertia	Surface Area	Yield Strength	Modulus of Elasticity	Weight
1530	15	120", 242"	Aluminum	6005A – T61	Clear Anodize	2°	IX = 1.8042"⁴ IY = 0.4824"⁴	2.077 in.²	35,000 psi	10,200,000 lb / in.²	0.2025 lb / in.
1530-Black		120", 242"			Black Anodize						
1530-Black-FB		per inch			Black Anodize						

Standard Machining Services for 1.50" x 3.00"

Service No.	Series	Service Description	Reference Page
7020	15	Cut to Length	10-2
7050		Access Hole	10-5
7040		Anchor Counterbore	10-7
7045		Tap Profile End	10-3

Other machining services available in Section 10

T-slot Profiles

1.50" X 4.50" Lite Smooth Surface T-slotted Profile - Eight Open T-slots

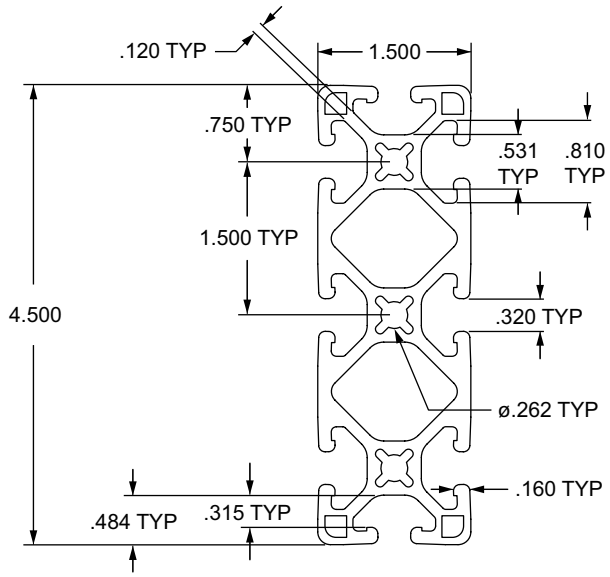

Part No.	Series	Stock Length	Material	Alloy (or comparable)	Finish	Drop Lock	Moment of Inertia	Surface Area	Yield Strength	Modulus of Elasticity	Weight
1545-LS	15	120", 242"	Aluminum	6005A – T61	Clear Anodize	2°	IX = 4.4732in^4	2.492 in.^2	35,000 psi	10,200,000 lb / in.^2	0.242 lb / in.
1545-LS-Black-FB		per inch			Black Anodize		IY = 0.6251in^4				

Standard Machining Services for 1.50" x 4.50"

Service No.	Series	Service Description	Reference Page
7021	15	Cut to Length	10-2
7050		Access Hole	10-5
7040		Anchor Counterbore	10-7
7026		Tap Profile End	10-3

Other machining services available in Section 10

80/20 BUILD YOUR IDEA
More on 80/20® products available at 8020.net

1.50" X 4.50" Smooth Surface T-slotted Profile - Eight Open T-slots

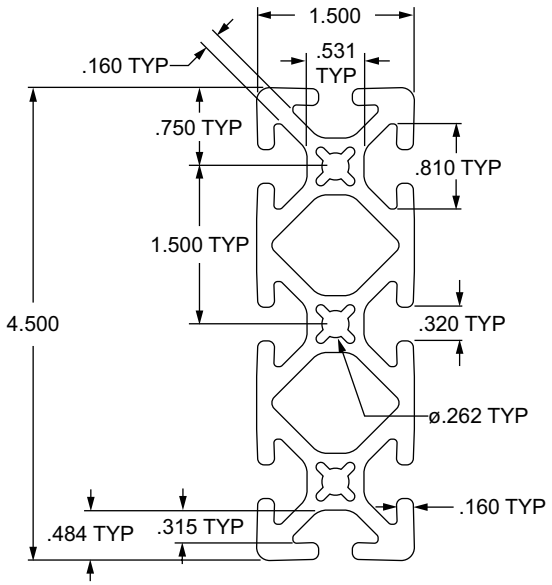

Part No.	Series	Stock Length	Material	Alloy (or comparable)	Finish	Drop Lock	Moment of Inertia	Surface Area	Yield Strength	Modulus of Elasticity	Weight
1545-S	15	120", 242"	Aluminum	6005A – T61	Clear Anodize	2°	IX = 5.6675"⁴ IY = 0.7282"⁴	2.935 in.²	35,000 psi	10,200,000 lb / in.²	0.2862 lb / in.
1545-S-Black-FB		per inch			Black Anodize						

Standard Machining Services for 1.50" x 4.50"

Service No.	Series	Service Description	Reference Page
7021	15	Cut to Length	10-2
7050		Access Hole	10-5
7040		Anchor Counterbore	10-7
7026		Tap Profile End	10-3

Other machining services available in Section 10

T-slot Profiles

1.50" X 4.50" T-slotted Profile - Eight Open T-slots

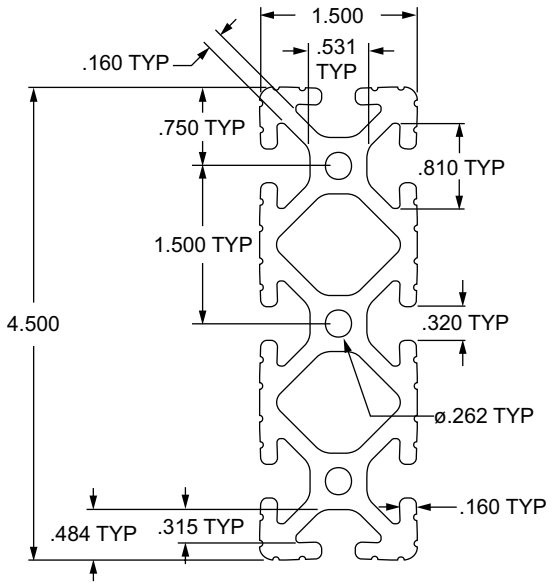

Part No.	Series	Stock Length	Material	Alloy (or comparable)	Finish	Drop Lock	Moment of Inertia	Surface Area	Yield Strength	Modulus of Elasticity	Weight
1545	15	120", 242"	Aluminum	6005A – T61	Clear Anodize	2°	IX = 5.6929"⁴	3.002 in.²	35,000 psi	10,200,000 lb / in.²	0.2927 lb / in.
1545-Black-FB		per inch			Black Anodize		IY = 0.7097"⁴				

Standard Machining Services for 1.50" x 4.50"

Service No.	Series	Service Description	Reference Page
7021	15	Cut to Length	10-2
7050		Access Hole	10-5
7040		Anchor Counterbore	10-7
7026		Tap Profile End	10-3

Other machining services available in Section 10

80/20 BUILD YOUR IDEA
More on 80/20® products available at 8020.net

3.00" X 3.00" Lite Smooth T-slotted Profile - Eight Open T-slots

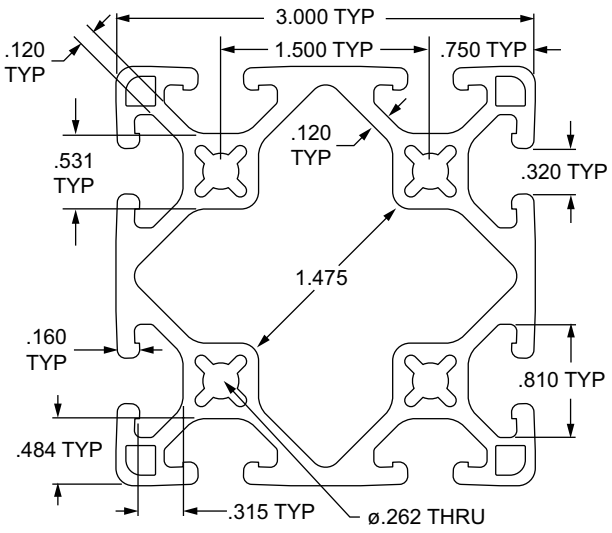

Part No.	Series	Stock Length	Material	Alloy (or comparable)	Finish	Drop Lock	Moment of Inertia	Surface Area	Yield Strength	Modulus of Elasticity	Weight
3030-LS	15	120", 242"	Aluminum	6005A – T61	Clear Anodize	2°	IX = 2.6861"^{4}	2.659 in.^{2}	35,000 psi	10,200,000 lb / in.^{2}	0.2593 lb / in.
3030-LS-Black-FB		per inch			Black Anodize		IY = 2.6861"^{4}				

Standard Machining Services for 3.00" x 3.00"

Service No.	Series	Service Description	Reference Page
7030	15	Cut to Length	10-2
7050		Access Hole	10-5
7040		Anchor Counterbore	10-7
7055		Tap Profile End	10-3

Other machining services available in Section 10

T-slot Profiles

3.00" X 3.00" Lite T-slotted Profile - Eight Open T-slots

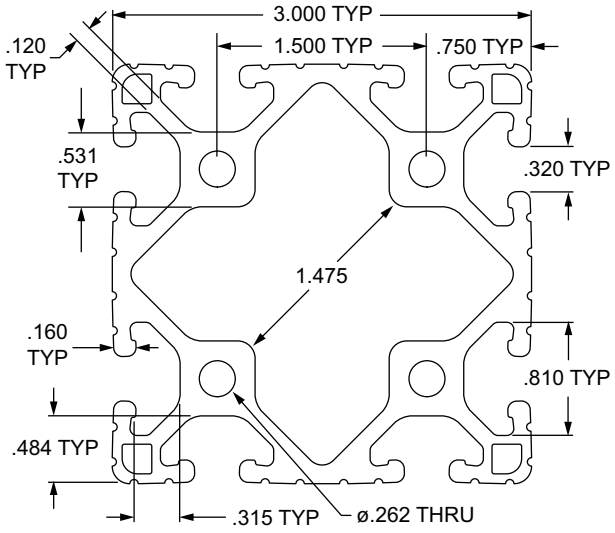

Part No.	Series	Stock Length	Material	Alloy (or comparable)	Finish	Drop Lock	Moment of Inertia	Surface Area	Yield Strength	Modulus of Elasticity	Weight
3030-Lite	15	120", 242"	Aluminum	6005A – T61	Clear Anodize	2°	IX = 2.6959"⁴ IY = 2.6959"⁴	2.763 in.²	35,000 psi	10,200,000 lb / in.²	0.2695 lb / in.
3030-Lite-Black-FB		per inch			Black Anodize						

Standard Machining Services for 3.00" x 3.00"

Service No.	Series	Service Description	Reference Page
7030	15	Cut to Length	10-2
7050		Access Hole	10-5
7040		Anchor Counterbore	10-7
7055		Tap Profile End	10-3

Other machining services available in Section 10

80/20 BUILD YOUR IDEA
More on 80/20® products available at 8020.net

3.00" X 3.00" Smooth Surface T-slotted Profile - Eight Open T-slots

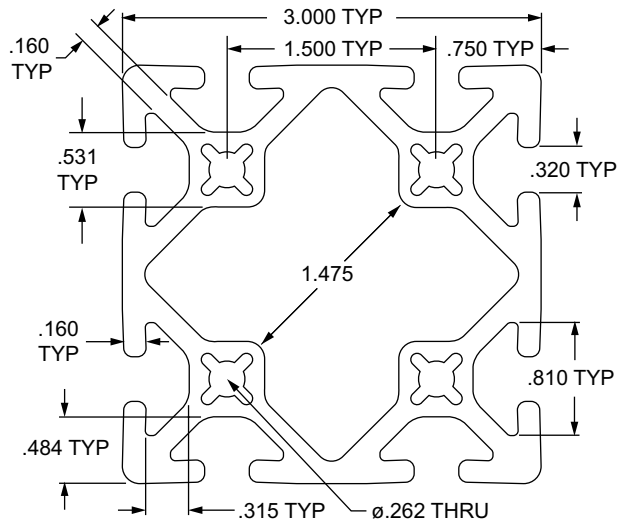

Part No.	Series	Stock Length	Material	Alloy (or comparable)	Finish	Drop Lock	Moment of Inertia	Surface Area	Yield Strength	Modulus of Elasticity	Weight
3030-S	15	120", 242"	Aluminum	6005A – T61	Clear Anodize	2°	IX = 3.3496"⁴ IY = 3.3496"⁴	3.109 in.²	35,000 psi	10,200,000 lb / in.²	0.3032 lb / in.
3030-S-Black		120", 242"			Black Anodize						
3030-S-Black-FB		per inch			Black Anodize						

Standard Machining Services for 3.00" x 3.00"

Service No.	Series	Service Description	Reference Page
7030	15	Cut to Length	10-2
7050		Access Hole	10-5
7040		Anchor Counterbore	10-7
7055		Tap Profile End	10-3

Other machining services available in Section 10

T-slot Profiles

3.00" X 3.00" T-slotted Profile - Eight Open T-slots

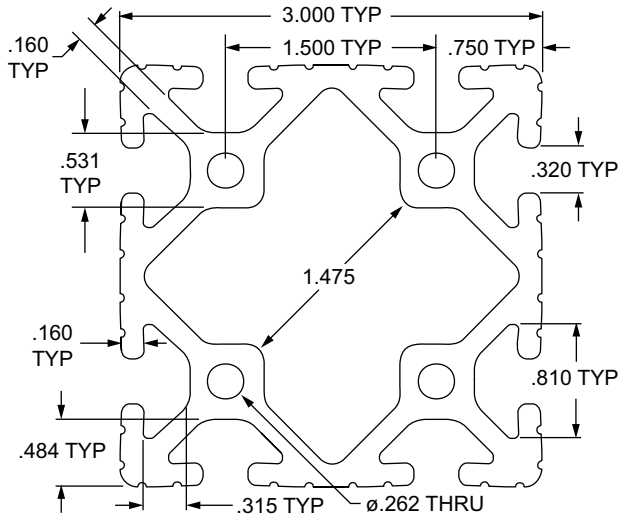

Part No.	Series	Stock Length	Material	Alloy (or comparable)	Finish	Drop Lock	Moment of Inertia	Surface Area	Yield Strength	Modulus of Elasticity	Weight
3030	15	120", 242"	Aluminum	6005A – T61	Clear Anodize	2°	IX = 3.4133"⁴ IY = 3.4133"⁴	3.212 in.²	35,000 psi	10,200,000 lb / in.²	0.3132 lb / in.
3030-Black		120", 242"			Black Anodize						
3030-Black-FB		per inch			Black Anodize						

Standard Machining Services for 3.00" x 3.00"

Service No.	Series	Service Description	Reference Page
7030	15	Cut to Length	10-2
7050		Access Hole	10-5
7040		Anchor Counterbore	10-7
7055		Tap Profile End	10-3

Other machining services available in Section 10

80/20 BUILD YOUR IDEA
More on 80/20® products available at 8020.net

3.00" X 6.00" T-slotted Profile - Twelve Open T-slots

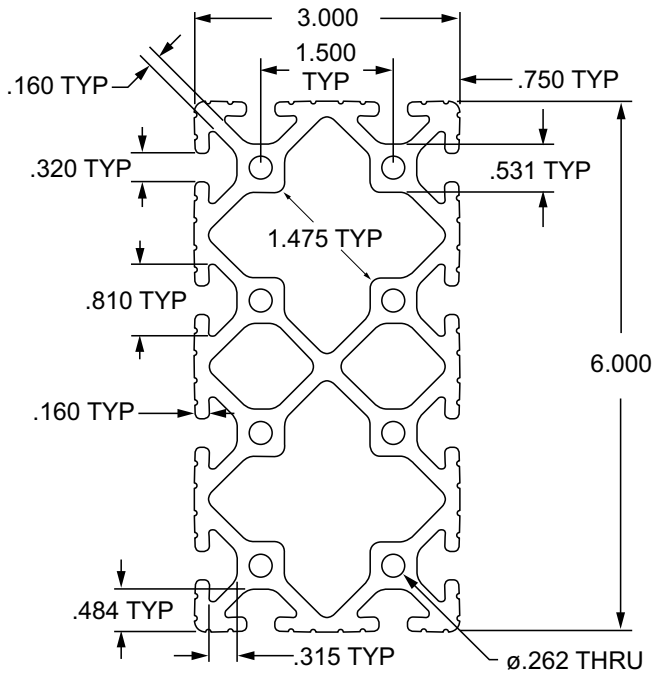

Part No.	Series	Stock Length	Material	Alloy (or comparable)	Finish	Drop Lock	Moment of Inertia	Surface Area	Yield Strength	Modulus of Elasticity	Weight
3060	15	120", 242"	Aluminum	6005A – T61	Clear Anodize	2°	IX = 22.0300"⁴	5.963 in.²	35,000 psi	10,200,000 lb / in.²	0.5815 lb / in.
3060-Black-FB		per inch			Black Anodize		IY = 6.5164"⁴				

Standard Machining Services for 3.00" x 6.00"

Service No.	Series	Service Description	Reference Page
7023	15	Cut to Length	10-2
7050		Access Hole	10-5
7040		Anchor Counterbore	10-7
7029		Tap Profile End	10-3

Other machining services available in Section 10

T-slot Profiles

20mm X 20mm T-slotted Profile - Four Open T-slots

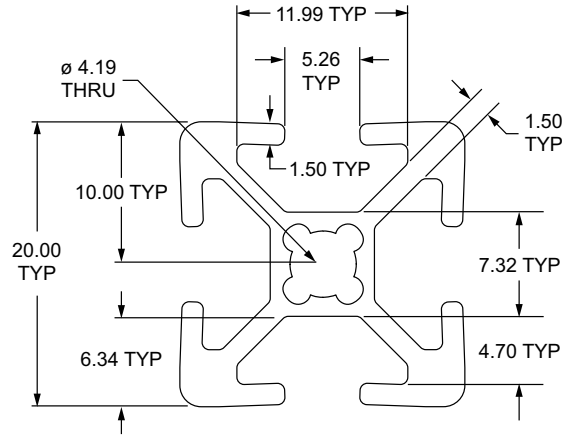

Part No.	Series	Stock Length	Material	Alloy (or comparable)	Finish	Drop Lock	Moment of Inertia	Surface Area	Yield Strength	Modulus of Elasticity	Weight
20-2020	20	3 or 6.050 Meter	Aluminum	6005A – T61	Clear Anodize	2°	IX = 0.6826 cm^4 IY = 0.6826 cm^4	1.591 cm^2	241.1 N / mm^2	70,326.5 N / mm^2	0.4420 kg / m
20-2020-Black-FB		per millimeter			Black Anodize						

Standard Machining Services for 20mm x 20mm

Service No.	Series	Service Description	Reference Page
20-7005	20	Cut to Length	10-2
20-7069		Access Hole	10-5
20-7042		Anchor Counterbore	10-7
20-7063		Tap Profile End	10-3

Other machining services available in Section 10

80/20 BUILD YOUR IDEA
More on 80/20® products available at 8020.net

20mm X 40mm T-slotted Profile - Six Open T-slots

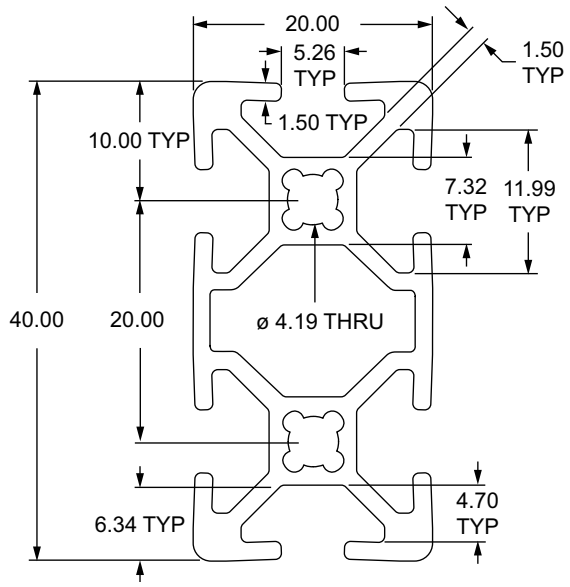

Part No.	Series	Stock Length	Material	Alloy (or comparable)	Finish	Drop Lock	Moment of Inertia	Surface Area	Yield Strength	Modulus of Elasticity	Weight
20-2040	20	3 or 6.050 Meter	Aluminum	6005A – T61	Clear Anodize	2°	IX = 4.5357 cm^4 IY = 1.2133 cm^4	2.750 cm^2	241.1 N / mm^2	70,326.5 N / mm^2	0.7426 kg / m
20-2040-Black-FB		per millimeter			Black Anodize						

Standard Machining Services for 20mm x 40mm

Service No.	Series	Service Description	Reference Page
20-7020	20	Cut to Length	10-2
20-7069		Access Hole	10-5
20-7042		Anchor Counterbore	10-7
20-7047		Tap Profile End	10-3

Other machining services available in Section 10

T-slot Profiles

40mm X 40mm T-slotted Profile - Eight Open T-slots

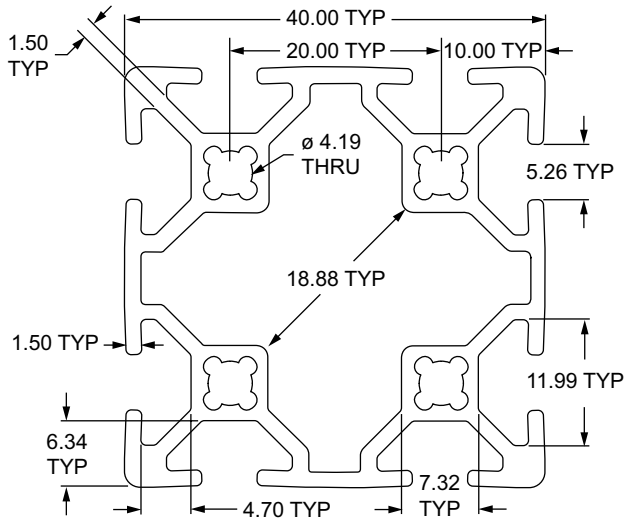

Part No.	Series	Stock Length	Material	Alloy (or comparable)	Finish	Drop Lock	Moment of Inertia	Surface Area	Yield Strength	Modulus of Elasticity	Weight
20-4040	20	3 or 6.050 Meter	Aluminum	6005A – T61	Clear Anodize	2°	IX = 7.8219 cm^4	4.227 cm^2	241.1 N / mm^2	70,326.5 N / mm^2	1.1721 kg / m
20-4040-Black-FB		per millimeter			Black Anodize		IY = 7.8219 cm^4				

Standard Machining Services for 40mm x 40mm

Service No.	Series	Service Description	Reference Page
20-7030	20	Cut to Length	10-2
20-7069		Access Hole	10-5
20-7042		Anchor Counterbore	10-7
20-7067		Tap Profile End	10-3

Other machining services available in Section 10

80/20 BUILD YOUR IDEA
More on 80/20® products available at 8020.net

25mm X 25mm T-slotted Profile - Four Open T-slots

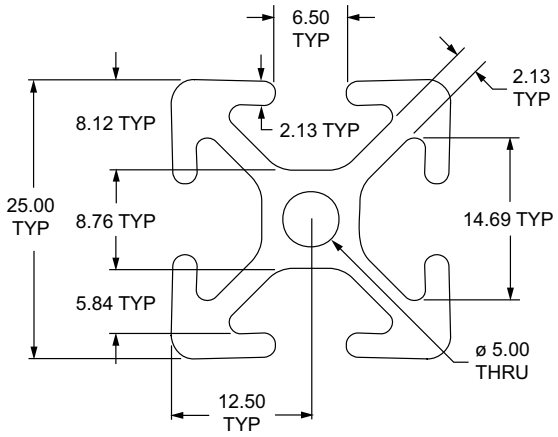

Part No.	Series	Stock Length	Material	Alloy (or comparable)	Finish	Drop Lock	Moment of Inertia	Surface Area	Yield Strength	Modulus of Elasticity	Weight
25-2525	25	3 or 6.050 Meter	Aluminum	6005A – T61	Clear Anodize	2°	IX = 1.7726 cm^4 IY = 1.7726 cm^4	2.746 cm^2	241.1 N / mm^2	70,326.5 N / mm^2	0.7426 kg / m
25-2525-Black		3 or 6.050 Meter			Black Anodize						
25-2525-Black-FB		per millimeter			Black Anodize						

25mm X 25mm T-slotted Profile - Single Open T-slot

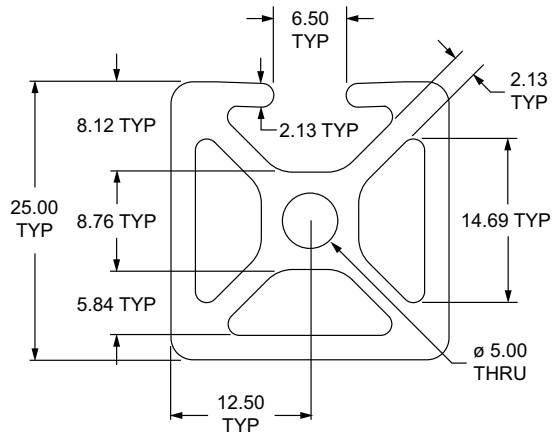

Part No.	Series	Stock Length	Material	Alloy (or comparable)	Finish	Drop Lock	Moment of Inertia	Surface Area	Yield Strength	Modulus of Elasticity	Weight
25-2501	25	3 or 6.050 Meter	Aluminum	6005A – T61	Clear Anodize	2°	IX = 2.1892 cm^4 IY = 1.9873 cm^4	3.185 cm^2	241.1 N / mm^2	70,326.5 N / mm^2	0.8607 kg / m
25-2501-Black-FB		per millimeter			Black Anodize						

Standard Machining Services for 25mm x 25mm

Service No.	Series	Service Description	Reference Page
25-7005	25	Cut to Length	10-2
25-7051		Access Hole	10-5
25-7042		Anchor Counterbore	10-7
25-7063		Tap Profile End	10-3

Other machining services available in Section 10

T-slot Profiles

25mm X 25mm T-slotted Profile - Two Adjacent Open T-slots

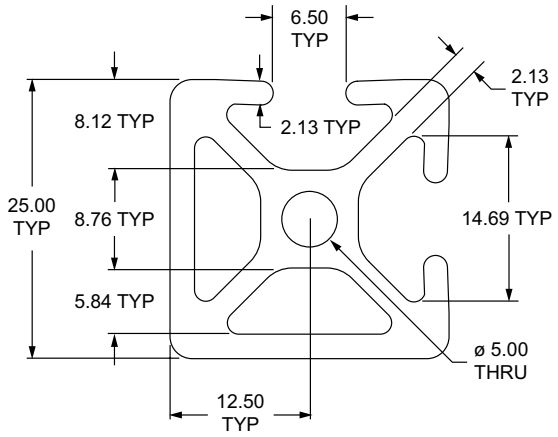

Part No.	Series	Stock Length	Material	Alloy (or comparable)	Finish	Drop Lock	Moment of Inertia	Surface Area	Yield Strength	Modulus of Elasticity	Weight
25-2502 25-2502-Black-FB	25	3 or 6.050 Meter per millimeter	Aluminum	6005A – T61	Clear Anodize Black Anodize	2°	IX = 1.9780 cm^4 IY = 1.9780 cm^4	3.039 cm^2	241.1 N / mm^2	70,326.5 N / mm^2	0.8214 kg / m

25mm X 25mm T-slotted Profile - Three Adjacent Open T-slots

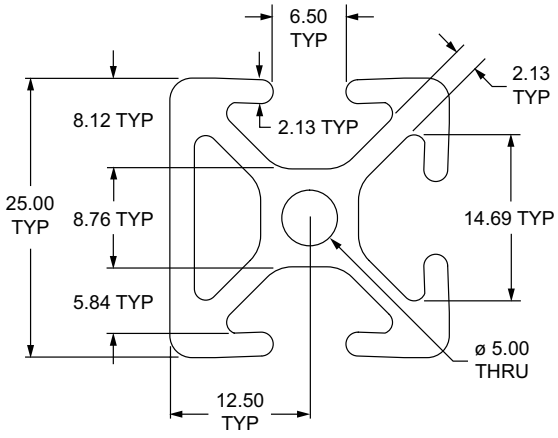

Part No.	Series	Stock Length	Material	Alloy (or comparable)	Finish	Drop Lock	Moment of Inertia	Surface Area	Yield Strength	Modulus of Elasticity	Weight
25-2503 25-2503-Black-FB	25	3 or 6.050 Meter per millimeter	Aluminum	6005A – T61	Clear Anodize Black Anodize	2°	IX = 1.9688 cm^4 IY = 1.7669 cm^4	2.892 cm^2	241.1 N / mm^2	70,326.5 N / mm^2	0.7820 kg / m

Standard Machining Services for 25mm x 25mm

Service No.	Series	Service Description	Reference Page
25-7005	25	Cut to Length	10-2
25-7051		Access Hole	10-5
25-7042		Anchor Counterbore	10-7
25-7063		Tap Profile End	10-3

Other machining services available in Section 10

80/20 BUILD YOUR IDEA
More on 80/20® products available at 8020.net

25mm X 25mm T-slotted Profile - Two Opposite Open T-slots

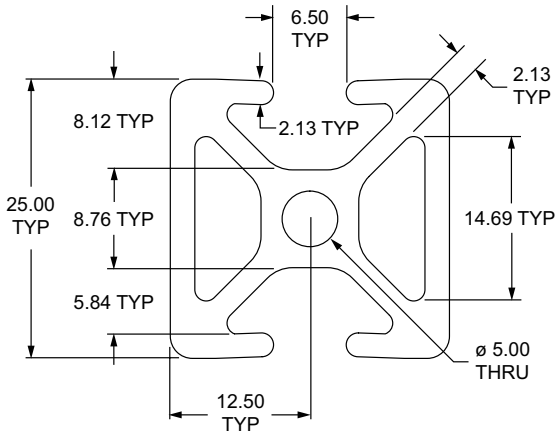

Part No.	Series	Stock Length	Material	Alloy (or comparable)	Finish	Drop Lock	Moment of Inertia	Surface Area	Yield Strength	Modulus of Elasticity	Weight
25-2504 25-2504-Black-FB	25	3 or 6.050 Meter per millimeter	Aluminum	6005A – T61	Clear Anodize Black Anodize	2°	IX = 2.2730 cm^4 IY = 1.7761 cm^4	3.039 cm^2	241.1 N / mm^2	70,326.5 N / mm^2	0.8214 kg / m

25mm X 25mm Quarter Round T-slotted Profile - Two Open T-slots

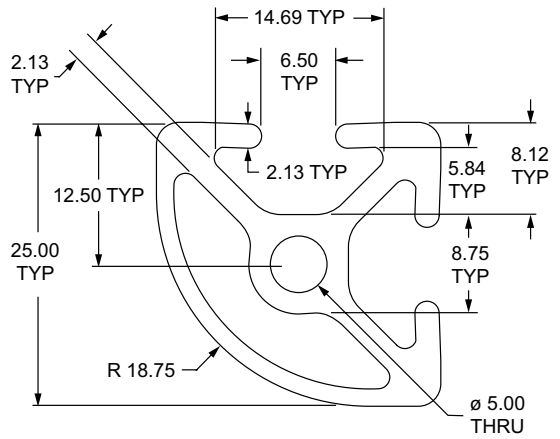

Part No.	Series	Stock Length	Material	Alloy (or comparable)	Finish	Drop Lock	Moment of Inertia	Surface Area	Yield Strength	Modulus of Elasticity	Weight
25-2527 25-2527-Black-FB	25	3 or 6.050 Meter per millimeter	Aluminum	6005A – T61	Clear Anodize Black Anodize	2°	IX = 1.4578 cm^4 IY = 1.4578 cm^4	2.428 cm^2	241.1 N / mm^2	70,326.5 N / mm^2	0.6567 kg / m

Standard Machining Services for 25mm x 25mm

Service No.	Series	Service Description	Reference Page
25-7005	25	Cut to Length	10-2
25-7051		Access Hole	10-5
25-7042		Anchor Counterbore	10-7
25-7063		Tap Profile End	10-3

Other machining services available in Section 10

T-slot Profiles

25mm X 12.5mm T-slotted Profile - Single Open T-slot

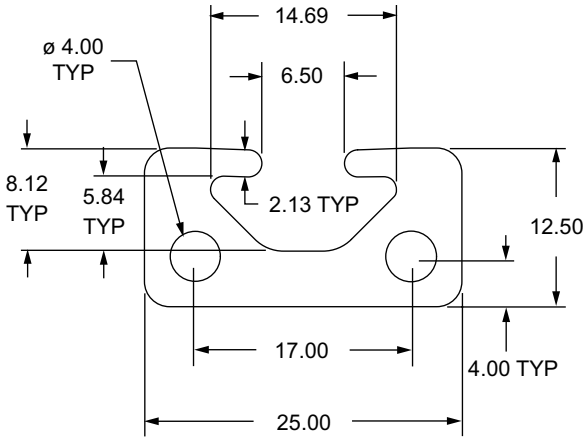

Part No.	Series	Stock Length	Material	Alloy (or comparable)	Finish	Drop Lock	Moment of Inertia	Surface Area	Yield Strength	Modulus of Elasticity	Weight
25-2514	25	3 Meter	Aluminum	6005A – T61	Clear Anodize	2°	IX = 0.3030 cm^4	2.022 cm^2	241.1	70,326.5	0.5458 kg / m
25-2514-Black-FB		per millimeter			Black Anodize		IY = 1.3003 cm^4		N / mm^2	N / mm^2	

Standard Machining Services for 25mm x 12.5mm

Service No.	Series	Service Description	Reference Page
25-7005		Cut to Length	10-2
25-7051		Access Hole	10-5
25-7042	25	Anchor Counterbore	10-7
25-7007		Tap Profile End	10-3
25-7256		Drill Thru & Counterbore	10-8

Other machining services available in Section 10

80/20 BUILD YOUR IDEA
More on 80/20® products available at 8020.net

50mm X 12.5mm T-slotted Profile - Two Adjacent Open T-slots

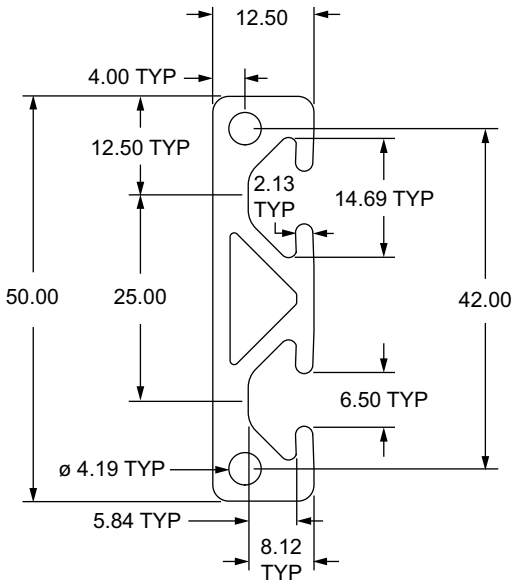

Part No.	Series	Stock Length	Material	Alloy (or comparable)	Finish	Drop Lock	Moment of Inertia	Surface Area	Yield Strength	Modulus of Elasticity	Weight
25-5013	25	3 Meter	Aluminum	6005A – T61	Clear Anodize	2°	IX = 8.8452 cm^4	3.528 cm^2	241.1	70,326.5	0.9627 kg / m
25-5013-Black-FB		per millimeter			Black Anodize		IY = 0.5897 cm^4		N / mm^2	N / mm^2	

Standard Machining Services for 50mm x 12.5mm

Service No.	Series	Service Description	Reference Page
25-7000	25	Cut to Length	10-2
25-7051		Access Hole	10-5
25-7042		Anchor Counterbore	10-7
25-7009		Tap Profile End	10-3
25-7256		Drill Thru & Counterbore	10-8

Other machining services available in Section 10

T-slot Profiles

25mm X 50mm T-slotted Profile - Six Open T-slots

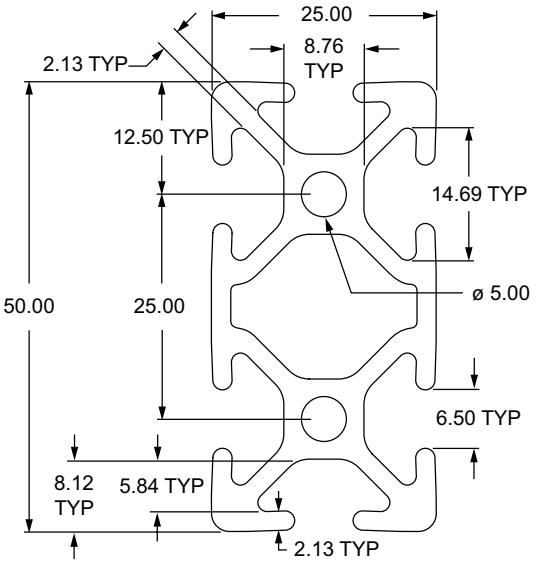

Part No.	Series	Stock Length	Material	Alloy (or comparable)	Finish	Drop Lock	Moment of Inertia	Surface Area	Yield Strength	Modulus of Elasticity	Weight
25-2550	25	3 or 6.050 Meter	Aluminum	6005A – T61	Clear Anodize	2°	IX = 12.1714 cm^4 IY = 3.1966 cm^4	4.857 cm^2	241.1 N / mm^2	70,326.5 N / mm^2	1.3135 kg / m
25-2550-Black		3 or 6.050 Meter			Black Anodize						
25-2550-Black-FB		per millimeter			Black Anodize						

Standard Machining Services for 25mm x 50mm

Service No.	Series	Service Description	Reference Page
25-7000	25	Cut to Length	10-2
25-7051		Access Hole	10-5
25-7042		Anchor Counterbore	10-7
25-7047		Tap Profile End	10-3

Other machining services available in Section 10

80/20 BUILD YOUR IDEA
More on 80/20® products available at 8020.net

25mm X 75mm T-slotted Profile - Eight Open T-slots

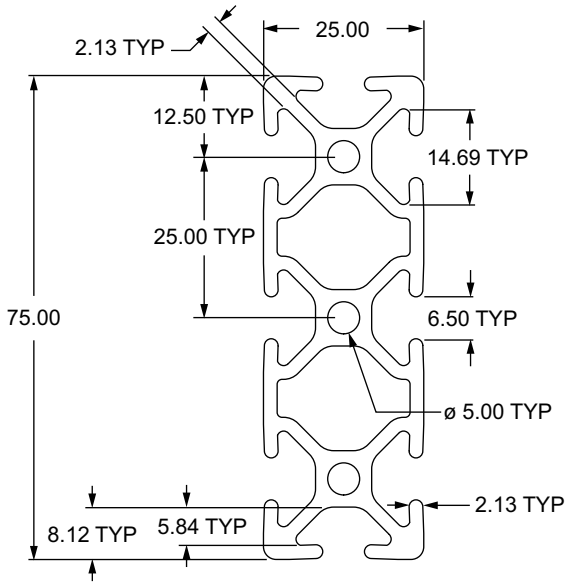

Part No.	Series	Stock Length	Material	Alloy (or comparable)	Finish	Drop Lock	Moment of Inertia	Surface Area	Yield Strength	Modulus of Elasticity	Weight
25-2576	25	3 or 6.050 Meter	Aluminum	6005A – T61	Clear Anodize	2°	IX = 37.2852 cm^4	6.889 cm^2	241.1	70,326.5	1.8664 kg / m
25-2576-Black-FB		per millimeter			Black Anodize		IY = 4.5921 cm^4		N / mm^2	N / mm^2	

Standard Machining Services for 25mm x 75mm

Service No.	Series	Service Description	Reference Page
25-7003	25	Cut to Length	10-2
25-7051		Access Hole	10-5
25-7042		Anchor Counterbore	10-7
25-7037		Tap Profile End	10-3

Other machining services available in Section 10

T-slot Profiles

50mm X 50mm T-slotted Profile - Eight Open T-slots

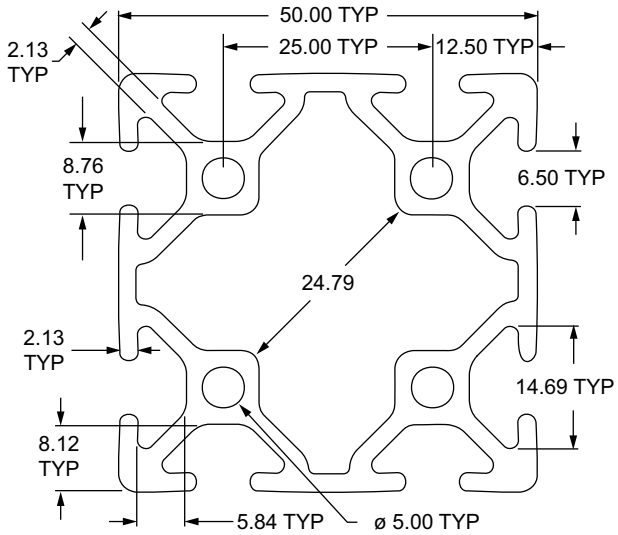

Part No.	Series	Stock Length	Material	Alloy (or comparable)	Finish	Drop Lock	Moment of Inertia	Surface Area	Yield Strength	Modulus of Elasticity	Weight
25-5050	25	3 or 6.050 Meter	Aluminum	6005A – T61	Clear Anodize	2°	IX = 21.1231 cm^4 IY = 21.1231 cm^4	7.487 cm^2	241.1 N / mm^2	70,326.5 N / mm^2	2.0239 kg / m
25-5050-Black		3 or 6.050 Meter			Black Anodize						
25-5050-Black-FB		per millimeter			Black Anodize						

Standard Machining Services for 50mm x 50mm

Service No.	Series	Service Description	Reference Page
25-7012	25	Cut to Length	10-2
25-7051		Access Hole	10-5
25-7042		Anchor Counterbore	10-7
25-7067		Tap Profile End	10-3

Other machining services available in Section 10

80/20 BUILD YOUR IDEA
More on 80/20® products available at 8020.net

50mm X 100mm T-slotted Profile - Twelve Open T-slots

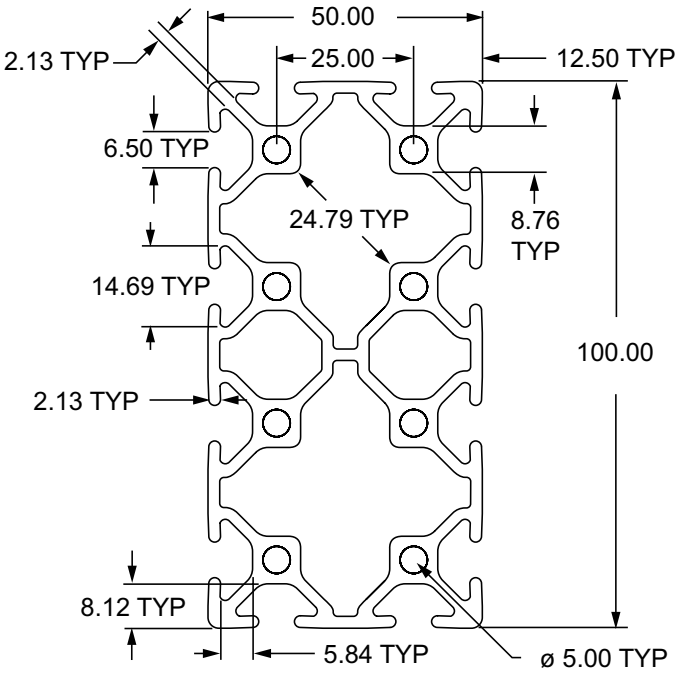

Part No.	Series	Stock Length	Material	Alloy (or comparable)	Finish	Drop Lock	Moment of Inertia	Surface Area	Yield Strength	Modulus of Elasticity	Weight
25-5010	25	3 or 6.050 Meter	Aluminum	6005A – T61	Clear Anodize	2°	IX = 132.0109 cm^4	13.743 cm^2	241.1	70,326.5	3.7133 kg / m
25-5010-Black-FB		per millimeter			Black Anodize		IY = 39.1136 cm^4		N / mm^2	N / mm^2	

Standard Machining Services for 50mm x 100mm

Service No.	Series	Service Description	Reference Page
25-7013	25	Cut to Length	10-2
25-7051		Access Hole	10-5
25-7042		Anchor Counterbore	10-7
25-7039		Tap Profile End	10-3

Other machining services available in Section 10

T-slot Profiles

30mm X 30mm T-slotted Profile - Four Open T-slots

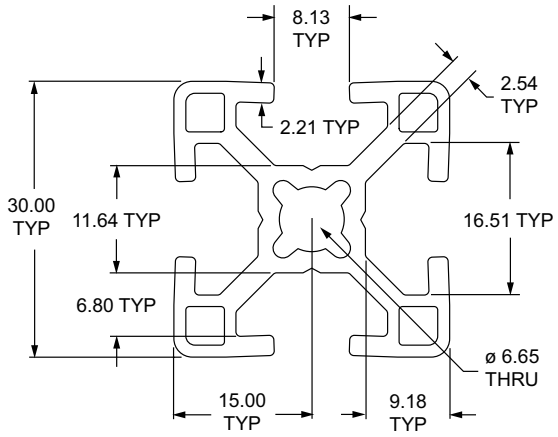

Part No.	Series	Stock Length	Material	Alloy (or comparable)	Finish	Drop Lock	Moment of Inertia	Surface Area	Yield Strength	Modulus of Elasticity	Weight
30-3030 30-3030-Black-FB	30	3 or 6.050 Meter per millimeter	Aluminum	6005A – T61	Clear Anodize Black Anodize	2°	IX = 2.7221 cm^4 IY = 2.7221 cm^4	3.144 cm^2	241.1 N / mm^2	70,326.5 N / mm^2	0.8715 kg / m

30mm X 30mm T-slotted Profile - Single Open T-slot

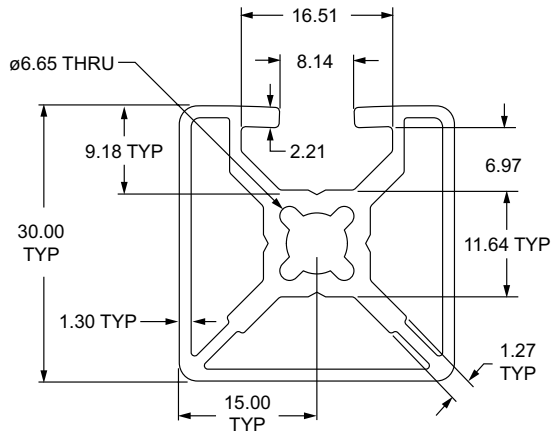

Part No.	Series	Stock Length	Material	Alloy (or comparable)	Finish	Drop Lock	Moment of Inertia	Surface Area	Yield Strength	Modulus of Elasticity	Weight
30-3001 30-3001-Black-FB	30	3 or 6.050 Meter per millimeter	Aluminum	6005A – T61	Clear Anodize Black Anodize	2°	IX = 2.7176 cm^4 IY = 2.6691 cm^4	3.067 cm^2	241.1 N / mm^2	70,326.5 N / mm^2	0.8220 kg / m

Standard Machining Services for 30mm x 30mm

Service No.	Series	Service Description	Reference Page
30-7010	30	Cut to Length	10-2
30-7246		Access Hole	10-5
30-7044		Anchor Counterbore	10-7
30-7059		Tap Profile End	10-3
30-7034		Bolt Connector	10-22

Other machining services available in Section 10

80/20 BUILD YOUR IDEA
More on 80/20® products available at 8020.net

30mm X 30mm T-slotted Profile - Two Adjacent Open T-slots

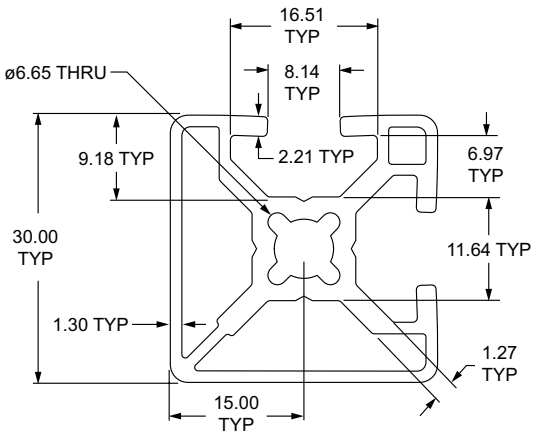

Part No.	Series	Stock Length	Material	Alloy (or comparable)	Finish	Drop Lock	Moment of Inertia	Surface Area	Yield Strength	Modulus of Elasticity	Weight
30-3002 30-3002-Black-FB	30	3 or 6.050 Meter per millimeter	Aluminum	6005A – T61	Clear Anodize Black Anodize	2°	IX = 2.6758 cm^4 IY = 2.6758 cm^4	3.066 cm^2	241.1 N / mm^2	70,326.5 N / mm^2	0.8217 kg / m

30mm X 30mm T-slotted Profile - Three Adjacent Open T-slots

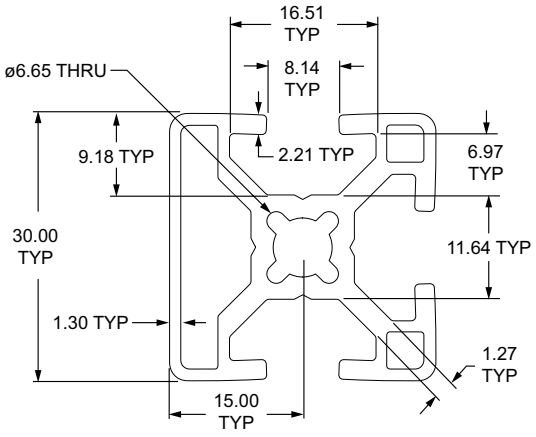

Part No.	Series	Stock Length	Material	Alloy (or comparable)	Finish	Drop Lock	Moment of Inertia	Surface Area	Yield Strength	Modulus of Elasticity	Weight
30-3003 30-3003-Black-FB	30	3 or 6.050 Meter per millimeter	Aluminum	6005A – T61	Clear Anodize Black Anodize	2°	IX = 2.6832 cm^4 IY = 2.6343 cm^4	3.065 cm^2	241.1 N / mm^2	70,326.5 N / mm^2	0.8214 kg / m

Standard Machining Services for 30mm x 30mm

Service No.	Series	Service Description	Reference Page
30-7010		Cut to Length	10-2
30-7246		Access Hole	10-5
30-7044	30	Anchor Counterbore	10-7
30-7059		Tap Profile End	10-3
30-7034		Bolt Connector	10-22

Other machining services available in Section 10

T-slot Profiles

30mm X 30mm T-slotted Profile - Two Opposite Open T-slots

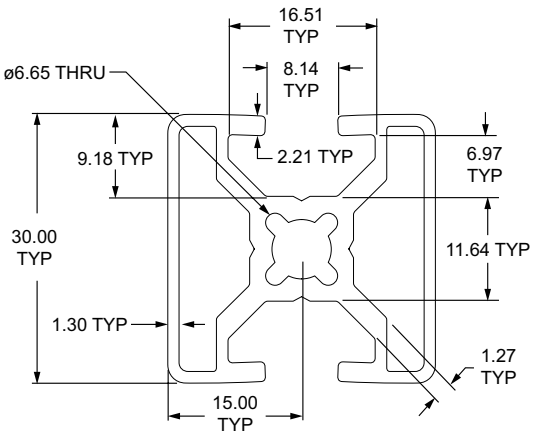

Part No.	Series	Stock Length	Material	Alloy (or comparable)	Finish	Drop Lock	Moment of Inertia	Surface Area	Yield Strength	Modulus of Elasticity	Weight
30-3004 30-3004-Black-FB	30	3 or 6.050 Meter per millimeter	Aluminum	6005A – T61	Clear Anodize Black Anodize	2°	IX = 2.6212 cm^4 IY = 2.5234 cm^4	2.986 cm^2	241.1 N / mm^2	70,326.5 N / mm^2	0.8002 kg / m

30mm X 30mm Quarter Round T-slotted Profile - Two Open T-slots

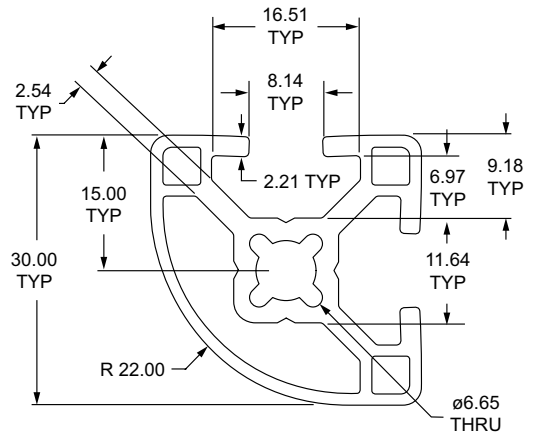

Part No.	Series	Stock Length	Material	Alloy (or comparable)	Finish	Drop Lock	Moment of Inertia	Surface Area	Yield Strength	Modulus of Elasticity	Weight
30-3022 30-3022-Black-FB	30	3 or 6.050 Meter per millimeter	Aluminum	6005A – T61	Clear Anodize Black Anodize	2°	IX = 2.2948 cm^4 IY = 2.2948 cm^4	2.840 cm^2	241.1 N / mm^2	70,326.5 N / mm^2	0.7612 kg / m

Standard Machining Services for 30mm x 30mm

Service No.	Series	Service Description	Reference Page
30-7010	30	Cut to Length	10-2
30-7246		Access Hole	10-5
30-7044		Anchor Counterbore	10-7
30-7059		Tap Profile End	10-3
30-7034		Bolt Connector	10-22

Other machining services available in Section 10

80/20 BUILD YOUR IDEA
More on 80/20® products available at 8020.net

30mm X 60mm T-slotted Profile - Six Open T-slots

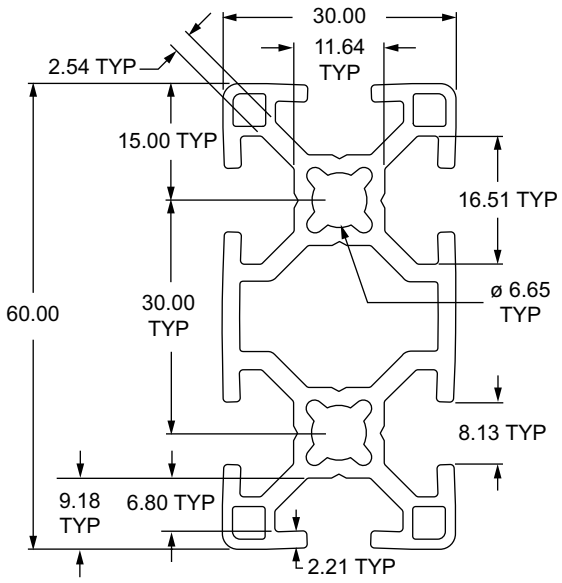

Part No.	Series	Stock Length	Material	Alloy (or comparable)	Finish	Drop Lock	Moment of Inertia	Surface Area	Yield Strength	Modulus of Elasticity	Weight
30-3060	30	3 or 6.050 Meter	Aluminum	6005A – T61	Clear Anodize	2°	IX = 5.4332 cm^4	5.928 cm^2	241.1	70,326.5	1.6428 kg / m
30-3060-Black-FB		per millimeter			Black Anodize		IY = 19.6933 cm^4		N / mm^2	N / mm^2	

Standard Machining Services for 30mm x 60mm

Service No.	Series	Service Description	Reference Page
30-7020	30	Cut to Length	10-2
30-7246		Access Hole	10-5
30-7044		Anchor Counterbore	10-7
30-7048		Tap Profile End	10-3

Other machining services available in Section 10

T-slot Profiles

60mm X 60mm T-slotted Profile - Eight Open T-slots

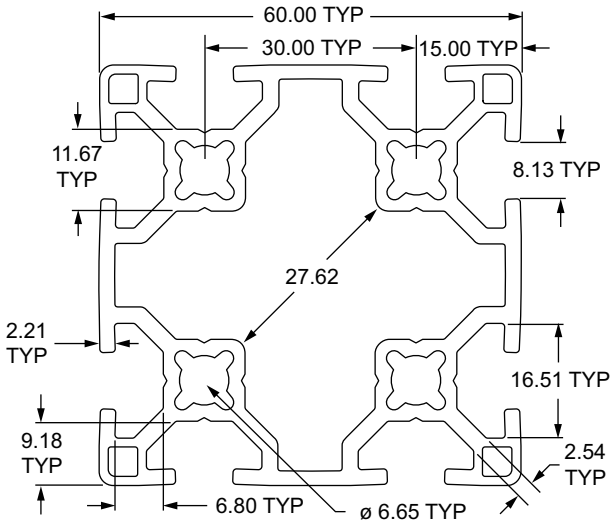

Part No.	Series	Stock Length	Material	Alloy (or comparable)	Finish	Drop Lock	Moment of Inertia	Surface Area	Yield Strength	Modulus of Elasticity	Weight
30-6060	30	3 or 6.050 Meter	Aluminum	6005A – T61	Clear Anodize	2°	IX = 36.3307 cm^4	9.299 cm^2	241.1	70,326.5	2.5787 kg / m
30-6060-Black-FB		per millimeter			Black Anodize		IY = 36.3307 cm^4		N / mm^2	N / mm^2	

Standard Machining Services for 60mm x 60mm

Service No.	Series	Service Description	Reference Page
30-7030	30	Cut to Length	10-2
30-7246		Access Hole	10-5
30-7044		Anchor Counterbore	10-7
30-7056		Tap Profile End	10-3

Other machining services available in Section 10

80/20 BUILD YOUR IDEA
More on 80/20® products available at 8020.net

40mm X 40mm Ultra-Lite T-slotted Profile - Four Open T-slots

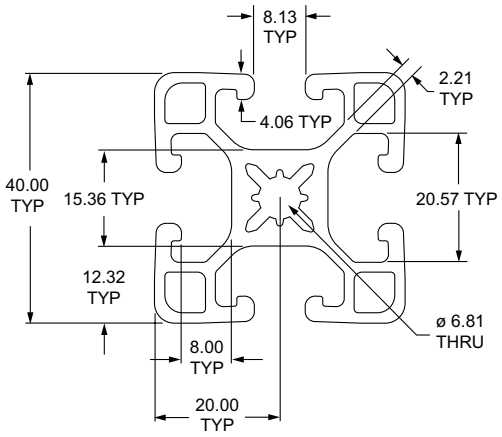

Part No.	Series	Stock Length	Material	Alloy (or comparable)	Finish	Drop Lock	Moment of Inertia	Surface Area	Yield Strength	Modulus of Elasticity	Weight
40-4040-UL	40	3 or 6.050 Meter	Aluminum	6005A – T61	Clear Anodize	2°	IX = 8.7059 cm^4 IY = 8.7059 cm^4	5.750 cm^2	241.1 N / mm^2	70,326.5 N / mm^2	1.5533 kg / m
40-4040-UL-Black		3 or 6.050 Meter			Black Anodize						
40-4040-UL-Black-FB		per millimeter			Black Anodize						

40mm X 40mm Lite T-slotted Profile - Four Open T-slots

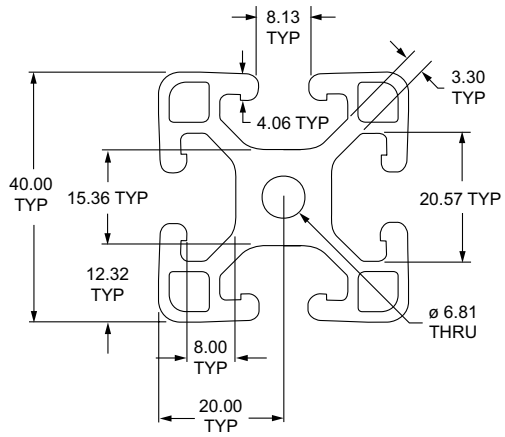

Part No.	Series	Stock Length	Material	Alloy (or comparable)	Finish	Drop Lock	Moment of Inertia	Surface Area	Yield Strength	Modulus of Elasticity	Weight
40-4040-Lite	40	3 or 6.050 Meter	Aluminum	6005A – T61	Clear Anodize	2°	IX = 9.3983 cm^4 IY = 9.3983 cm^4	6.608 cm^2	241.1 N / mm^2	70,326.5 N / mm^2	1.7860 kg / m
40-4040-Lite-Black		3 or 6.050 Meter			Black Anodize						
40-4040-Lite-Black-FB		per millimeter			Black Anodize						

Standard Machining Services for 40mm x 40mm

Service No.	Series	Service Description	Reference Page
40-7010	40	Cut to Length	10-2
40-7050		Access Hole	10-5
30-7044		Anchor Counterbore	10-7
40-7059		Tap Profile End	10-3

Other machining services available in Section 10

T-slot Profiles

40mm X 40mm T-slotted Profile - Four Open T-slots

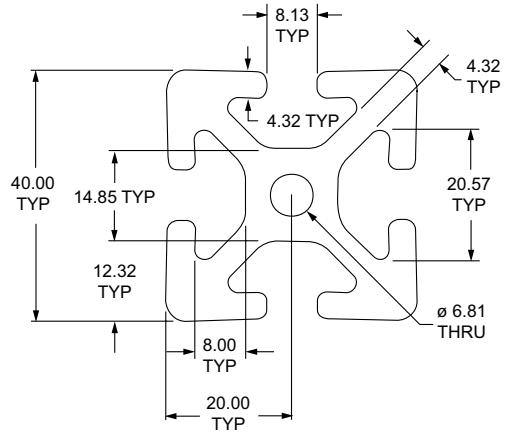

Part No.	Series	Stock Length	Material	Alloy (or comparable)	Finish	Drop Lock	Moment of Inertia	Surface Area	Yield Strength	Modulus of Elasticity	Weight
40-4040	40	3 or 6.050 Meter	Aluminum	6005A – T61	Clear Anodize	2°	IX = 13.7870 cm^4 IY = 13.7870 cm^4	8.742 cm^2	241.1 N / mm^2	70,326.5 N / mm^2	2.3640 kg / m
40-4040-Black		3 or 6.050 Meter			Black Anodize						
40-4040-Black-FB		per millimeter			Black Anodize						

40mm X 40mm T-slotted Profile - Single Open T-slot

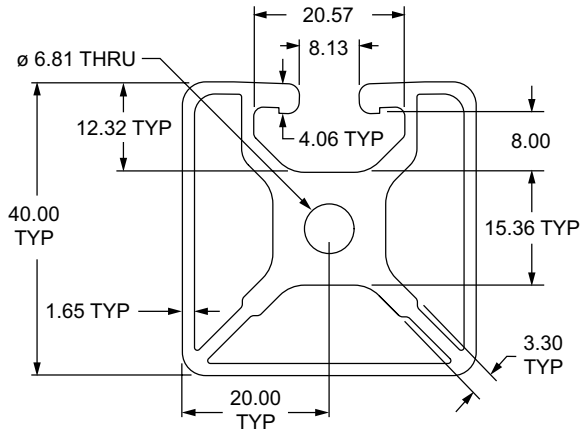

Part No.	Series	Stock Length	Material	Alloy (or comparable)	Finish	Drop Lock	Moment of Inertia	Surface Area	Yield Strength	Modulus of Elasticity	Weight
40-4001	40	3 or 6.050 Meter	Aluminum	6005A – T61	Clear Anodize	2°	IX = 8.5389 cm^4 IY = 8.2599 cm^4	5.968 cm^2	241.1 N / mm^2	70,326.5 N / mm^2	1.6142 kg / m
40-4001-Black-FB		per millimeter			Black Anodize						

Standard Machining Services for 40mm x 40mm

Service No.	Series	Service Description	Reference Page
40-7010	40	Cut to Length	10-2
40-7050		Access Hole	10-5
30-7044		Anchor Counterbore	10-7
40-7059		Tap Profile End	10-3

Other machining services available in Section 10

80/20 BUILD YOUR IDEA
More on 80/20® products available at 8020.net

40mm X 40mm T-slotted Profile - Two Adjacent Open T-slots

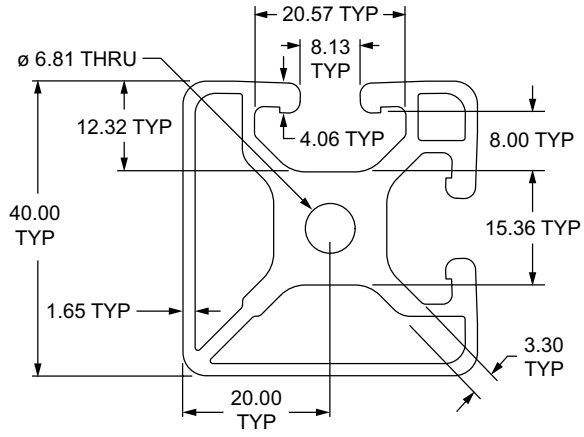

Part No.	Series	Stock Length	Material	Alloy (or comparable)	Finish	Drop Lock	Moment of Inertia	Surface Area	Yield Strength	Modulus of Elasticity	Weight
40-4002	40	3 or 6.050 Meter	Aluminum	6005A – T61	Clear Anodize	2°	IX = 8.6303 cm^4 IY = 8.6303 cm^4	6.118 cm^2	241.1 N / mm^2	70,326.5 N / mm^2	1.6535 kg / m
40-4002-Black		3 or 6.050 Meter			Black Anodize						
40-4002-Black-FB		per millimeter			Black Anodize						

40mm X 40mm T-slotted Profile - Three Adjacent Open T-slots

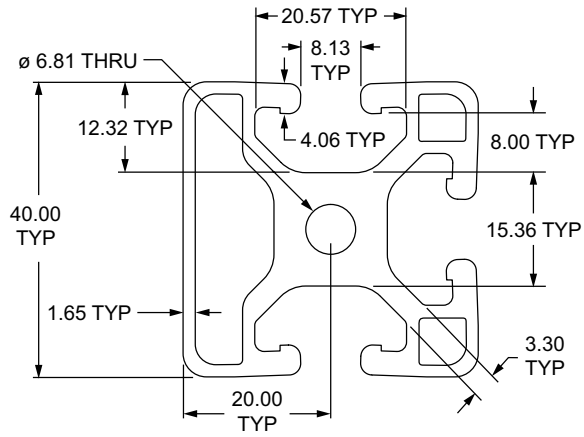

Part No.	Series	Stock Length	Material	Alloy (or comparable)	Finish	Drop Lock	Moment of Inertia	Surface Area	Yield Strength	Modulus of Elasticity	Weight
40-4003	40	3 or 6.050 Meter	Aluminum	6005A – T61	Clear Anodize	2°	IX = 9.0094 cm^4 IY = 8.7823 cm^4	6.268 cm^2	241.1 N / mm^2	70,326.5 N / mm^2	1.6947 kg / m
40-4003-Black		3 or 6.050 Meter			Black Anodize						
40-4003-Black-FB		per millimeter			Black Anodize						

Standard Machining Services for 40mm x 40mm

Service No.	Series	Service Description	Reference Page
40-7010	40	Cut to Length	10-2
40-7050		Access Hole	10-5
30-7044		Anchor Counterbore	10-7
40-7059		Tap Profile End	10-3

Other machining services available in Section 10

T-slot Profiles

40mm X 40mm T-slotted Profile - Two Opposite Open T-slots

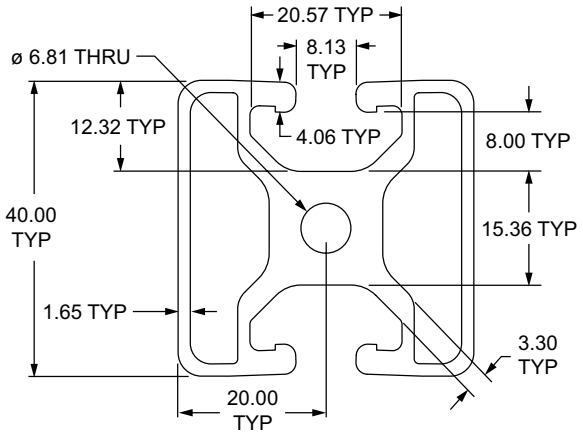

Part No.	Series	Stock Length	Material	Alloy (or comparable)	Finish	Drop Lock	Moment of Inertia	Surface Area	Yield Strength	Modulus of Elasticity	Weight
40-4004 40-4004-Black-FB	40	3 or 6.050 Meter per millimeter	Aluminum	6005A – T61	Clear Anodize Black Anodize	2°	IX = 8.6050 cm⁴ IY = 8.0430 cm⁴	5.954 cm²	241.1 N / mm²	70,326.5 N / mm²	1.6106 kg / m

40mm X 40mm Quarter Round Lite T-slotted Profile - Two Open T-slots

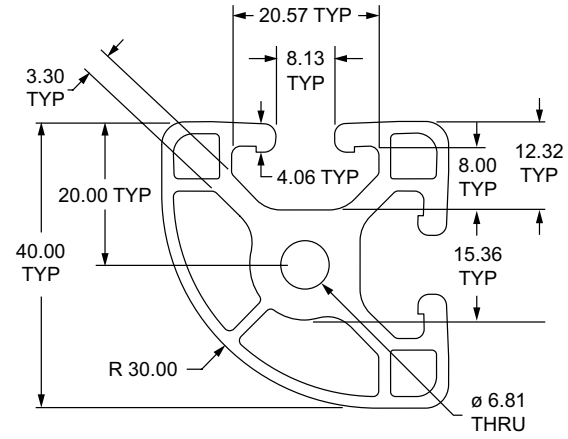

Part No.	Series	Stock Length	Material	Alloy (or comparable)	Finish	Drop Lock	Moment of Inertia	Surface Area	Yield Strength	Modulus of Elasticity	Weight
40-4030-Lite 40-4030-Lite-Black-FB	40	3 or 6.050 Meter per millimeter	Aluminum	6005A – T61	Clear Anodize Black Anodize	2°	IX = 7.5590 cm⁴ IY = 7.5590 cm⁴	5.729 cm²	241.1 N / mm²	70,326.5 N / mm²	1.5497 kg / m

Standard Machining Services for 40mm x 40mm

Service No.	Series	Service Description	Reference Page
40-7010	40	Cut to Length	10-2
40-7050		Access Hole	10-5
30-7044		Anchor Counterbore	10-7
40-7059		Tap Profile End	10-3

Other machining services available in Section 10

80/20 BUILD YOUR IDEA
More on 80/20® products available at 8020.net

40mm X 40mm Lite 45 Degree T-slotted Profile - Two Adjacent Open T-slots

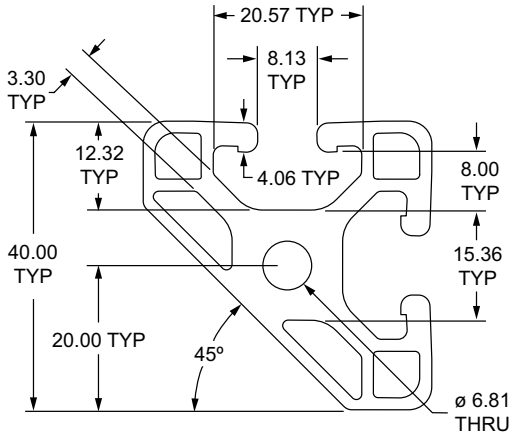

Part No.	Series	Stock Length	Material	Alloy (or comparable)	Finish	Drop Lock	Moment of Inertia	Surface Area	Yield Strength	Modulus of Elasticity	Weight
40-4045-Lite	40	3 or 6.050 Meter	Aluminum	6005A – T61	Clear Anodize	2°	IX = 6.9991 cm^4	5.541 cm^2	241.1	70,326.5	1.4996 kg / m
40-4045-Lite-Black-FB		per millimeter			Black Anodize		IY = 7.0047 cm^4		N / mm^2	N / mm^2	

Standard Machining Services for 40mm x 40mm

Service No.	Series	Service Description	Reference Page
40-7010	40	Cut to Length	10-2
40-7050		Access Hole	10-5
30-7044		Anchor Counterbore	10-7
40-7059		Tap Profile End	10-3

Other machining services available in Section 10

T-slot Profiles

40mm T-slotted Profile 30 Degree Radius - Two Opposite Open T-slots

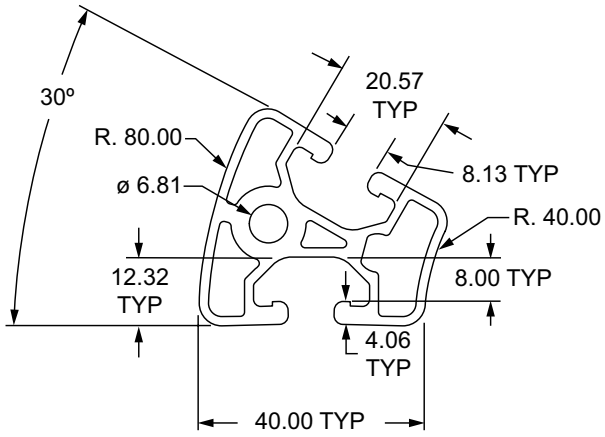

Part No.	Series	Stock Length	Material	Alloy (or comparable)	Finish	Drop Lock	Moment of Inertia	Surface Area	Yield Strength	Modulus of Elasticity	Weight
40-4093	40	3 Meter	Aluminum	6005A – T61	Clear Anodize	2°	—	4.711 cm^2	241.1 N / mm^2	70,326.5 N / mm^2	1.2742 kg / m
40-4093-Black-FB		per millimeter			Black Anodize						

40mm T-slotted Profile 45 Degree Radius - Two Opposite Open T-slots

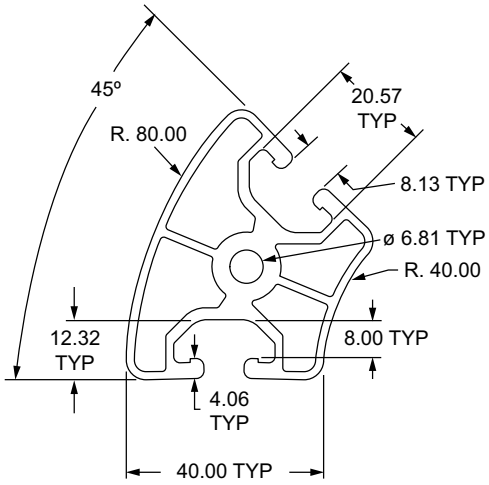

Part No.	Series	Stock Length	Material	Alloy (or comparable)	Finish	Drop Lock	Moment of Inertia	Surface Area	Yield Strength	Modulus of Elasticity	Weight
40-4094	40	3 Meter	Aluminum	6005A – T61	Clear Anodize	2°	—	6.309 cm^2	241.1 N / mm^2	70,326.5 N / mm^2	1.7054 kg / m
40-4094-Black		3 Meter			Black Anodize						
40-4094-Black-FB		per millimeter			Black Anodize						

Standard Machining Services for 40mm Radius

Service No.	Series	Service Description	Reference Page
40-7020	40	Cut to Length	10-2
40-7059		Tap Profile End	10-3

Other machining services available in Section 10

80/20 BUILD YOUR IDEA
More on 80/20® products available at 8020.net

40mm T-slotted Profile 60 Degree Radius - Two Opposite Open T-slots

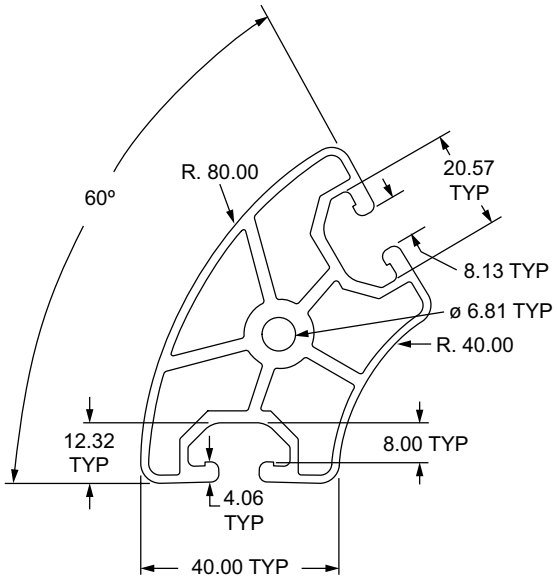

Part No.	Series	Stock Length	Material	Alloy (or comparable)	Finish	Drop Lock	Moment of Inertia	Surface Area	Yield Strength	Modulus of Elasticity	Weight
40-4096	40	3 Meter	Aluminum	6005A – T61	Clear Anodize	2°	—	7.828 cm^2	241.1 N / mm^2	70,326.5 N / mm^2	2.1170 kg / m
40-4096-Black-FB		per millimeter			Black Anodize						

Standard Machining Services for 40mm Radius

Service No.	Series	Service Description	Reference Page
40-7020	40	Cut to Length	10-2
40-7059		Tap Profile End	10-3

Other machining services available in Section 10

T-slot Profiles

40mm X 20mm T-slotted Profile - Single Open T-slot

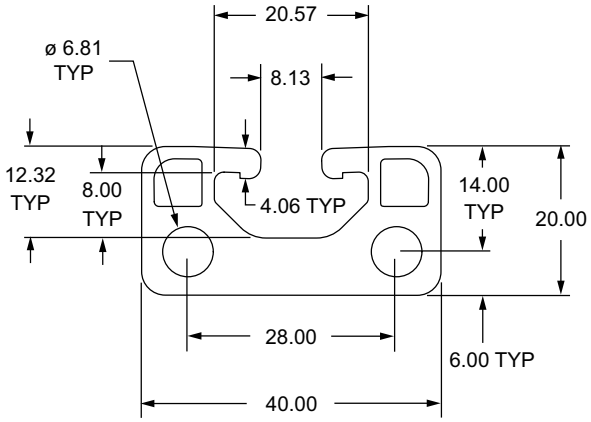

Part No.	Series	Stock Length	Material	Alloy (or comparable)	Finish	Drop Lock	Moment of Inertia	Surface Area	Yield Strength	Modulus of Elasticity	Weight
40-4020	40	3 Meter	Aluminum	6005A – T61	Clear Anodize	2°	IX = 1.8260 cm^4	4.550 cm^2	241.1	70,326.5	1.2312 kg / m
40-4020-Black-FB		per millimeter			Black Anodize		IY = 6.6587 cm^4		N / mm^2	N / mm^2	

Standard Machining Services for 40mm x 20mm

Service No.	Series	Service Description	Reference Page
40-7010	40	Cut to Length	10-2
40-7050		Access Hole	10-5
40-7044		Anchor Counterbore	10-7
40-7015		Tap Profile End	10-3
40-7257		Drill Thru & Counterbore	10-8

Other machining services available in Section 10

80/20 BUILD YOUR IDEA
More on 80/20® products available at 8020.net

80mm X 20mm T-slotted Profile - Two Adjacent Open T-slots

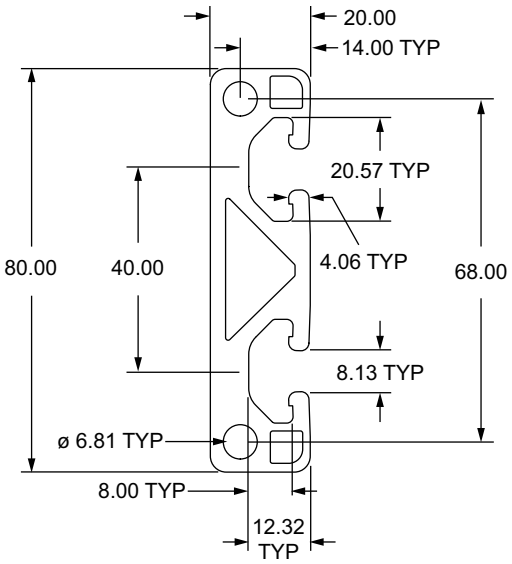

Part No.	Series	Stock Length	Material	Alloy (or comparable)	Finish	Drop Lock	Moment of Inertia	Surface Area	Yield Strength	Modulus of Elasticity	Weight
40-8020	40	3 Meter	Aluminum	6005A – T61	Clear Anodize	2°	IX = 49.6609 cm^4 IY = 3.7286 cm^4	8.482 cm^2	241.1 N / mm^2	70,326.5 N / mm^2	2.2960 kg / m
40-8020-Black-FB		per millimeter			Black Anodize						

Standard Machining Services for 80mm x 20mm

Service No.	Series	Service Description	Reference Page
40-7020	40	Cut to Length	10-2
40-7050		Access Hole	10-5
40-7044		Anchor Counterbore	10-7
40-7017		Tap Profile End	10-3
40-7257		Drill Thru & Counterbore	10-8

Other machining services available in Section 10

T-slot Profiles

40mm X 80mm Ultra-Lite T-slotted Profile - Six Open T-slots

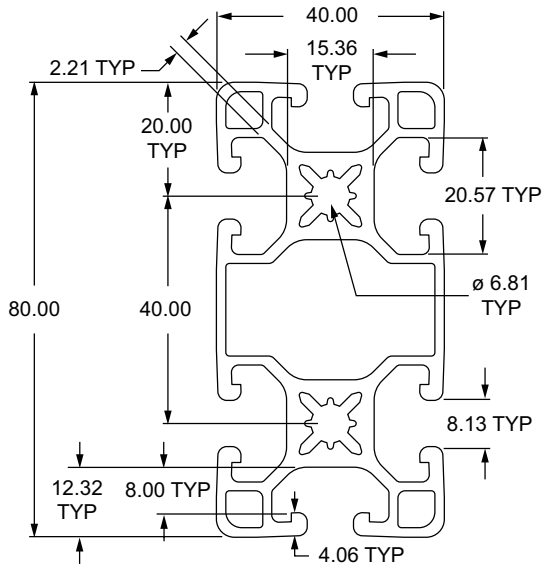

Part No.	Series	Stock Length	Material	Alloy (or comparable)	Finish	Drop Lock	Moment of Inertia	Surface Area	Yield Strength	Modulus of Elasticity	Weight
40-4080-UL	40	3 or 6.050 Meter	Aluminum	6005A – T61	Clear Anodize	2°	IX = 63.1358 cm^4	9.792 cm^2	241.1 N / mm^2	70,326.5 N / mm^2	2.6485 kg / m
40-4080-UL-Black-FB		per millimeter			Black Anodize		IY = 15.4754 cm^4				

Standard Machining Services for 40mm x 80mm

Service No.	Series	Service Description	Reference Page
40-7020	40	Cut to Length	10-2
40-7050		Access Hole	10-5
40-7044		Anchor Counterbore	10-7
40-7048		Tap Profile End	10-3

Other machining services available in Section 10

80/20 BUILD YOUR IDEA
More on 80/20® products available at 8020.net

40mm X 80mm Lite T-slotted Profile - Six Open T-slots

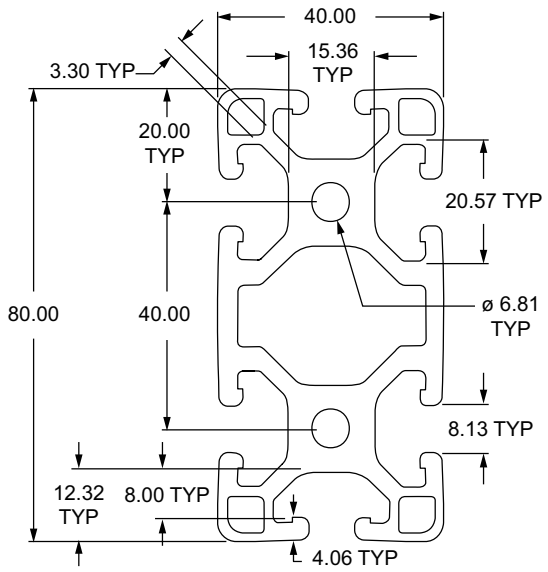

Part No.	Series	Stock Length	Material	Alloy (or comparable)	Finish	Drop Lock	Moment of Inertia	Surface Area	Yield Strength	Modulus of Elasticity	Weight
40-4080-Lite	40	3 or 6.050 Meter	Aluminum	6005A – T61	Clear Anodize	2°	IX = 71.8926 cm^4 IY = 18.7791 cm^4	12.532 cm^2	241.1 N / mm^2	70,326.5 N / mm^2	3.3876 kg / m
40-4080-Lite-Black		3 or 6.050 Meter			Black Anodize						
40-4080-Lite-Black-FB		per millimeter			Black Anodize						

Standard Machining Services for 40mm x 80mm

Service No.	Series	Service Description	Reference Page
40-7020	40	Cut to Length	10-2
40-7050		Access Hole	10-5
40-7044		Anchor Counterbore	10-7
40-7048		Tap Profile End	10-3

Other machining services available in Section 10

T-slot Profiles

40mm X 80mm T-slotted Profile - Six Open T-slots

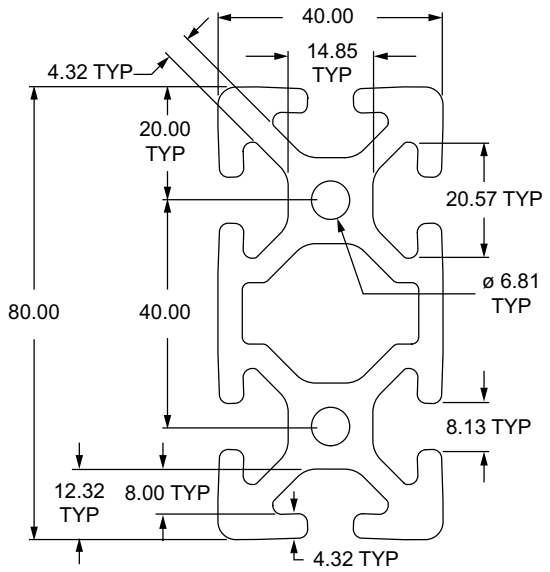

Part No.	Series	Stock Length	Material	Alloy (or comparable)	Finish	Drop Lock	Moment of Inertia	Surface Area	Yield Strength	Modulus of Elasticity	Weight
40-4080	40	3 or 6.050 Meter	Aluminum	6005A – T61	Clear Anodize	2°	IX = 97.6617 cm^4 IY = 25.2917 cm^4	15.332 cm^2	241.1 N / mm^2	70,326.5 N / mm^2	4.1464 kg / m
40-4080-Black		3 or 6.050 Meter			Black Anodize						
40-4080-Black-FB		per millimeter			Black Anodize						

Standard Machining Services for 40mm x 80mm

Service No.	Series	Service Description	Reference Page
40-7020	40	Cut to Length	10-2
40-7050		Access Hole	10-5
40-7044		Anchor Counterbore	10-7
40-7048		Tap Profile End	10-3

Other machining services available in Section 10

80/20 BUILD YOUR IDEA
More on 80/20® products available at 8020.net

40mm X 80mm Lite T-slotted Profile - Two Adjacent Open T-slots

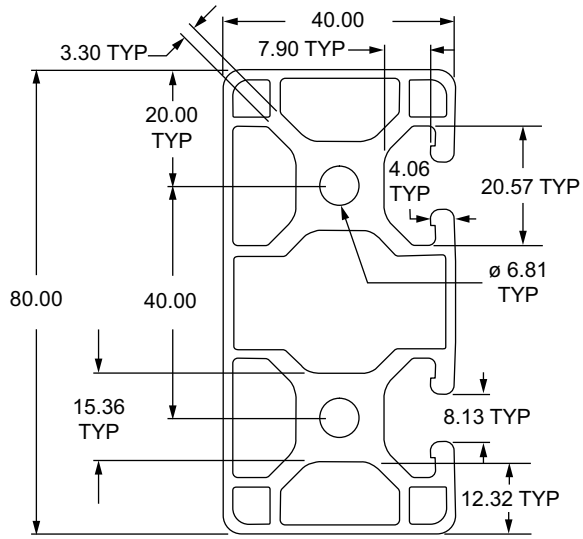

Part No.	Series	Stock Length	Material	Alloy (or comparable)	Finish	Drop Lock	Moment of Inertia	Surface Area	Yield Strength	Modulus of Elasticity	Weight
40-4082-Lite	40	3 or 6.050 Meter per millimeter	Aluminum	6005A – T61	Clear Anodize	2°	IX = 66.4788 cm^4 IY = 16.3044 cm^4	10.982 cm^2	241.1 N / mm^2	70,326.5 N / mm^2	2.9689 kg / m
40-4082-Lite-Black-FB					Black Anodize						

Standard Machining Services for 40mm x 80mm

Service No.	Series	Service Description	Reference Page
40-7020	40	Cut to Length	10-2
40-7050		Access Hole	10-5
40-7044		Anchor Counterbore	10-7
40-7048		Tap Profile End	10-3

Other machining services available in Section 10

T-slot Profiles

40mm X 80mm Lite T-slotted Profile - Three Adjacent Open T-slots

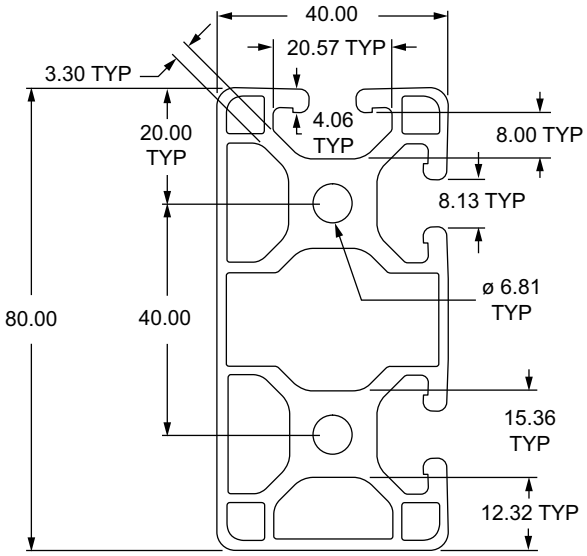

Part No.	Series	Stock Length	Material	Alloy (or comparable)	Finish	Drop Lock	Moment of Inertia	Surface Area	Yield Strength	Modulus of Elasticity	Weight
40-4083-Lite	40	3 or 6.050 Meter per millimeter	Aluminum	6005A – T61	Clear Anodize	2°	IX = 68.1908 cm^4 IY = 16.4684 cm^4	11.074 cm^2	241.1 N / mm^2	70,326.5 N / mm^2	2.9957 kg / m
40-4083-Lite-Black-FB					Black Anodize						

Standard Machining Services for 40mm x 80mm

Service No.	Series	Service Description	Reference Page
40-7020	40	Cut to Length	10-2
40-7050		Access Hole	10-5
40-7044		Anchor Counterbore	10-7
40-7048		Tap Profile End	10-3

Other machining services available in Section 10

80/20 BUILD YOUR IDEA
More on 80/20® products available at 8020.net

40mm X 80mm Lite T-slotted Profile - Four Adjacent Open T-slots

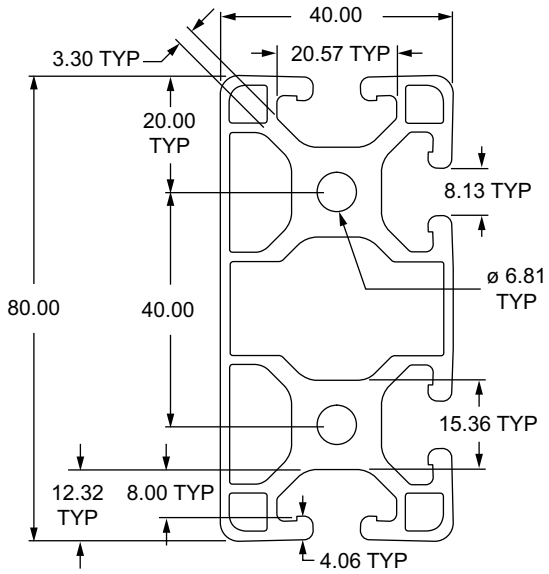

Part No.	Series	Stock Length	Material	Alloy (or comparable)	Finish	Drop Lock	Moment of Inertia	Surface Area	Yield Strength	Modulus of Elasticity	Weight
40-4084-Lite	40	3 or 6.050 Meter	Aluminum	6005A – T61	Clear Anodize	2°	IX = 69.7265 cm^4 IY = 16.6107 cm^4	11.174 cm^2	241.1 N / mm^2	70,326.5 N / mm^2	3.0208 kg / m
40-4084-Lite-Black		3 or 6.050 Meter			Black Anodize						
40-4084-Lite-Black-FB		per millimeter			Black Anodize						

Standard Machining Services for 40mm x 80mm

Service No.	Series	Service Description	Reference Page
40-7020	40	Cut to Length	10-2
40-7050		Access Hole	10-5
40-7044		Anchor Counterbore	10-7
40-7048		Tap Profile End	10-3

Other machining services available in Section 10

T-slot Profiles

40mm X 80mm Lite T-slotted Profile - Two Opposite Open T-slots

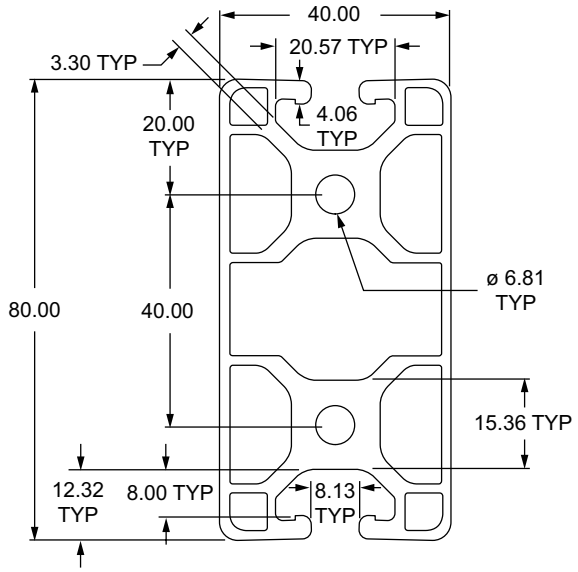

Part No.	Series	Stock Length	Material	Alloy (or comparable)	Finish	Drop Lock	Moment of Inertia	Surface Area	Yield Strength	Modulus of Elasticity	Weight
40-4085-Lite	40	3 or 6.050 Meter	Aluminum	6005A – T61	Clear Anodize	2°	IX = 67.8369 cm^4	11.000 cm^2	241.1 N / mm^2	70,326.5 N / mm^2	2.9760 kg / m
40-4085-Lite-Black-FB		per millimeter			Black Anodize		IY = 15.9404 cm^4				

Standard Machining Services for 40mm x 80mm

Service No.	Series	Service Description	Reference Page
40-7020	40	Cut to Length	10-2
40-7050		Access Hole	10-5
40-7044		Anchor Counterbore	10-7
40-7048		Tap Profile End	10-3

Other machining services available in Section 10

80/20 BUILD YOUR IDEA
More on 80/20® products available at 8020.net

40mm X 120mm T-slotted Profile - Eight Open T-slots

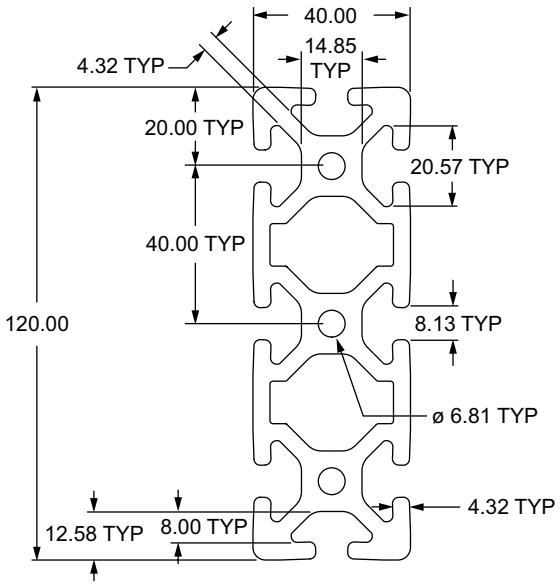

Part No.	Series	Stock Length	Material	Alloy (or comparable)	Finish	Drop Lock	Moment of Inertia	Surface Area	Yield Strength	Modulus of Elasticity	Weight
40-4012	40	3 or 6.050 Meter per millimeter	Aluminum	6005A – T61	Clear Anodize	2°	IX = 306.3198 cm^4 IY = 36.8008 cm^4	21.927 cm^2	241.1 N / mm^2	70,326.5 N / mm^2	5.9306 kg / m
40-4012-Black-FB					Black Anodize						

Standard Machining Services for 40mm x 120mm

Service No.	Series	Service Description	Reference Page
40-7021	40	Cut to Length	10-2
40-7050		Access Hole	10-5
40-7044		Anchor Counterbore	10-7
40-7028		Tap Profile End	10-3

Other machining services available in Section 10

T-slot Profiles

80mm X 80mm T-slotted Profile - Eight Open T-slots

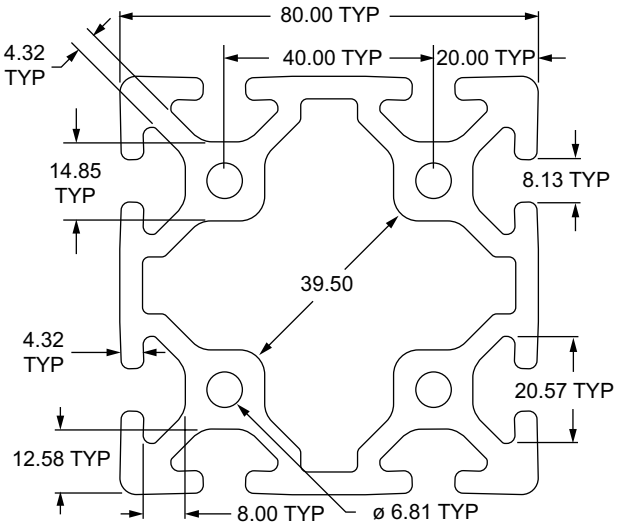

Part No.	Series	Stock Length	Material	Alloy (or comparable)	Finish	Drop Lock	Moment of Inertia	Surface Area	Yield Strength	Modulus of Elasticity	Weight
40-8080	40	3 or 6.050 Meter	Aluminum	6005A – T61	Clear Anodize	2°	IX = 171.6341 cm^4 IY = 171.6341 cm^4	23.573 cm^2	241.1 N / mm^2	70,326.5 N / mm^2	6.3762 kg / m
40-8080-Black		3 or 6.050 Meter			Black Anodize						
40-8080-Black-FB		per millimeter			Black Anodize						

Standard Machining Services for 80mm x 80mm

Service No.	Series	Service Description	Reference Page
40-7030	40	Cut to Length	10-2
40-7050		Access Hole	10-5
40-7044		Anchor Counterbore	10-7
40-7056		Tap Profile End	10-3

Other machining services available in Section 10

80/20 BUILD YOUR IDEA
More on 80/20® products available at 8020.net

80mm X 160mm T-slotted Profile - Twelve Open T-slots

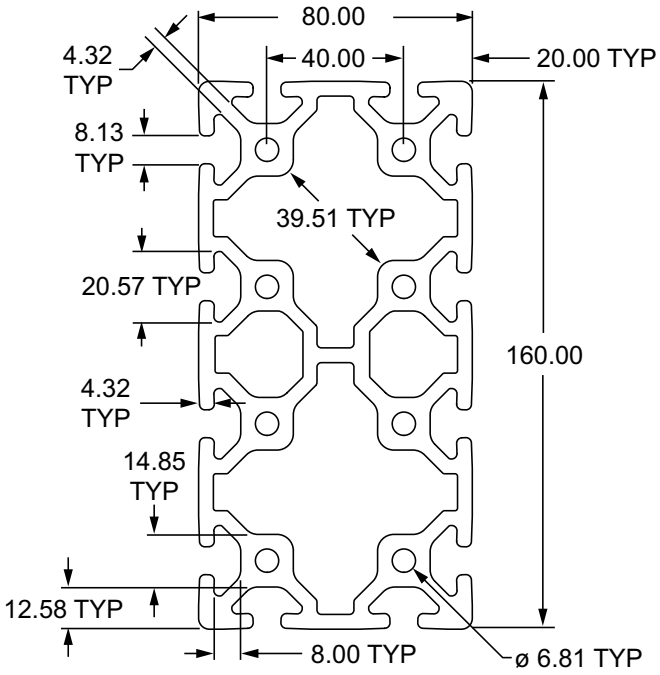

Part No.	Series	Stock Length	Material	Alloy (or comparable)	Finish	Drop Lock	Moment of Inertia	Surface Area	Yield Strength	Modulus of Elasticity	Weight
40-8016	40	3 or 6.050 Meter	Aluminum	6005A – T61	Clear Anodize	2°	IX = 1111.9793 cm^4	43.490 cm^2	241.1 N / mm^2	70,326.5 N / mm^2	11.7627 kg / m
40-8016-Black-FB		per millimeter			Black Anodize		IY = 322.7985 cm^4				

Standard Machining Services for 80mm x 160mm

Service No.	Series	Service Description	Reference Page
40-7023	40	Cut to Length	10-2
40-7050		Access Hole	10-5
40-7044		Anchor Counterbore	10-7
40-7031		Tap Profile End	10-3

Other machining services available in Section 10

T-slot Profiles

45mm X 45mm Lite T-slotted Profile - Four Open T-slots

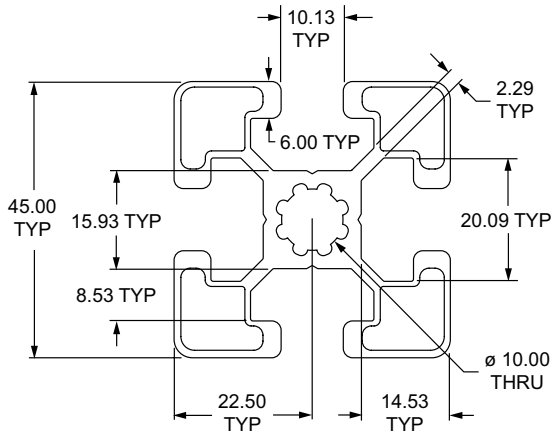

Part No.	Series	Stock Length	Material	Alloy (or comparable)	Finish	Drop Lock	Moment of Inertia	Surface Area	Yield Strength	Modulus of Elasticity	Weight
45-4545-Lite 45-4545-Lite-Black-FB	45	3 or 6.050 Meter per millimeter	Aluminum	6005A – T61	Clear Anodize Black Anodize	None	IX = 9.2029 cm^4 IY = 9.2029 cm^4	5.167 cm^2	241.1 N / mm^2	70,326.5 N / mm^2	1.3976 kg / m

45mm X 45mm T-slotted Profile - Four Open T-slots

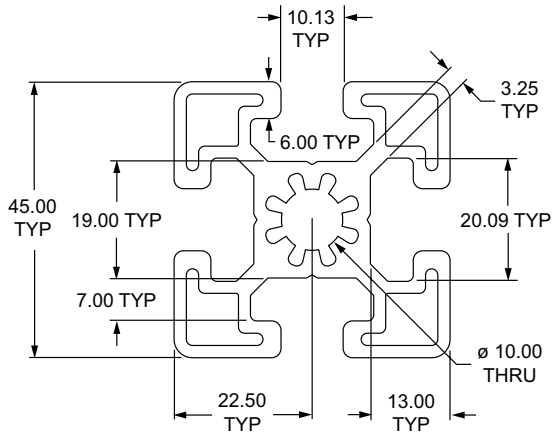

Part No.	Series	Stock Length	Material	Alloy (or comparable)	Finish	Drop Lock	Moment of Inertia	Surface Area	Yield Strength	Modulus of Elasticity	Weight
45-4545 45-4545-Black-FB	45	3 or 6.050 Meter per millimeter	Aluminum	6005A – T61	Clear Anodize Black Anodize	None	IX = 13.9604 cm^4 IY = 13.9604 cm^4	7.587 cm^2	241.1 N / mm^2	70,326.5 N / mm^2	2.0455 kg / m

Standard Machining Services for 45mm x 45mm

Service No.	Series	Service Description	Reference Page
45-7010	45	Cut to Length	10-2
45-7248		Access Hole	10-5
45-7053		Tap Profile End	10-3
45-7037		Bolt Connector	10-22
45-7058		Central Connector	10-20

Other machining services available in Section 10

80/20 BUILD YOUR IDEA
More on 80/20® products available at 8020.net

45mm X 90mm T-slotted Profile - Six Open T-slots

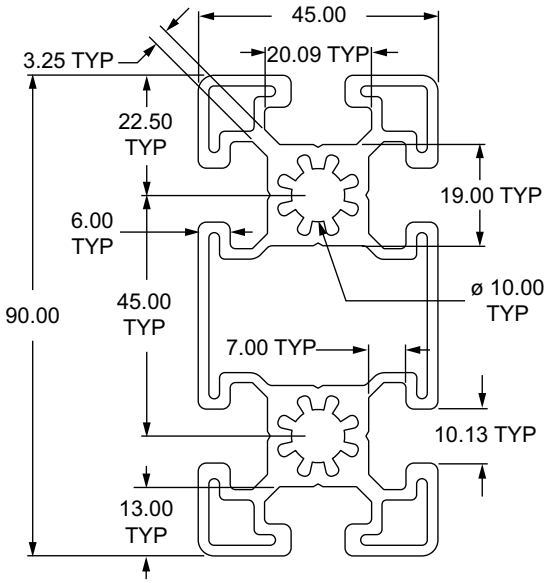

Part No.	Series	Stock Length	Material	Alloy (or comparable)	Finish	Drop Lock	Moment of Inertia	Surface Area	Yield Strength	Modulus of Elasticity	Weight
45-4590	45	3 or 6.050 Meter	Aluminum	6005A – T61	Clear Anodize	None	IX = 104.2072 cm^4	12.615 cm^2	241.1 N / mm^2	70,326.5 N / mm^2	3.4109 kg / m
45-4590-Black-FB		per millimeter			Black Anodize		IY = 25.2637 cm^4				

Standard Machining Services for 45mm x 90mm

Service No.	Series	Service Description	Reference Page
45-7020	45	Cut to Length	10-2
45-7248		Access Hole	10-5
45-7032		Tap Profile End	10-3
45-7037		Bolt Connector	10-22

Other machining services available in Section 10

T-slot Profiles

90mm X 90mm T-slotted Profile - Eight Open T-slots

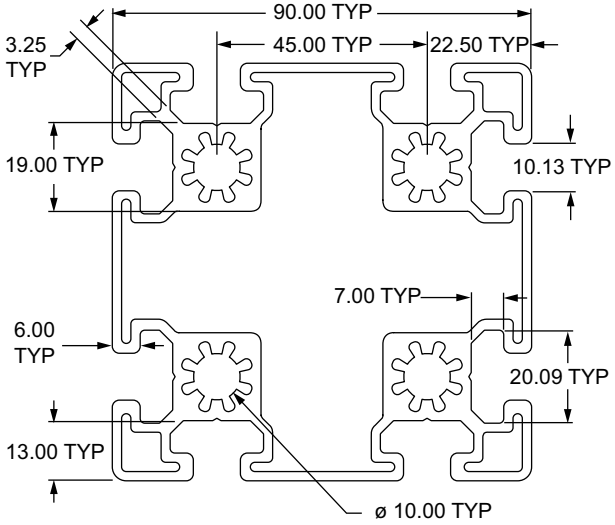

Part No.	Series	Stock Length	Material	Alloy (or comparable)	Finish	Drop Lock	Moment of Inertia	Surface Area	Yield Strength	Modulus of Elasticity	Weight
45-9090	45	3 or 6.050 Meter	Aluminum	6005A – T61	Clear Anodize	None	IX = 178.4968 cm^4	20.014 cm^2	241.1	70,326.5	5.4116 kg / m
45-9090-Black-FB		per millimeter			Black Anodize		IY = 179.4968 cm^4		N / mm^2	N / mm^2	

Standard Machining Services for 90mm x 90mm

Service No.	Series	Service Description	Reference Page
45-7030	45	Cut to Length	10-2
45-7036		Tap Profile End	10-3
45-7037		Bolt Connector	10-22

Other machining services available in Section 10

80/20 BUILD YOUR IDEA
More on 80/20® products available at 8020.net

1.50" X 1.50" Square Tube Profile - No Pre-Drilled Holes

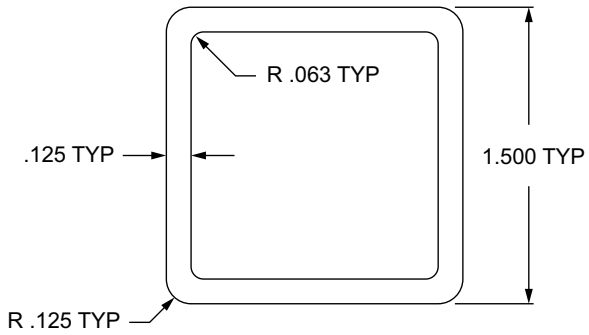

Part No.	Series	Stock Length	Material	Alloy (or comparable)	Finish	Moment of Inertia	Surface Area	Yield Strength	Modulus of Elasticity	Weight
9700	RT	150"	Aluminum	6005A – T61	Clear Anodize	IX = 0.2127"⁴	0.6775 in.²	35,000 psi	10,200,000 lb / in.²	0.0660 lb / in.
9700-Black-FB		per inch			Black Anodize	IY = 0.2127"⁴				

1.50" X 1.50" Square Tube Profile - With Pre-Drilled Holes

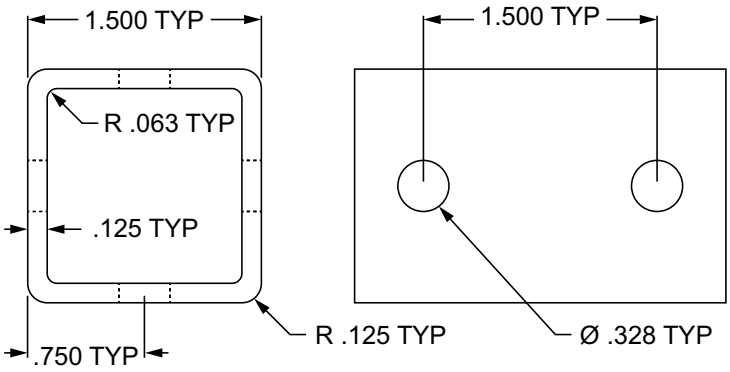

Part No.	Series	Stock Length	Material	Alloy (or comparable)	Finish	Moment of Inertia	Surface Area	Yield Strength	Modulus of Elasticity	Weight
9701	RT	150"	Aluminum	6005A – T61	Clear Anodize	—	0.6775 in.²	35,000 psi	10,200,000 lb / in.²	0.0660 lb / in.
9701-Black-FB		per inch			Black Anodize					

Standard Machining Services for 1.50" x 1.50"

Service No.	Series	Service Description	Reference Page
7010	RT	Cut to Length	10-2
7246		Access Hole	10-5

Ready Tube® Profiles

1.50" X 1.50" P-Tube Profile - No Pre-Drilled Holes - Single 1.50" Flange on One Side

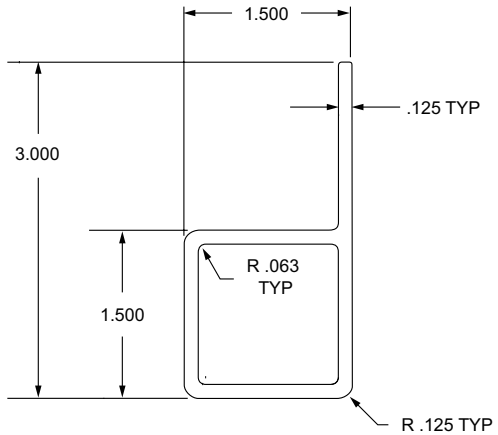

Part No.	Series	Stock Length	Material	Alloy (or comparable)	Finish	Moment of Inertia	Surface Area	Yield Strength	Modulus of Elasticity	Weight
9705	RT	150"	Aluminum	6005A – T61	Clear Anodize	—	0.8691 in.²	35,000 psi	10,200,000 lb / in.²	0.1033 lb / in.
9705-Black-FB		per inch			Black Anodize					

1.50" X 1.50" P-Tube Profile - Pre-Drilled Holes - Single 1.50" Flange on One Side

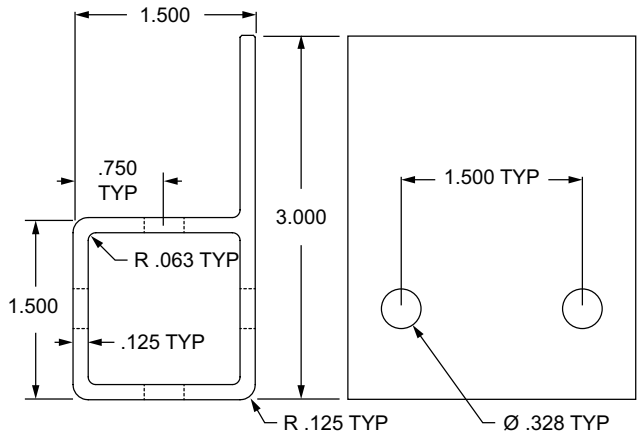

Part No.	Series	Stock Length	Material	Alloy (or comparable)	Finish	Moment of Inertia	Surface Area	Yield Strength	Modulus of Elasticity	Weight
9706	RT	150"	Aluminum	6005A – T61	Clear Anodize	—	0.8691 in.²	35,000 psi	10,200,000 lb / in.²	0.0848 lb / in.
9706-Black-FB		per inch			Black Anodize					

Standard Machining Services for 1.50" x 1.50" with Flange

Service No.	Series	Service Description	Reference Page
7020	RT	Cut to Length	10-2
7246		Access Hole	10-5

80/20 BUILD YOUR IDEA
More on 80/20® products available at 8020.net

1.50" X 1.50" A-Tube Profile - No Pre-Drilled Holes - Double 1.50" Flange on One Side

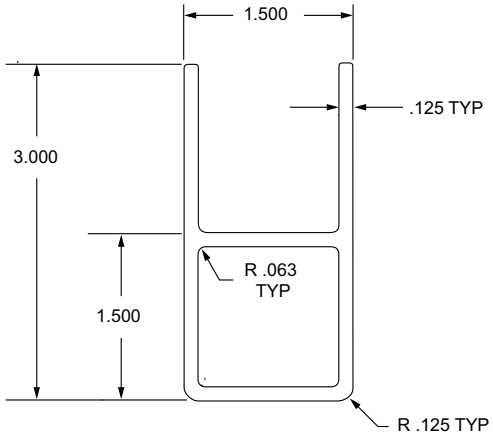

Part No.	Series	Stock Length	Material	Alloy (or comparable)	Finish	Moment of Inertia	Surface Area	Yield Strength	Modulus of Elasticity	Weight
9725	RT	150"	Aluminum	6005A – T61	Clear Anodize	—	1.061 in.²	35,000 psi	10,200,000 lb / in.²	0.1033 lb / in.
9725-Black-FB		per inch			Black Anodize					

1.50" X 1.50" A-Tube Profile - Pre-Drilled Holes - Double 1.50" Flange on One Side

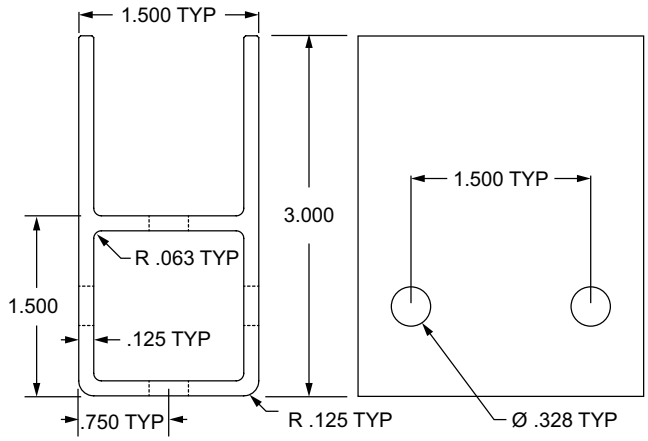

Part No.	Series	Stock Length	Material	Alloy (or comparable)	Finish	Moment of Inertia	Surface Area	Yield Strength	Modulus of Elasticity	Weight
9726	RT	150"	Aluminum	6005A – T61	Clear Anodize	—	1.061 in.²	35,000 psi	10,200,000 lb / in.²	0.1033 lb / in.
9726-Black-FB		per inch			Black Anodize					

Standard Machining Services for 1.50" x 1.50"

Service No.	Series	Service Description	Reference Page
7020	RT	Cut to Length	10-2
7246		Access Hole	10-5

Ready Tube® Profiles

1.50" X 1.50" A-Tube Profile - Pre-Drilled Holes - Notches - Double 1.50" Flange on One Side

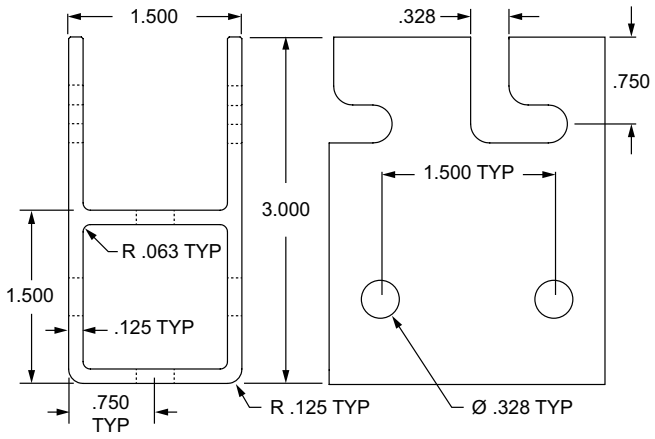

Part No.	Series	Stock Length	Material	Alloy (or comparable)	Finish	Moment of Inertia	Surface Area	Yield Strength	Modulus of Elasticity	Weight
9728	RT	150"	Aluminum	6005A – T61	Clear Anodize	—	1.061 in.²	35,000 psi	10,200,000 lb / in.²	0.1033 lb / in.
9728-Black-FB		per inch			Black Anodize					

Standard Machining Services for 1.50" x 1.50" with Flange

Service No.	Series	Service Description	Reference Page
7020	RT	Cut to Length	10-2
7246		Access Hole	10-5

80/20 BUILD YOUR IDEA
More on 80/20® products available at 8020.net

1.00" X 1.00" Square Tube Profile

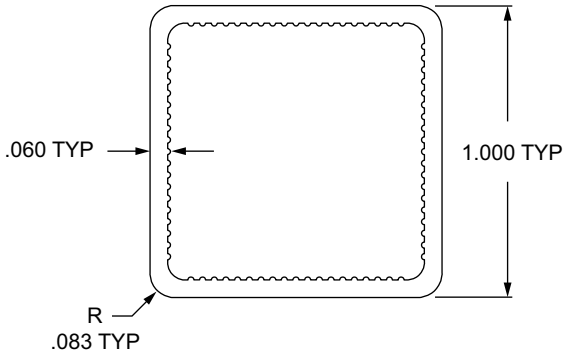

Part No.	Series	Stock Length	Material	Alloy (or comparable)	Finish	Moment of Inertia	Surface Area	Yield Strength	Modulus of Elasticity	Weight
9000	QF	145"	Aluminum	6005A – T61	Clear Anodize	—	.2228 in.^{2}	35,000 psi	10,200,000 lb / in.^{2}	0.0231 lb / in.
9000-Black-FB		per inch			Black Anodize					

1.00" X 1.00" Tube Profile - Single 0.5" Flange on One Side

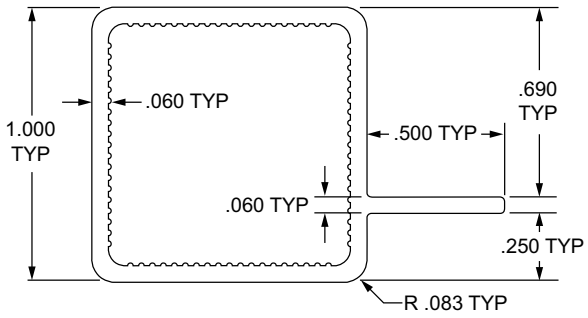

Part No.	Series	Stock Length	Material	Alloy (or comparable)	Finish	Moment of Inertia	Surface Area	Yield Strength	Modulus of Elasticity	Weight
9005	QF	145"	Aluminum	6005A – T61	Clear Anodize	—	.2528 in.^{2}	35,000 psi	10,200,000 lb / in.^{2}	0.0261 lb / in.
9005-Black-FB		per inch			Black Anodize					

Standard Machining Services for 1.00" x 1.00"

Service No.	Series	Service Description	Reference Page
7310	QF	Cut to Length	10-2
7300		45° Flange Milling (9005 only)	10-25

Quick Frame® Profiles

1.00" X 1.00" Tube Profile - Single 0.5" Flanges on Adjacent Sides

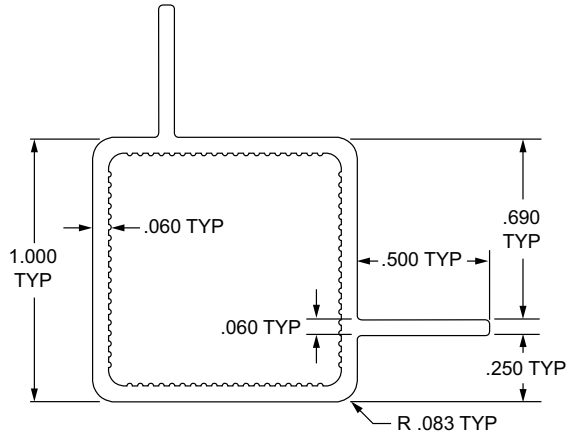

Part No.	Series	Stock Length	Material	Alloy (or comparable)	Finish	Moment of Inertia	Surface Area	Yield Strength	Modulus of Elasticity	Weight
9010	QF	145"	Aluminum	6005A – T61	Clear Anodize	—	.2828 in.^{2}	35,000 psi	10,200,000 lb / in.^{2}	0.0291 lb / in.
9010-Black-FB		per inch			Black Anodize					

1.00" X 1.00" Tube Profile - Single 0.5" Flanges on Opposite Sides

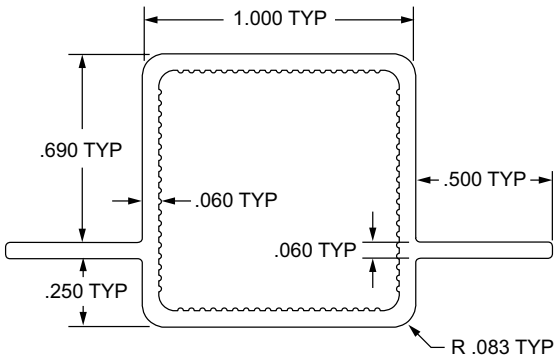

Part No.	Series	Stock Length	Material	Alloy (or comparable)	Finish	Moment of Inertia	Surface Area	Yield Strength	Modulus of Elasticity	Weight
9015	QF	145"	Aluminum	6005A – T61	Clear Anodize	—	.2828 in.^{2}	35,000 psi	10,200,000 lb / in.^{2}	0.0291 lb / in.
9015-Black-FB		per inch			Black Anodize					

Standard Machining Services for 1.00" x 1.00"

Service No.	Series	Service Description	Reference Page
7310		Cut to Length	10-2
7301	QF	45° Flange Milling (9010 only)	10-25
7302		45° Flange Milling (9015 only)	10-25

80/20 BUILD YOUR IDEA
More on 80/20® products available at 8020.net

1.00" X 1.00" Tube Profile - Double 0.5" Flanges on One SideSide

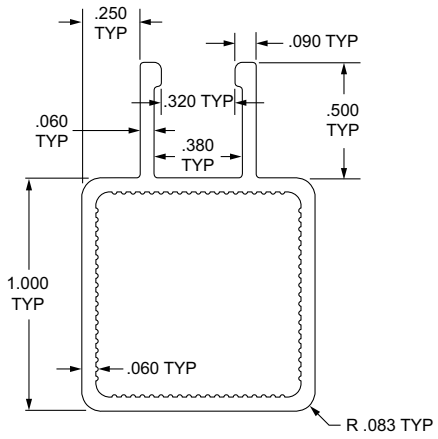

Part No.	Series	Stock Length	Material	Alloy (or comparable)	Finish	Moment of Inertia	Surface Area	Yield Strength	Modulus of Elasticity	Weight
9025	QF	145"	Aluminum	6005A – T61	Clear Anodize	—	.2889 in.^{2}	35,000 psi	10,200,000 lb / in.^{2}	0.0296 lb / in.
9025-Black-FB		per inch			Black Anodize					

1.00" X 1.00" Tube Profile - Double 0.5" Flanges on Adjacent Sides

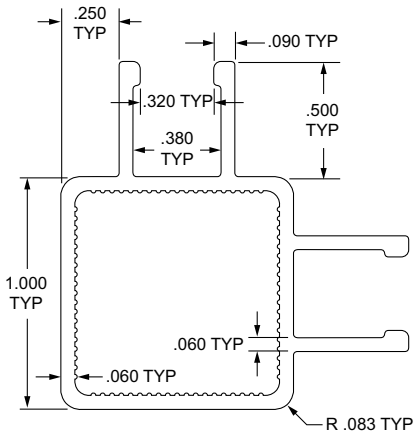

Part No.	Series	Stock Length	Material	Alloy (or comparable)	Finish	Moment of Inertia	Surface Area	Yield Strength	Modulus of Elasticity	Weight
9030	QF	145"	Aluminum	6005A – T61	Clear Anodize	—	.3550 in.^{2}	35,000 psi	10,200,000 lb / in.^{2}	0.0362 lb / in.
9030-Black-FB		per inch			Black Anodize					

Standard Machining Services for 1.00" x 1.00"

Service No.	Series	Service Description	Reference Page
7310		Cut to Length	10-2
7300	QF	45° Flange Milling (9025 only)	10-25
7301		45° Flange Milling (9030 only)	10-25

Quick Frame® Profiles

1.00" X 1.00" Tube Profile - Double 0.5" Flanges on Opposite Sides

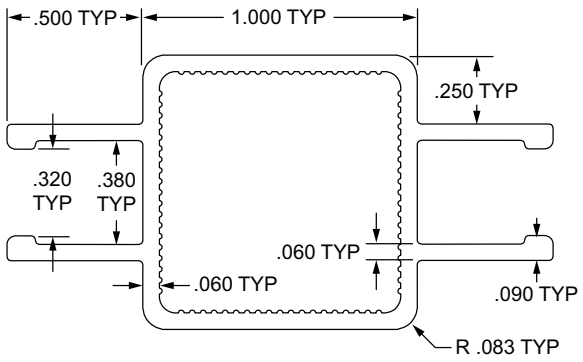

Part No.	Series	Stock Length	Material	Alloy (or comparable)	Finish	Moment of Inertia	Surface Area	Yield Strength	Modulus of Elasticity	Weight
9035	QF	145"	Aluminum	6005A – T61	Clear Anodize	—	.3550 in.^{2}	35,000 psi	10,200,000 lb / in.^{2}	0.0362 lb / in.
9035-Black-FB		per inch			Black Anodize					

Standard Machining Services for 1.00" x 1.00"

Service No.	Series	Service Description	Reference Page
7310	QF	Cut to Length	10-2
7302		45° Flange Milling (9035 only)	10-25

80/20 BUILD YOUR IDEA
More on 80/20® products available at 8020.net

Introduction to Fastening Methods

Page 3-6

Fastening Method Types
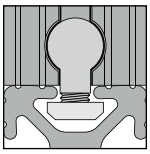
Page 3-6

Fastener Features Chart

Page 3-7

T-Nut Types

Page 3-8

Hardware Options

Page 3-9

Ready Tube Connectors

Page 3-10

Quick Frame Connectors

Page 3-11

Internal Fasteners

Standard Anchor Fastener

Page 3-12

Standard Anchor Fastener (Cam Only)

Page 3-13

Short Double Anchor Fastener

Page 3-14

Long Double Anchor Fastener

Page 3-14

Butt Fastener

Page 3-15

Standard End Fastener

Page 3-16

Single Tab End Fastener

Page 3-17

Double End Fastener

Page 3-18

Hidden Corner Connector

Page 3-19

Miter Connector

Page 3-20

90 Degree Inside Corner Connector

Page 3-21

Central Connector

Page 3-22

Bolt Connector

Page 3-23

Milling Connector

Page 3-24

External Fasteners

Plate Connector

Page 3-25

2 Hole Straight Flat Plate

Page 3-26

3 Hole Straight Flat Plate

Page 3-27

4 Hole Straight Flat Plate

Page 3-28

4 Hole Square Flat Plate

Page 3-29

6 Hole Rectangular Flat Plate

Page 3-30

8 Hole Rectangular Flat Plate

Page 3-31

2 Hole Straight Transition Plate

Page 3-32

2 Hole Straight Transition Plate with Flush Offset

Page 3-33

2 Hole Slotted Transition Plate with Flush Offset

Page 3-34

3 Hole Straight Transition Plate Small Series Primary

Page 3-35

3 Hole Straight Transition Plate Large Series Primary

Page 3-36

4 Hole Straight Transition Plates

Page 3-37

4 Hole Rectangular Transition Plates

Page 3-38

4 Hole Rectangular Transition Plates with Flush Offset

Page 3-39

4 Hole Rectangular Slotted Transition Plates w/ Flush Offset

Page 3-40

6 Hole Rectangular Transition Plates Small Series Primary

Page 3-41

6 Hole Rectangular Transition Plates Large Series Primary

Page 3-42

8 Hole Rectangular Transition Plates

Page 3-43

4 Hole 90 Degree Angled Flat Plates

Page 3-44

5 Hole 90 Degree Angled Flat Plates

Page 3-45

6 Hole 90 Degree Angled Stacked Flat Plates

Page 3-46

6 Hole 90 Degree Angled Squared Flat Plates

Page 3-47

7 Hole 90 Degree Angled Squared Flat Plates

Page 3-48

Fasteners

7 Hole 90 Degree Angled Stacked Flat Plates

Page 3-49

9 Hole 90 Degree Angled Flat Plates

Page 3-50

10 Hole 90 Degree Angled Flat Plates

Page 3-51

12 Hole 90 Degree Angled Flat Plates

Page 3-52

4 Hole 15 Degree Angled Flat Plates

Page 3-53

6 Hole 15 Degree Angled Flat Plates

Page 3-54

4 Hole 30 Degree Angeled Flat Plates

Page 3-55

6 Hole 30 Degree Angled Flat Plates

Page 3-56

4 Hole 45 Degree Angled Flat Plates

Page 3-57

6 Hole 45 Degree Angled Flat Plates

Page 3-58

4 Hole 60 Degree Angled Flat Plates

Page 3-59

6 Hole 60 Degree Angled Flat Plates

Page 3-60

4 Hole Tee Flat Plate

Page 3-61

5 Hole Tee Flat Plate

Page 3-62

6 Hole Tee Flat Plate

Page 3-63

7 Hole Tee Flat Plate

Page 3-64

8 Hole Tee Flat Plate

Page 3-65

11 Hole Tee Flat Plate

Page 3-66

12 Hole Tee Flat Plate

Page 3-67

16 Hole Tee Flat Plate

Page 3-68

7 Hole Cross Flat Plate

Page 3-69

12 Hole Cross Flat Plate

Page 3-70

16 Hole Cross Flat Plate

Page 3-71

20 Hole Cross Flat Plate

Page 3-72

5 Hole "L" Flat Plate

Page 3-73

5 Hole "T" Flat Plate

Page 3-74

2 Hole Lite Inside Corner Bracket

Page 3-75

2 Hole Inside Corner Bracket

Page 3-76

2 Hole Slotted Inside Corner Bracket

Page 3-77

2 Hole Inside Corner Bracket with Single Support

Page 3-78

2 Hole 18mm Slotted Bracket with Dual Support

Page 3-79

2 Hole 20mm Slotted Bracket with Dual Support

Page 3-80

2 Hole 27mm Slotted Bracket with Dual Supoort

Page 3-81

2 Hole 28mm Slotted Bracket with Dual Support

Page 3-82

2 Hole 39mm Slotted Bracket with Dual Support
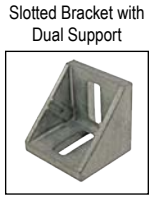
Page 3-83

2 Hole 42mm Slotted Bracket with Dual Support

Page 3-84

3 Hole Inside Corner Bracket

Page 3-85

3 Hole Slotted Inside Corner Bracket

Page 3-86

4 Hole Wide Inside Corner Bracket

Page 3-87

4 Hole Tall Inside Corner Bracket

Page 3-88

4 Hole Inside Corner Bracket with Single Support

Page 3-89

4 Hole Inside Corner Bracket with Dual Support

Page 3-90

4 Hole Tall Lite Inside Corner Bracket

Page 3-91

4 Hole Wide Slotted Inside Corner Bracket

Page 3-92

6 Hole Tall Inside Corner Bracket

Page 3-93

6 Hole Wide 2x4 Corner Bracket

Page 3-94

6 Hole Wide 2x4 Slotted Bracket

Page 3-95

6 Hole Wide 3x3 Corner Bracket

Page 3-96

6 Hole Center Corner Bracket

Page 3-97

6 Hole Left Aligned Corner Bracket

Page 3-98

6 Hole Right Aligned Corner Bracket

Page 3-99

6 Hole Wide Slotted Inside Corner Bracket

Page 3-100

8 Hole Inside Corner Bracket

Page 3-101

8 Hole 57mm Bracket with Dual Support

Page 3-102

8 Hole 76mm Bracket with Dual Support

Page 3-103

8 Hole 86mm Bracket with Dual Support

Page 3-104

9 Hole Wide Slotted Inside Corner Bracket

Page 3-105

10 Hole Inside Corner Bracket

Page 3-106

12 Hole Tall Inside Corner Bracket

Page 3-107

12 Hole Wide Inside Corner Bracket

Page 3-108

18 Hole Inside Corner Bracket

Page 3-109

2 Hole Lite Transition Inside Corner Bracket

Page 3-110

2 Hole Transition Inside Corner Bracket

Page 3-111

4 Hole Tall Transition Inside Corner Bracket

Page 3-112

4 Hole Lite Wide Transition Inside Corner Bracket

Page 3-113

4 Hole Wide Transition Inside Corner Bracket

Page 3-114

8 Hole Center Transition Inside Corner Bracket

Page 3-115

2 Hole Gusseted Inside Corner Bracket
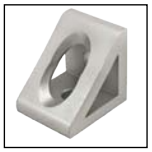
Page 3-116

4 Hole Tall Gusseted Inside Corner Bracket

Page 3-117

4 Hole Wide Gusseted Inside Corner Bracket

Page 3-118

8 Hole Gusseted Inside Corner Bracket

Page 3-119

3 Way Triangular Corner Bracket

Page 3-120

3 Way Rounded Corner Bracket

Page 3-121

2 Way Light Squared Corner Connector

Page 3-122

3 Way Light Squared Corner Connector

Page 3-123

3 Way Squared Corner Connector

Page 3-124

3 Way Rounded Corner Connector

Page 3-125

3 Way Triangular Corner Connector

Page 3-126

Standard Angle Clamp Block

Page 3-127

2 Hole Pivot Joint

Page 3-128

Economy Angle Clamp Block

Page 3-130

3 Hole Recessed Straight Pivot Plate

Page 3-131

3 Hole Triangular Pivot Plate

Page 3-132

3 Hole Recessed Triangular Pivot Plate

Page 3-133

5 Hole Triangular Pivot Plate

Page 3-134

5 Hole Recessed Triangular Pivot Plate

Page 3-135

0 Degree Structural Pivot Nub

Page 3-136

90 Degree Structural Pivot Nub

Page 3-137

Universal Structural Pivot Nub

Page 3-138

0 Degree Structural Right Angle Pivot Nub

Page 3-139

90 Degree Structural Right Angle Pivot Nub

Page 3-140

Universal Structural Right Angle Pivot Nub

Page 3-141

"L" Structural Pivot Arm

Page 3-142

Standard Straight Structural Pivot Arm

Page 3-143

Extended Straight Structural Pivot Arm

Page 3-143

Standard Structural Pivot Assembly with Dual Straight Arms

Page 3-144

Standard Structural Pivot Assembly with Dual "L" Arms

Page 3-146

Standard Structural Pivot Assembly with Straight and "L" Arm

Page 3-148

Right Angle Structural Pivot Assembly with Dual Straight Arms

Page 3-150

Right Angle Structural Pivot Assembly with Dual "L" Arms

Page 3-152

Fasteners

Hardware

Slide-in Economy T-Nut Center Thread

Page 3-154

Slide-in Economy T-Nut Offset Thread

Page 3-155

Double Slide-in Economy T-Nut

Page 3-156

Triple Slide-in Economy T-Nut / Holding Spring

Page 3-157

Standard Slide-in T-Nut

Page 3-158

Self-Aligning Slide-in T-Nut with Ball Spring

Page 3-160

Slide-in T-Nut with Ball Spring

Page 3-161

Self-Aligning Slide-in T-Nut

Page 3-162

Slide-in Economy T-Nut Block

Page 3-163

Roll-in T-Nut with Flex Handle

Page 3-164

Roll-in T-Nut with Set Screw

Page 3-165

Roll-in T-Nut with Ball Spring

Page 3-166

Self-Aligning Roll-in T-Nut with Ball Spring

Page 3-167

Self-Aligning Roll-in T-Nut

Page 3-168

Tall Self-Aligning Roll-in T-Nut with Spring Leaf

Page 3-169

Short Self-Aligning Roll-in T-Nut with Spring Leaf

Page 3-170

Economy Drop-in T-Nut

Page 3-171

Standard Drop-in T-Nut

Page 3-172

Slide-in T-Nut with Holding Spring

Page 3-174

Double Anchor Slide-in T-Nut

Page 3-175

Nylon T-Slot Nut

Page 3-176

Button Head Socket Cap Screw

Page 3-177

Flanged Button Head Socket Cap Screw

Page 3-179

Flat Head Socket Cap Screw

Page 3-180

Socket Head Cap Screw

Page 3-181

Low Head Socket Cap Screw

Page 3-184

Connecting Screw

Page 3-184

Flanged Hex Head Bolt

Page 3-185

Self Tapping Screw

Page 3-185

Self Drilling Screw

Page 3-185

Threaded Insert

Page 3-186

Bearing Pad Screw

Page 3-186

Shoulder Bolt

Page 3-187

Shoulder Bolt Assembly

Page 3-187

Washer

Page 3-188

Hex Nut

Page 3-189

Flanged Hex Head Nut

Page 3-190

Slide-in Flanged Economy T-Slot Stud

Page 3-191

Slide-in Economy T-Slot Stud

Page 3-191

Drop-in T-Slot Stud Assembly

Page 3-192

Drop-in T-Slot Stud

Page 3-193

Drop-in T-Slot Stud with Flanged Hex Nut

Page 3-193

Bolt Assemblies

Page 3-194

Ready Tube® Fasteners

Standard Tube Insert

Page 3-205

Extended Tube Insert

Page 3-206

Standard Tube Insert Kit with Hex Nut

Page 3-207

Standard Tube Insert Kit with Roll Pin

Page 3-208

Roll Pin

Page 3-208

Anti-Rotation Plate

Page 3-209

Quick Frame® Fasteners

2 Way Butt Connector

Page 3-210

2 Way Corner Connector

Page 3-210

90 Degree Straight Base Connector

Page 3-211

90 Degree Corner Base Connector

Page 3-211

3 Way Tee Connector

Page 3-212

3 Way Corner Connector

Page 3-212

4 Way Cross Connector

Page 3-213

4 Way Corner Connector

Page 3-213

5 Way Junction Connector

Page 3-214

6 Way Junction Connector

Page 3-214

Caster or Spacer Receptacle Insert

Page 3-215

2 Way Spacer

Page 3-215

3 Way Connector with Caster or Spacer Receptacle

Page 3-216

3 Way Hexagon Segment Connector

Page 3-217

60 Degree Hexagon Side and Top Connector

Page 3-217

30 Degree Hexagon Straight Base Connector

Page 3-218

Quick Frame to 10 Series Transition Tee

Page 3-218

Fasteners

Introduction to Fastening Methods

There are several options when choosing your fastening method. The intent of this section is to give an overview of points to consider as well as a brief summary of fastening options. While the variety may seem overwhelming, you can narrow down your selection based on properties of your desired fastener.

Keep in mind that in most instances, there is no “one right way” or “one right answer” when choosing your method. It will depend on personal preference, circumstance, application, design and purpose.

Fastening Method Types

As a way to simplify your decision-making process, it’s easiest to categorize fasteners into two main groups; internal fasteners and external fasteners. Most of the fastening connections offered by 80/20 fall into one of these two groups and each group has unique attributes and properties.

Internal

Internal connections create strong bonds between profiles because in most cases the fastener is machined into the profile. They are easy to assemble, require few parts and are simple to work into your design.

- Fastener recessed in T-slot
- Fewer parts
- Easy to assemble
- Easy to incorporate
- Hardware typically included
- Hidden connections available
- Options for infinite positioning
- Typically will not affect overall size

External

External connections mount to the outside of the T-slot, strengthen connection points, and are easy to implement into the application. Most external connections are reconfigurable and can be mounted anywhere along the T-slot.

- Mount to T-slot
- Usually no machining required
- Options for infinite positioning
- Easy to implement
- Reconfigurable connections
- Ability for variable angles
- Reinforce connection points
- Assemble with simple hardware
- Options for connecting more than two profiles

80/20 BUILD YOUR IDEA
More on 80/20® products available at 8020.net

Fastener Features Chart

Part	Part Image	No Machining	Hardware Included	Reconfigurable	Flush	More Than 2-Way Hub	Hidden	Infinite Positioning
Internal								
Anchor Fastener			✔	✔	✔			✔
End Fastener			✔		✔	✔	✔	
Inside Corner Connector		✔	✔					✔
Hidden Corner Connector		✔	✔		✔		✔	✔
Butt Fastener			✔		✔			
Miter Connector			✔		✔			
External								
Flat Plates		✔		✔				✔
Brackets and Gussets		✔		✔		✔		✔
3-Way Corner Connectors					✔	✔		
45 Degree Supports		✔	✔		✔			
Pivot Hinge Assemblies		✔		✔				✔

Fasteners

T-Nut Types

80/20 offers a wide variety of hardware with options in size, material, shape, thread alignment, and installation method. Three popular types of T-nuts are slide-in, drop-in, and roll-in.

Drop-In T-Nut

Drop-in T-nuts load from anywhere on the profile, making them perfect in instances where the ends of the profiles are captivated and you want to add to your application without dismantling the frame.

Roll-In T-Nut

Roll-in T-nuts load from their side and spin into place, which allows for infinite positioning along the T-slot. They can be used even when profiles are captivated. Roll-in T-nuts come in several variations, including self-aligning and features to hold the T-nut in place for easy positioning.

Slide-In T-Nut

Slide-in T-nuts load from the end of the profile and are available in several configurations including a centered or offset thread, and material and finish options.

Hardware Options

80/20 offers a wide variety of bolt fastening options. Some of the most frequently used are Button Head, Socket Head, Flanged Button Head, Flat Head and Low Head.

Button Head (BHSCS)

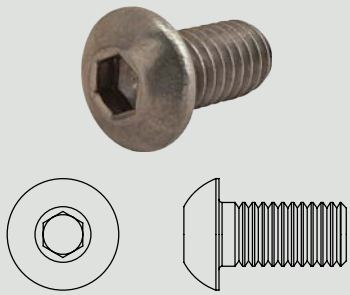

Socket Head (SHCS)

Flanged Button Head (FBHSCS)

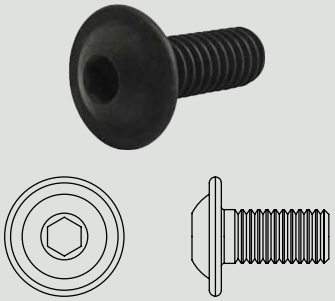

Flat Head (FHSCS)

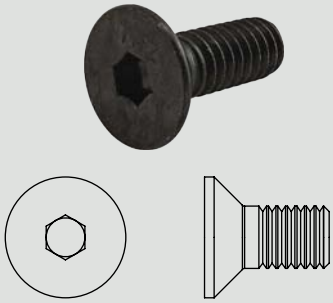

Low Head (LHSCS)

What's it made of?
Possible hardware materials include: Black Zinc, Bright Zinc, Blue Zinc and Stainless Steel.

Fasteners

RT Ready Tube® Fasteners 101

80/20 offers several fastening options for Ready Tube profiles. While the most common is the Ready Connector Kit, there are also additional internal and external connection methods. Because Ready Tube profiles have pre-drilled holes, the connection methods do not require machining.

Only need a wrench!

Ready Tube Step-by-Step Assembly

Standard Insert Kit

The Standard Tube Insert Kit includes all of the hardware you will need to easily assemble your project. This method is used for 90 degree connections when the end of the mounting profile is exactly .750” of an inch from the first hole centerline.

Extended Insert Kit

The Extended Tube Insert Kit also includes all of the hardware you will need to easily assemble your project. This kit is used in instances when the end of the mounting profile is not exactly .750” of an inch from the first hole centerline.

Roll Pin

The roll pin is commonly used with the standard tube insert and is an internal connection method for Ready Tube. It provides a smooth, clean finish and eliminates the need for protruding hardware when used with Ready Tube connector kits.

Compatible with Additional 15 Series Fasteners

80/20 corner brackets, gussets, and flat plates can also be used to make connections between Ready Tube profiles. All of these connection methods are external, meaning that they are easy to use, reconfigurable, and mount directly to the profile.

Quick Frame® Fasteners 101

80/20 Quick Frame connectors are made of black or gray nylon and used with a Quick Frame Profile which has built-in ridges that bite into the fastener to create tension without the use of additional hardware. The profiles connect quickly and easily using only a soft-faced mallet to form light-duty yet sturdy builds.

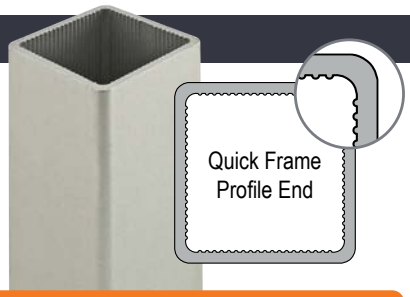

Quick Frame Step-by-Step Assembly

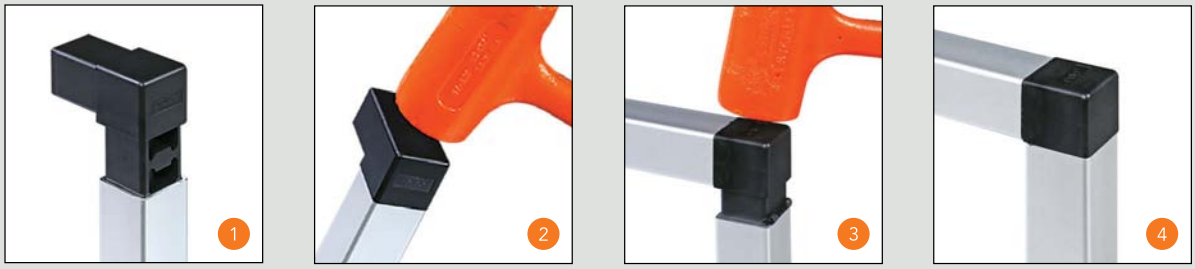

No Machining, No Additional Hardware

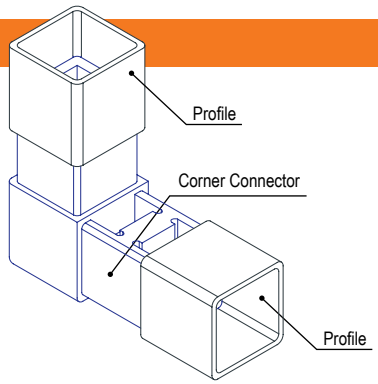

80/20 Quick Frame connectors require no machining or additional hardware for assembly. This fast and efficient method is perfect for lightweight and cost-effective applications that still require a sturdy and secure connection. Quick Frame connectors also do not degrade and can even be submerged in water without deteriorating.

Variety of Fastening Options

80/20 has a variety of Quick Frame fastening options that enable connections between multiple profiles (up to eight using just one connector) as well as options to join profiles at varying angles. 80/20 also offers base connectors for projects that will be attached or mounted to any flat surface or T-slot profile. Use a soft faced mallet to install Quick Frame connectors.

Internal Fasteners

Standard Anchor Fastener

- One of the strongest fastening methods
- Consists of SHCS, cam & T-nut
- Requires counterbore machining service (pg. 10-7)
- Infinite positioning, flush connection

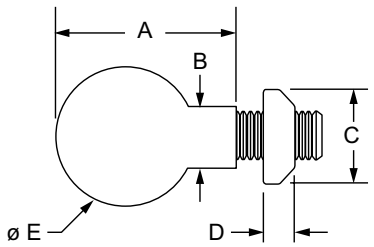

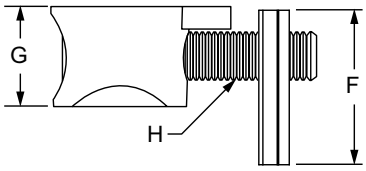

Part No.	Series	T-Nut	Cam Color	A	B	C	D	E	F	G	H	Weight
3395	10	Standard Slide-in	Bright	.730"	.245"	.431"	.171"	.562"	.490"	.406"	10-32 x .75" SHCS	.031 lb
3392	10	Standard Slide-in	Black	.730"	.245"	.431"	.171"	.562"	.490"	.406"	10-32 x .75" SHCS	.031 lb
3896	10	Standard Slide-in	Bright	.730"	.245"	.431"	.171"	.562"	.490"	.406"	M5 x 18mm SHCS	.031 lb
3665*	10	Economy Slide-in	Black	.730"	.245"	.380"	.124"	.562"	.625"	.406"	10-32 x .75" SHCS	.030 lb
3662**	10	Roll-in w/ Flex Handle	Bright	.730"	.245"	.395"	.200"	.562"	.620"	.406"	10-32 x .75" SHCS	.030 lb
3363	10	Roll-in w/ Flex Handle	Bright	.730"	.245"	.395"	.200"	.562"	.620"	.406"	10-32 x .75" SHCS	.031 lb
3360	15	Standard Slide-in	Bright	1.383"	.309"	.625"	.250"	.810"	.700"	.625"	5/16-18 x 1.30" SHCS	.101 lb
3359	15	Standard Slide-in	Black	1.383"	.309"	.625"	.250"	.810"	.700"	.625"	5/16-18 x 1.30" SHCS	.102 lb
3660**	15	Standard Slide-in	Bright	1.383"	.309"	.625"	.250"	.810"	.700"	.625"	5/16-18 x 1.30" SHCS	.101 lb
3897	15	Standard Slide-in	Bright	1.383"	.309"	.625"	.250"	.810"	.700"	.625"	M8 x 32mm SHCS	.105 lb
3362	15	Roll-in w/ Flex Handle	Bright	1.383"	.309"	.510"	.285"	.810"	.875"	.625"	5/16-18 x 1.30" SHCS	.099 lb
3373	15	Roll-in w/ Ball Spring	Bright	1.383"	.309"	.551"	.291"	.810"	.886"	.625"	5/16-18 x 1.30" SHCS	.099 lb
3661*	15	Roll-in w/ Flex Handle	Bright	1.383"	.309"	.510"	.285"	.810"	.875"	.625"	5/16-18 x 1.25" SHCS	.099 lb
13184	20	Roll-in w/ Ball Spring	Bright	16.90mm	5.00mm	7.90mm	4.20mm	11.80mm	11.85mm	8.50mm	M4 x 14mm SHCS	.0091 kg
25-3896	25	Standard Slide-in	Bright	18.54mm	6.22mm	10.94mm	4.34mm	14.27mm	12.44mm	10.31mm	M5 x 18mm SHCS	.0145 kg
25-3392	25	Standard Slide-in	Black	18.54mm	6.22mm	10.94mm	6.35mm	14.27mm	12.44mm	10.31mm	M5 x 18mm SHCS	.0145 kg
25-3363	25	Roll-in w/ Flex Handle	Bright	18.54mm	6.22mm	10.03mm	5.08mm	14.27mm	15.74mm	10.31mm	M5 x 18mm SHCS	.0159 kg
13186	30	Economy Slide-in	Bright	25.00mm	8.00mm	13.00mm	3.39mm	15.70mm	20.60mm	12.50mm	M6 x 20mm SHCS	.0213 kg
40-3897	40	Standard Slide-in	Bright	33.00mm	7.84mm	15.87mm	6.35mm	19.93mm	17.45mm	15.97mm	M8 x 30mm SHCS	.0449 kg
40-3359	40	Standard Slide-in	Black	33.00mm	7.84mm	15.87mm	6.35mm	19.93mm	17.45mm	15.97mm	M8 x 30mm SHCS	.0449 kg
40-3362	40	Roll-in w/ Flex Handle	Bright	33.00mm	7.84mm	12.95mm	7.23mm	19.93mm	22.22mm	15.97mm	M8 x 30mm SHCS	.0446 kg
40-3373	40	Roll-in w/ Ball Spring	Bright	33.00mm	7.84mm	14.00mm	7.39mm	19.93mm	23.00mm	15.97mm	M8 x 30mm SHCS	.0440 kg

*Part number comes with stainless steel bolt and T-nut.
**Part number comes with stainless steel bolt and zinc T-nut.

Anchor Fastener Assembly

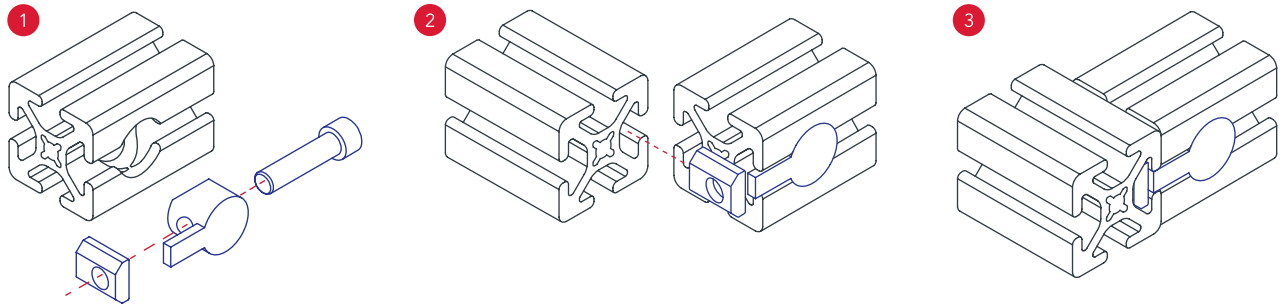

80/20 BUILD YOUR IDEA
More on 80/20® products available at 8020.net

Standard Anchor Fastener (Cam Only)

- Available without SHCS & T-nut
- Requires counterbore machining service (pg. 10-7)

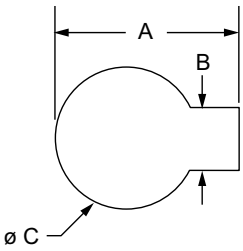

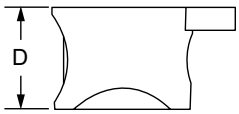

Part No.	Series	Material	Cam Color	A	B	C	D	Weight
3391	10	Zinc	Black	.730"	.245"	.562"	.406"	.015 lb
3396	10		Bright	.730"	.245"	.562"	.406"	.015 lb
3354	15		Black	1.383"	.309"	.810"	.625"	.045 lb
3361	15		Bright	1.383"	.309"	.810"	.625"	.045 lb
13183	20		Bright	16.90mm	5.00mm	11.80mm	8.50mm	.0032 kg
25-3396	25		Bright	18.54mm	6.22mm	14.27mm	10.31mm	.0069 kg
25-3391	25		Black	18.54mm	6.22mm	14.27mm	10.31mm	.0070 kg
13185	30		Bright	25.00mm	8.00mm	15.70mm	12.50mm	.0095 kg
40-3361	40		Bright	33.00mm	7.84mm	19.93mm	15.97mm	.0195 kg
40-3354	40		Black	33.00mm	7.84mm	19.93mm	15.97mm	.0195 kg

Required Machining Services

Machining Type	Profile Machined	Reference Page
Counterbore	Mounting Profile	10-7

Internal Fasteners

Double Anchor Fastener

- One of the strongest fastening methods
- Consists of SHCS (2), cam (2) & double T-nut
- Requires counterbore machining service (pg. 10-7)
- Cams only available on page 3-13

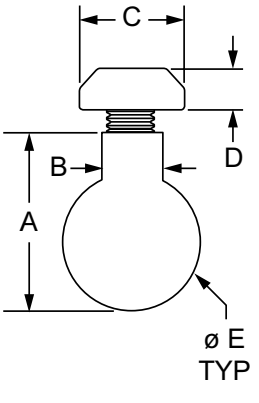

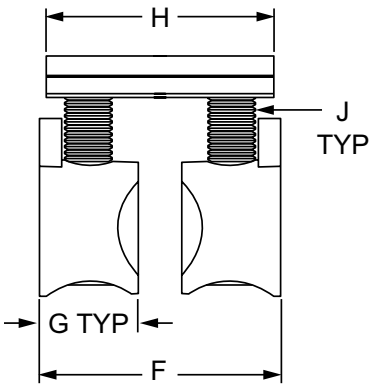

Part No.	Series	Profile Size	Material	Cam Color	A	B	C	D	E	F	G	H	J	Weight
3090	10	1.0"	Zinc	Bright	.730"	.245"	.431"	.171"	.562"	.961"	.406"	.936"	10-32 x .75" SHCS	.061 lb
3091	10	1.0"		Black	.730"	.245"	.431"	.171"	.562"	.961"	.406"	.936"	10-32 x .75" SHCS	.067 lb
3094	10	1.0"		Bright	.730"	.245"	.431"	.171"	.562"	.986"	.406"	.936"	M5 x 18mm SHCS	.016 lb
3092	10	2.0"		Bright	.730"	.245"	.431"	.171"	.562"	1.961"	.406"	1.936"	10-32 x .75" SHCS	.080 lb
3093	10	2.0"		Black	.730"	.245"	.431"	.171"	.562"	1.961"	.406"	1.936"	10-32 x .75" SHCS	.080 lb
3096	10	2.0"		Bright	.730"	.245"	.431"	.171"	.562"	1.961"	.406"	1.936"	M5 x 18mm SHCS	.082 lb
3095	15	1.5"		Black	1.378"	.313"	.625"	.250"	.810"	1.501"	.625"	1.437"	5/16-18 x 1.30" SHCS	.205 lb
3098	15	1.5"		Bright	1.383"	.309"	.625"	.250"	.810"	1.469"	.625"	1.437"	5/16-18 x 1.30" SHCS	.205 lb
3100	15	1.5"		Bright	1.383"	.309"	.625"	.250"	.810"	1.469"	.625"	1.437"	M8 x 32mm SHCS	.212 lb
3097	15	3.0"		Black	1.383"	.309"	.625"	.250"	.810"	2.959"	.625"	2.937"	5/16-18 x 1.30" SHCS	.263 lb
3099	15	3.0"		Bright	1.383"	.309"	.625"	.250"	.810"	2.959"	.625"	2.937"	5/16-18 x 1.30" SHCS	.267 lb
3102	15	3.0"		Bright	1.383"	.309"	.625"	.250"	.810"	2.959"	.625"	2.937"	M8 x 32mm SHCS	.273 lb
25-3094	25	25mm		Bright	18.54mm	6.22mm	10.94mm	4.34mm	14.27mm	24.61mm	10.31mm	23.77mm	M5 x 18mm SHCS	.0177 kg
25-3096	25	50mm		Bright	18.54mm	6.22mm	10.94mm	4.34mm	14.27mm	44.72mm	10.31mm	49.17mm	M5 x 18mm SHCS	.0263 kg
40-3100	40	40mm		Bright	33.00mm	7.84mm	15.87mm	6.35mm	19.93mm	39.13mm	15.97mm	38.25mm	M8 x 30mm SHCS	.0581 kg
40-3102	40	80mm		Bright	33.00mm	7.84mm	15.87mm	6.35mm	19.93mm	79.07mm	15.97mm	78.15mm	M8 x 30mm SHCS	.1206 kg

Required Machining Services

Machining Type	Profile Machined	Reference Page
Counterbores	Mounting Profile	10-7

Double Anchor Fastener Assembly

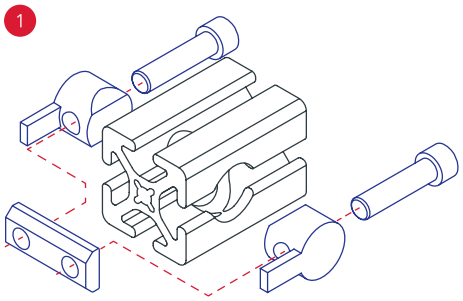

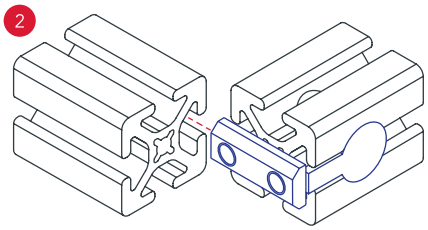

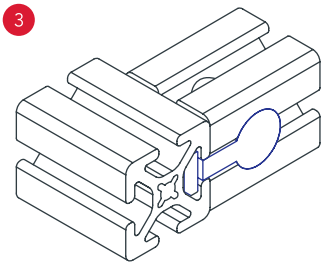

80/20 BUILD YOUR IDEA
More on 80/20® products available at 8020.net

Butt Fastener

- Connects profiles end-to-end
- Requires counterbore machining service (pg. 10-7)

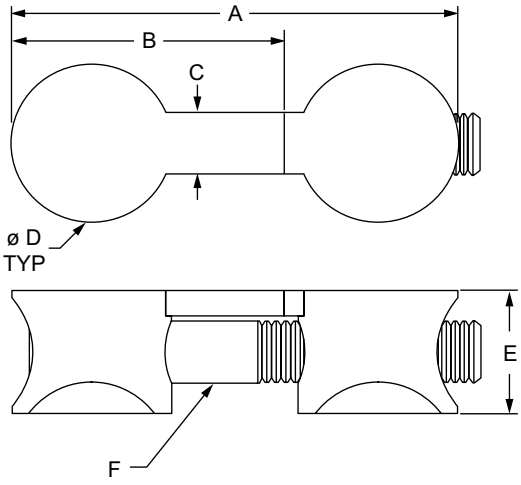

Part No.	Series	Material	Cam Color	A	B	C	D	E	F	Weight
3369	10	Zinc	Bright	1.287"	.730"	.245"	.562"	.406"	10-32 x 1.03" SHCS	.043 lb
3369-Black	10		Black	1.287"	.730"	.245"	.562"	.406"	10-32 x 1.03" SHCS	.043 lb
3370	15		Bright	2.223"	1.383"	.309"	.810"	.625"	5/16 x 1.75" SHCS	.143 lb
3370-Black	15		Black	2.223"	1.383"	.309"	.810"	.625"	5/16 x 1.75" SHCS	.143 lb
25-3369	25		Bright	37.89mm	18.54mm	6.22mm	14.14mm	10.31mm	M5 x 25mm SHCS	.0197 kg
25-3369-Black	25		Black	37.89mm	18.54mm	6.22mm	14.14mm	10.31mm	M5 x 25mm SHCS	.0197 kg
40-3370	40		Bright	58.27mm	33.00mm	7.84mm	19.93mm	15.97mm	M8 x 50mm SHCS	.0658 kg
40-3370-Black	40		Black	58.15mm	33.00mm	7.84mm	19.93mm	16.00mm	M8 x 50mm SHCS	.0658 kg

Required Machining Services

Machining Type	Profile Machined	Reference Page
Counterbore	Mounting Profiles	10-7

Butt Fastener Assembly

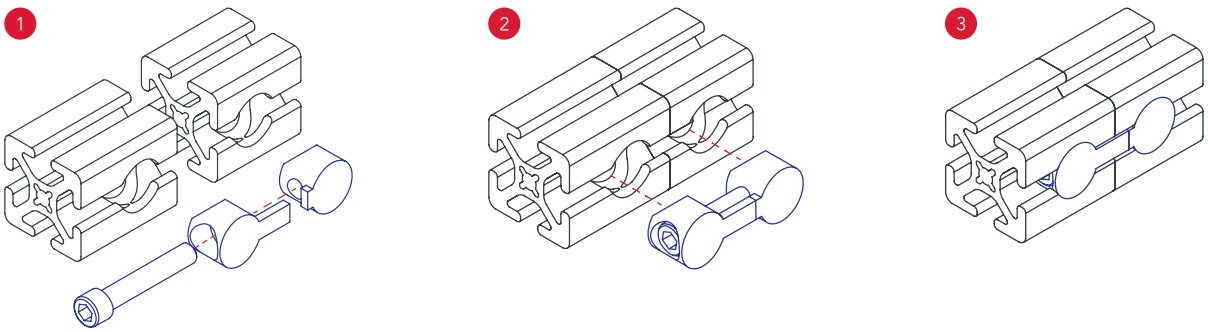

Internal Fasteners

Standard End Fastener

- Winged tabs of clip prevents mating profile from rotating (clips only available)
- Mounting profile requires end tap (pg. 10-3); mating profile requires access hole (pg. 10-5)

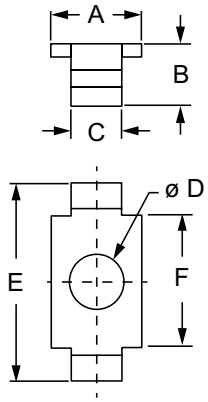

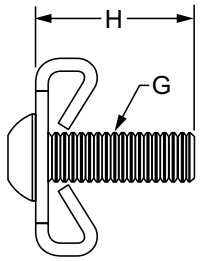

Part No.	Series	Type	Material	Color	A	B	C	D	E	F	G	H	Weight
3381	10	Assembly	Steel	Black	.431"	.293"	.240"	.257"	.937"	.625"	1/4-20	.750"	.018 lb
3682*	10	Assembly		Bright	.431"	.293"	.240"	.257"	.937"	.625"	1/4-20	.750"	.018 lb
3895	10	Assembly		Bright	.431"	.293"	.240"	.257"	.937"	.625"	M6	.787"	.018 lb
3378	10	Clip		Black	.431"	.293"	.240"	.257"	.937"	.625"	—	—	.008 lb
3681	10	Clip		Bright	.431"	.293"	.240"	.257"	.937"	.625"	—	—	.008 lb
3380	15	Assembly		Black	.625"	.450"	.300"	.340"	1.300"	1.000"	5/16-18	1.000"	.047 lb
3680*	15	Assembly		Bright	.625"	.450"	.300"	.340"	1.300"	1.000"	5/16-18	1.000"	.046 lb
3891	15	Assembly		Bright	.625"	.450"	.300"	.340"	1.300"	1.000"	M8	.984"	.045 lb
3379	15	Clip		Black	.625"	.450"	.300"	.340"	1.300"	1.000"	—	—	.025 lb
3679	15	Clip		Bright	.625"	.450"	.300"	.340"	1.300"	1.000"	—	—	.025 lb
20-3895	20	Assembly		Bright	10.00mm	4.40mm	4.80mm	5.50mm	19.00mm	16.50mm	M5	12.00mm	.0041 kg
20-3681	20	Clip		Bright	10.00mm	4.40mm	4.80mm	5.50mm	19.00mm	16.50mm	—	—	.0017 kg
25-3682*	25	Assembly		Bright	10.94mm	7.44mm	6.09mm	6.52mm	23.79mm	15.87mm	M6	16.00mm	.0080 kg
25-3895	25	Assembly		Bright	10.94mm	7.44mm	6.09mm	6.52mm	23.79mm	15.87mm	M6	16.00mm	.0082 kg
25-3681	25	Clip		Bright	10.94mm	7.44mm	6.09mm	6.52mm	23.79mm	15.87mm	—	—	.0045 kg
30-3891	30	Assembly		Bright	15.00mm	7.49mm	8.00mm	8.50mm	28.70mm	21.00mm	M8	20.00mm	.0170 kg
30-3681	30	Clip		Bright	15.00mm	7.49mm	8.00mm	8.50mm	28.70mm	21.00mm	—	—	.0079 kg
40-3680*	40	Assembly		Bright	15.87mm	11.43mm	7.62mm	8.63mm	33.02mm	25.40mm	M8	25.00mm	.0263 kg
40-3891	40	Assembly		Bright	15.87mm	11.43mm	7.62mm	8.63mm	33.02mm	25.40mm	M8	25.00mm	.0213 kg
40-3679	40	Clip		Bright	15.87mm	11.43mm	7.62mm	8.63mm	33.02mm	25.40mm	—	—	.0109 kg

*Part number comes with a stainless steel bolt.

Required Machining Services

Machining Type	Profile Machined	Reference Page
Tap Profile End	Mounting Profile	10-3
Access Hole	Mating Profile	10-5

End Fastener Assembly

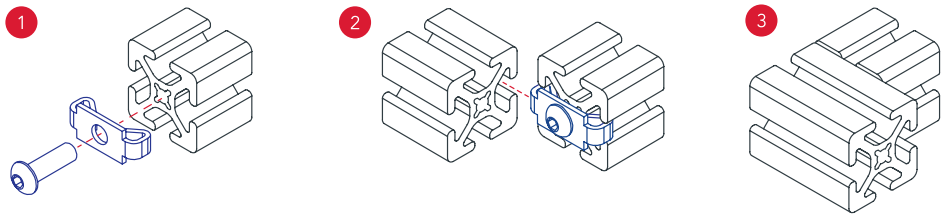

80/20 BUILD YOUR IDEA
More on 80/20® products available at 8020.net

Single Tab End Fastener

- Winged tabs of clip prevents mating profile from rotating (clips only available)
- Mounting profile requires end tap (pg. 10-3); mating profile requires access hole (pg. 10-5)

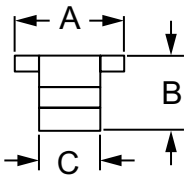

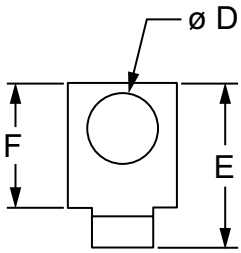

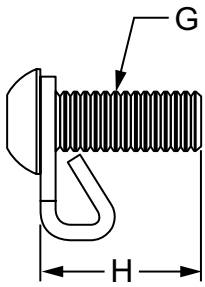

Part No.	Series	Type	Material	Color	A	B	C	D	E	F	G	H	Weight
3383	10	Assembly	Steel	Black	.431"	.293"	.240"	.275"	.645"	.489"	1/4-20	.750"	.015 lb
3183	10	Clip		Black	.431"	.293"	.240"	.275"	.645"	.489"	—	—	.005 lb
3389	15	Assembly		Black	.625"	.450"	.300"	.354"	.916"	.766"	5/16-18	1.000"	.037 lb
3189	15	Clip		Black	.625"	.450"	.300"	.354"	.916"	.766"	—	—	.010 lb
25-3383	25	Assembly		Bright	10.94mm	7.44mm	6.09mm	6.98mm	16.38mm	12.42mm	M6	16.00mm	.0068 kg
25-3183	25	Clip		Bright	10.94mm	7.44mm	6.09mm	6.98mm	16.38mm	12.42mm	—	—	.0027 kg
40-3389	40	Assembly		Bright	15.87mm	11.43mm	7.62mm	8.99mm	23.26mm	19.45mm	M8	25.00mm	.0168 kg
40-3189	40	Clip		Bright	15.87mm	11.43mm	7.62mm	8.99mm	23.26mm	19.45mm	—	—	.0064 kg

Required Machining Services

Machining Type	Profile Machined	Reference Page
Tap Profile End	Mounting Profile	10-3
Access Hole	Mating Profile	10-5

Single Tab End Fastener Assembly

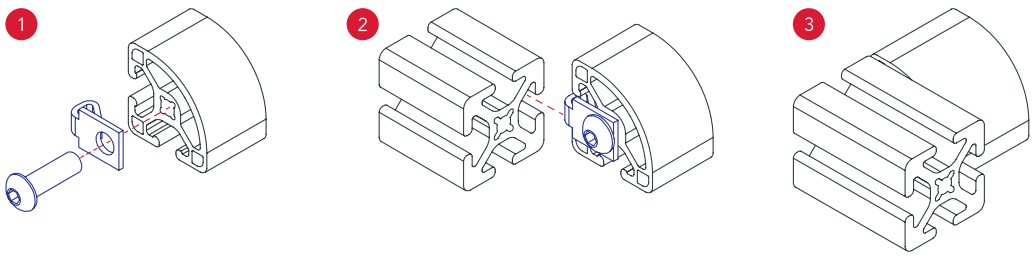

Internal Fasteners

Double End Fastener

- Winged tabs of clip prevents mating profile from rotating (clips only available)
- Mounting profile requires end taps (pg. 10-3); mating profile requires access holes (pg. 10-5)

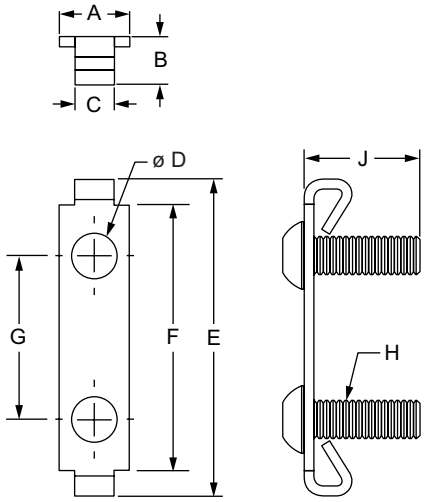

Part No.	Series	Type	Material	Color	A	B	C	D	E	F	G	H	J	Weight
3343	10	Assembly	Steel	Black	.431"	.293"	.240"	.275"	1.937"	1.625"	1.000"	1/4-20	.750"	.040 lb
3792*	10	Assembly		Bright	.431"	.293"	.240"	.275"	1.937"	1.625"	1.000"	1/4-20	.750"	.035 lb
3901	10	Assembly		Bright	.431"	.293"	.240"	.275"	1.937"	1.625"	1.000"	M6	1.000"	.034 lb
3351	10	Clip		Black	.431"	.293"	.240"	.275"	1.937"	1.625"	1.000"	—	—	.013 lb
3794	10	Clip		Bright	.431"	.293"	.240"	.275"	1.937"	1.625"	1.000"	—	—	.010 lb
3344	15	Assembly		Black	.625"	.450"	.300"	.354"	2.800"	2.500"	1.500"	5/16-18	1.000"	.090 lb
3793*	15	Assembly		Bright	.625"	.450"	.300"	.354"	2.800"	2.500"	1.500"	5/16-18	1.000"	.091 lb
3902	15	Assembly		Bright	.625"	.450"	.300"	.354"	2.800"	2.500"	1.500"	M8	.984"	.093 lb
3352	15	Clip		Black	.625"	.450"	.300"	.354"	2.800"	2.500"	1.500"	—	—	.040 lb
3795	15	Clip		Bright	.625"	.450"	.300"	.354"	2.800"	2.500"	1.500"	—	—	.040 lb

*Part number comes with stainless steel bolts.

Required Machining Services

Machining Type	Profile Machined	Reference Page
Tap Profile End	Mounting Profile	10-3
Access Hole	Mating Profile	10-5

Double End Fastener Assembly

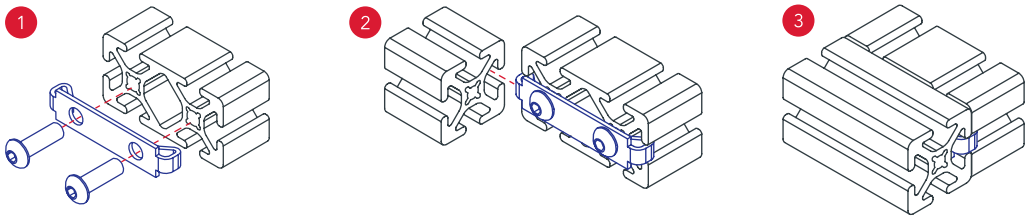

80/20 BUILD YOUR IDEA
More on 80/20® products available at 8020.net

Hidden Corner Connector

- No machining required, includes two set screws for quick, easy connection.
- Connects inside two profiles inside-inside or inside one profile and outside one profile.

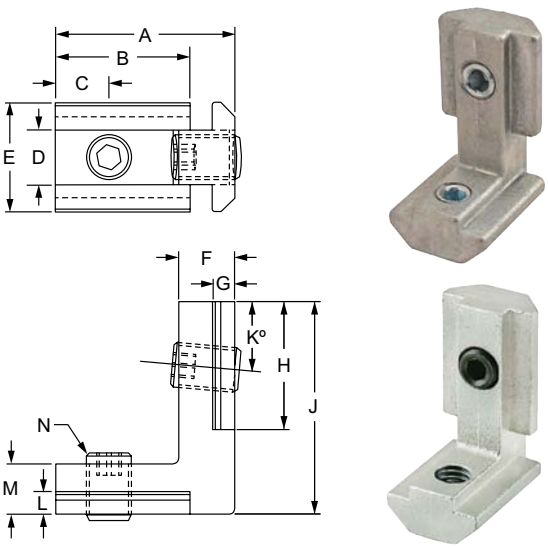

Inside-Inside Connector

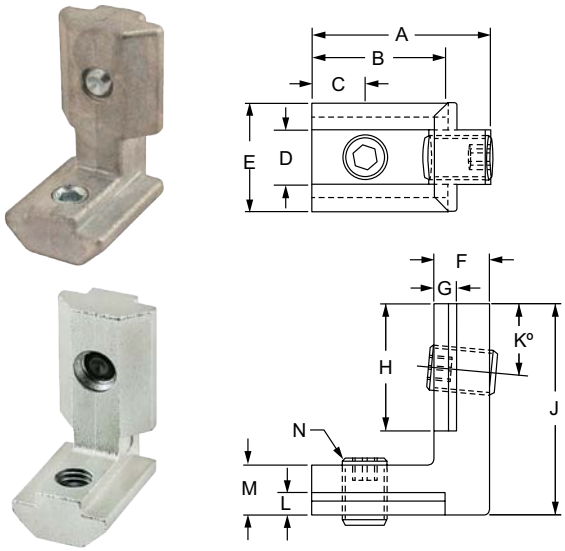

Inside-Outside Connector

Part No.	Series	Type	Hex Size	Material	A	B	C	D	E	F	G	H	J	K	L	M	N	Weight
33440	10 25	Inside-Inside	2.5mm	Bright Zinc	.700"	.623"	.200"	.238"	.480"	.258"	.185"	.641"	1.000"	5°	.185"	.258"	M5 x 0.8	.028 lb
33460	10 25	Inside-Outside			.700"	.623"	.200"	.238"	.480"	.258"	.185"	.641"	1.000"	5°	.185"	.258"	M5 x 0.8	.028 lb
33450	15 30 40	Inside-Inside	3.0mm	Natural Zinc	.827"	.750"	.236"	.307"	.621"	.323"	.228"	.638"	1.181"	5°	.228"	.313"	M6 x 12	.054 lb
33470	15 30 40	Inside-Outside			.827"	.732"	.236"	.307"	.621"	.323"	.228"	.638"	1.181"	5°	.228"	.313"	M6 x 12	.052 lb
33490	45	Inside-Inside	4.0mm	Bright Zinc	32.00mm	28.00mm	10.00mm	9.80mm	19.00mm	8.70mm	3.80mm	25.00mm	38.00mm	0°	3.80mm	8.70mm	M8 x 12	.0445 kg
33530	45	Inside-Outside			32.00mm	28.00mm	10.00mm	9.80mm	19.00mm	8.70mm	3.80mm	25.00mm	38.00mm	0°	3.80mm	8.70mm	M8 x 12	.0445 kg

Hidden Corner Connector Assembly

Inside-Outside Connector Shown

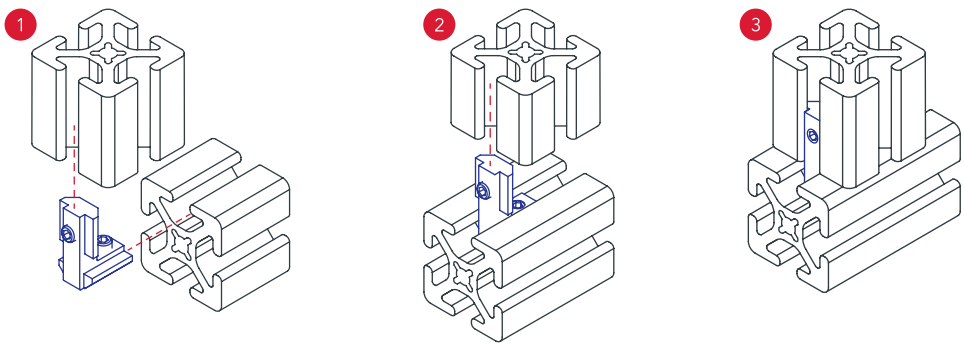

Internal Fasteners

Miter Connector

- Internal connections ranging from 90 degrees to 180 degrees
- Requires a miter connector profile milling service (pg. 10-18)

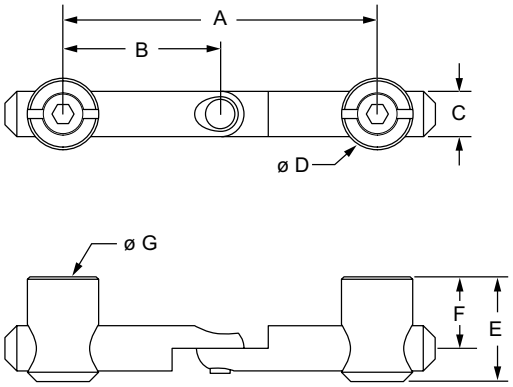

Part No.	Series	Material	Finish	A	B	C	D	E	F	G	Weight
13193	15 40 45	Steel	Bright Zinc	66.00mm (2.598")	33.00mm (1.299")	9.50mm (.374")	15.00mm (.591")	22.00mm (.866")	15.00mm (.591")	M10 x 12	.0795 kg (.175 lb)

Required Machining Services

Machining Type	Profile Machined	Reference Page
Miter Connector Profile Milling	Each Profile	10-18

Miter Connector Assembly

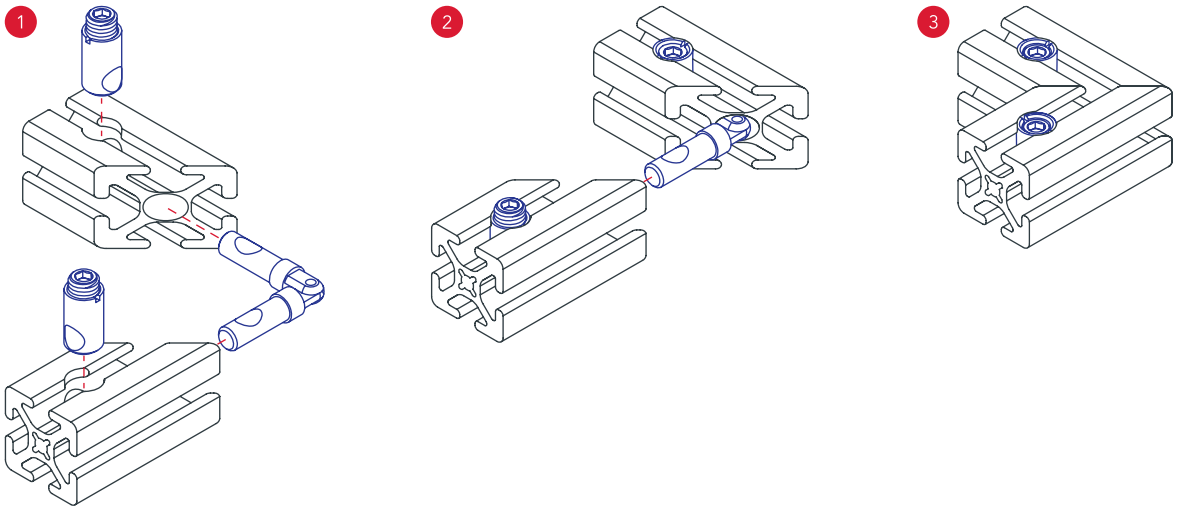

80/20 BUILD YOUR IDEA
More on 80/20® products available at 8020.net

90 Degree Inside Corner Connector

- No machining required
- Includes four set screws
- Zinc connector has tapped hole for panel mounting
- Suggested tool is a 1/8” (3.175mm) hex wrench

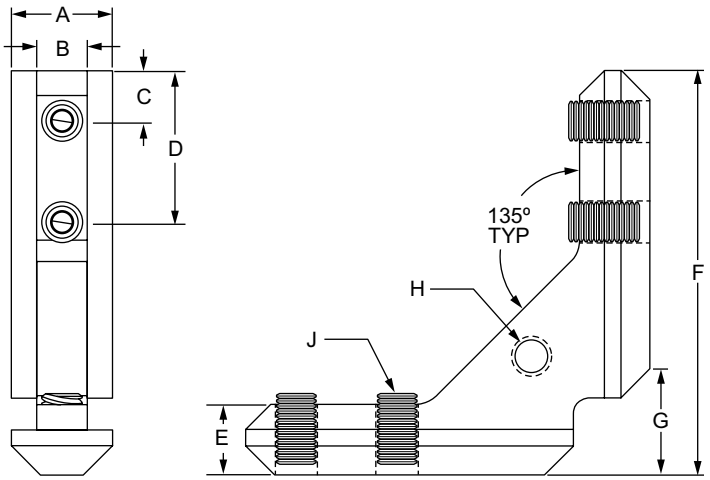

Aluminum Zinc

Part No.	Series	Material	Finish	A	B	C	D	E	F	G	H	J	Weight
3364	15 40	Aluminum	Anodize	.625”	.313”	.312”	.937”	.436”	2.50”	.655”	—	1/4-20 x 1/2”	.097 lb
3368*	15 40	Zinc	Natural	.625”	.313”	.312”	.937”	.436”	2.50”	.655”	1/4-20 Tap	1/4-20 x 1/2”	.192 lb
40-3368*	40	Zinc	Natural	15.88mm	7.95mm	7.92mm	23.79mm	11.07mm	63.50mm	16.63mm	1/4-20 Tap	1/4-20 x 1/2”	.0821 kg

*Tap thru available

90 Degree Inside Corner Connector Assembly

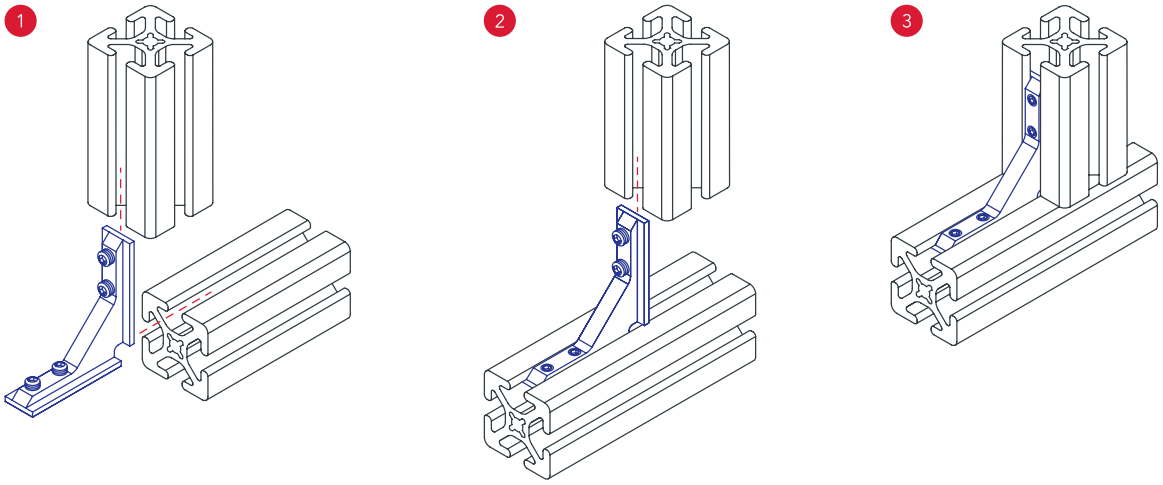

Internal Fasteners

Central Connector

- 90 degree, hidden connection used when profile ends are captivated
- Requires central connector profile milling machining service (pg. 10-20)

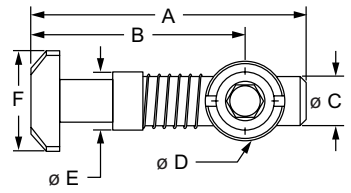

Horizontal

Vertical

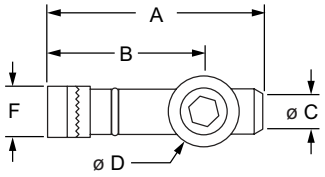

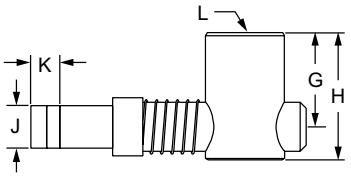

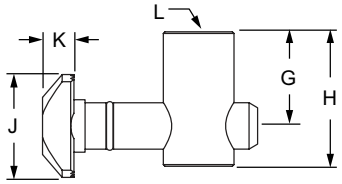

Part No.	Series	Orientation	Spring	Material	A	B	C	D	E	F	G	H	J	K	L	Weight
13187	15 40	Vertical	Yes	Steel	2.047"	1.594"	.374"	.590"	.444"	.307"	.669"	.945"	.748"	.217"	M12 x 12	.0485 kg
13188	15 40	Horizontal			2.047"	1.594"	.374"	.590"	.444"	.748"	.669"	.945"	.307"	.217"	M12 x 12	.0462 kg
13194	30	Vertical	No		32.80mm	23.80mm	6.90mm	10.80mm	—	7.80mm	14.00mm	20.00mm	15.30mm	4.80mm	M8 x 10	.0426 kg
13195	30	Horizontal			32.80mm	23.80mm	6.90mm	10.80mm	—	15.30mm	14.00mm	20.00mm	7.80mm	4.80mm	M8 x 10	.0426 kg
14012	45	Vertical	No		45.50mm	32.00mm	9.60mm	16.70mm	—	9.60mm	18.00mm	28.00mm	19.50mm	5.40mm	M12 x 12	.0558 kg
14013	45	Horizontal			45.50mm	32.00mm	9.60mm	16.70mm	—	19.50mm	18.00mm	28.00mm	9.60mm	5.40mm	M12 x 12	.0553 kg

Required Machining Services

Machining Type	Profile Machined	Reference Page
Central Connector Profile Milling	Mounting Profile	10-20

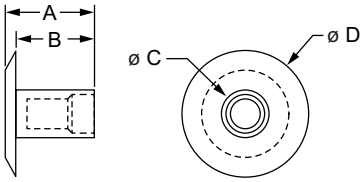

Central Connector Cover Cap

Part No.	Series	Material	A	B	C	D	Weight
13001	45	Black Nylon	12.00mm	10.50mm	6.40mm	17.00mm	.0022 Kg

Central Connector Assembly

Vertical Central Connector Shown

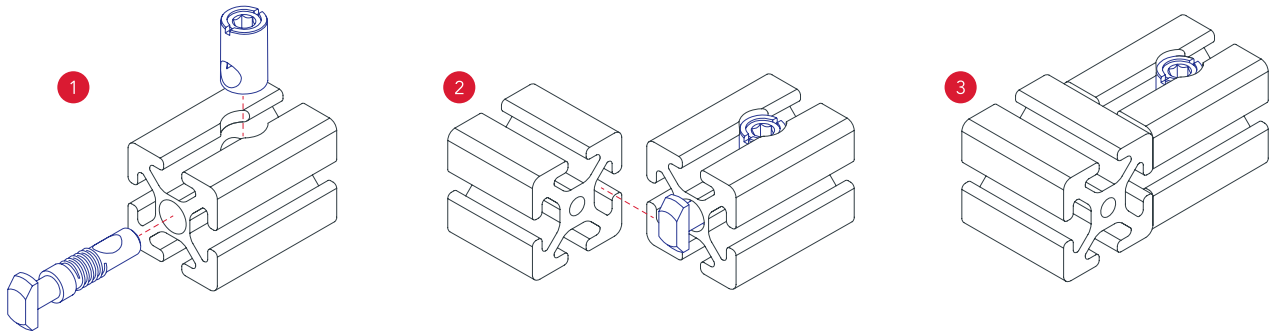

80/20 BUILD YOUR IDEA
More on 80/20® products available at 8020.net

Bolt Connector

- 90 degree connection that loads from side or end of profile
- Requires bolt connector profile milling service on the mounting profile (pg. 10-22)

13189

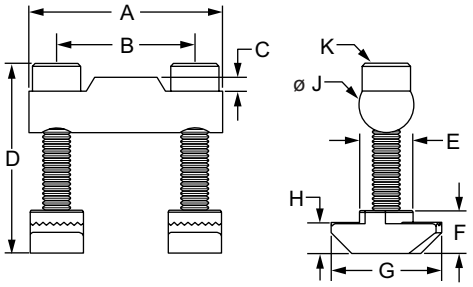

13190
13192

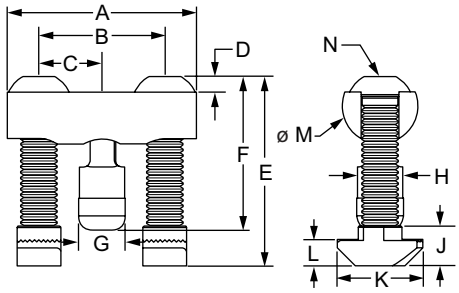

Part No.	Series	Material	A	B	C	D	E	F	G	H	J	K	L	M	N	Weight
13189	30	Steel	28.00mm	20.00mm	2.00mm	29.00mm	7.70mm	6.20mm	16.00mm	4.40mm	8.00mm	M4 x 25mm	—	—	—	.0243 kg
13190	45		42.00mm	28.00mm	14.00mm	3.40mm	44.40mm	36.50mm	10.30mm	9.70mm	8.80mm	19.00mm	5.80mm	16.80mm	M8 x 40	.0755 kg
13192	45		87.00mm	73.00mm	14.00mm	3.25mm	39.25mm	36.25mm	10.30mm	10.10mm	8.80mm	19.00mm	5.80mm	16.80mm	M8 x 35	.0130 kg

Required Machining Services

Machining Type	Profile Machined	Reference Page
Bolt Connector Profile Milling	Mounting Profile	10-22

Bolt Connector Assembly

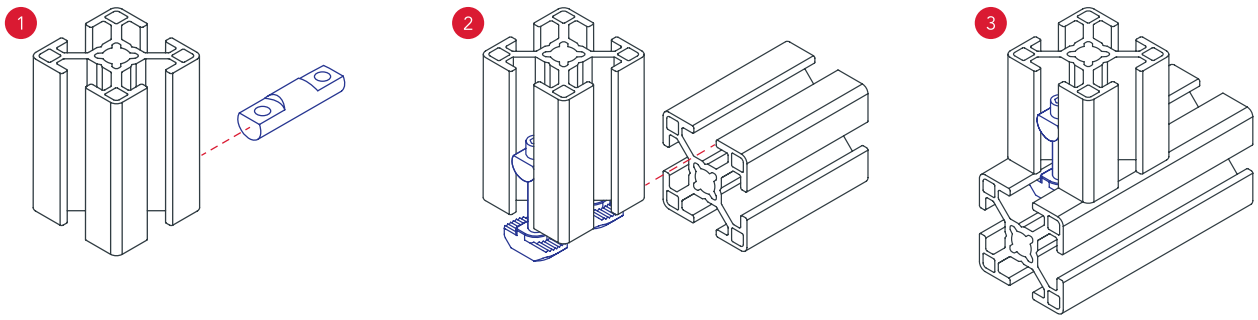

Internal Fasteners

Milling Connector

- No machining required
- Connector can be used in pairs

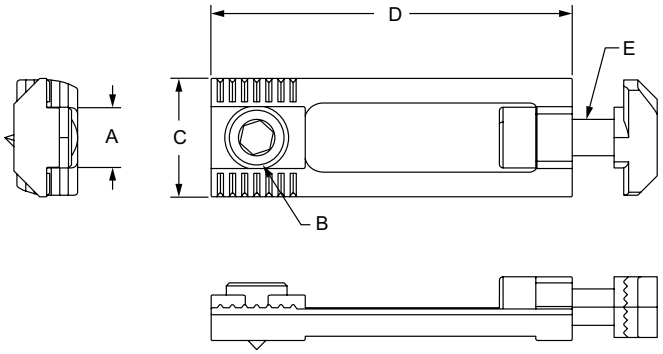

Part No.	Series	Material	Color	A	B	C	D	E	Weight
14116	30	Steel	Bright	7.80mm	M8 x 11	16.00mm	57.50mm	M5 x 14	.0499 kg
14132	15 40			7.80mm	M8 x 11	18.00mm	57.50mm	M5 x 16	.0544 kg
14133	45			9.80mm	M10 x 11	19.50mm	59.50mm	M6 x 20	.0680 kg

Milling Connector Assembly

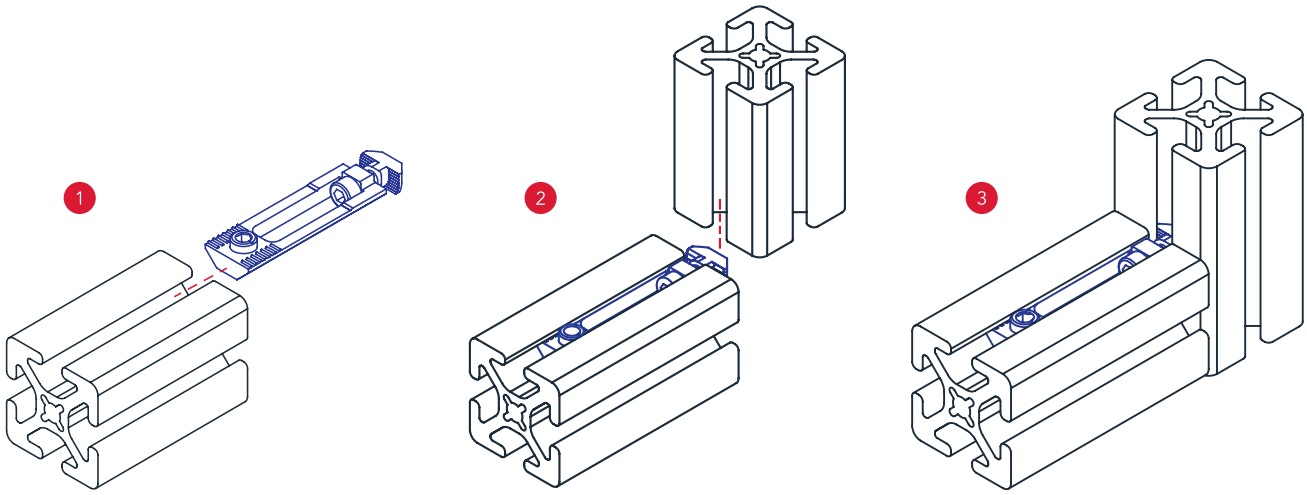

80/20 BUILD YOUR IDEA
More on 80/20® products available at 8020.net

Plate Connector

- Serves as a drop-in connector to the mating profile
- Requires end tap machining service on the mounting profile (pg. 10-3)

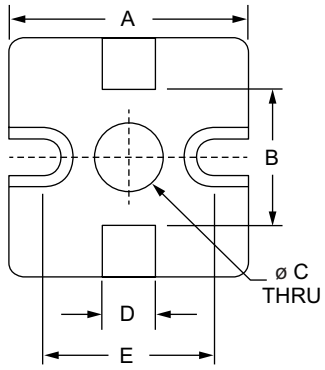

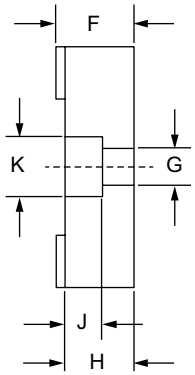

Powder Coat

Natural

Part No.	Series	Material	Finish	A	B	C	D	E	F	G	H	J	K	Weight
14137	45	Zinc	Natural	45.00mm	24.50mm	13.00mm	10.00mm	32.00mm	14.70mm	6.50mm	13.00mm	7.00mm	11.00mm	.0921 kg
14136			Powder Coat	45.00mm	24.50mm	13.00mm	10.00mm	32.00mm	14.70mm	6.50mm	13.00mm	7.00mm	11.00mm	.0894 kg

Required Machining Services

Machining Type	Profile Machined	Reference Page
Tap Profile End	Mounting Profile	10-3

Suggested Hardware (Mount to Profile)

Part No.	Series	Qty.	Description
13004	45	1	M12 x 30mm Six Lobe Screw
11-6516		2	M6 x 16mm SHCS
13129		2	M6 Drop-in T-Nut

Plate Connector Assembly

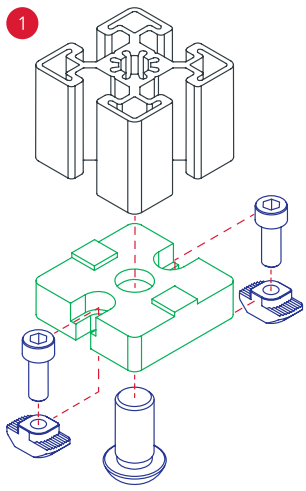

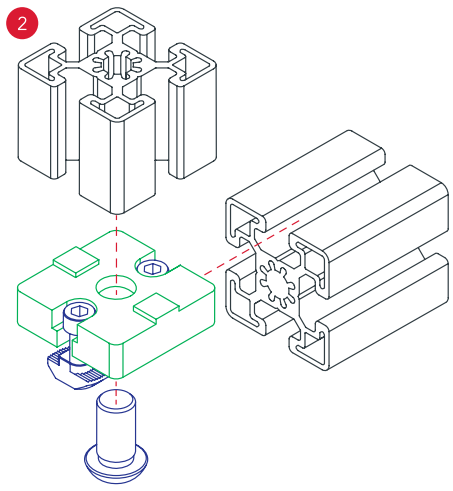

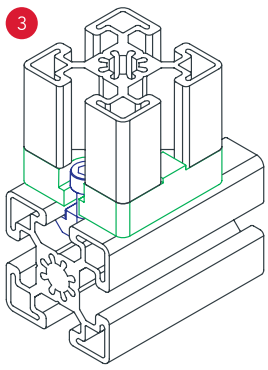

External Fasteners

2 Hole - Straight Flat Plate

- No machining required
- Pre-load to simplify assembly
- Reconfigurable, reusable

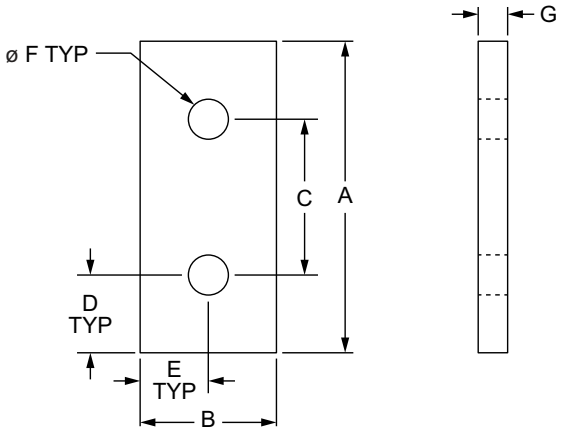

Part No.	Series	Material	Alloy	Finish	A	B	C	D	E	F	G	Weight
4107	10	Aluminum	6005A – T61	Clear Anodize	2.000"	.875"	1.000"	.500"	.438"	.257"	.188"	.029 lb
4107-Black	10			Black Anodize	2.000"	.875"	1.000"	.500"	.438"	.257"	.188"	.029 lb
4307	15 RT			Clear Anodize	3.000"	1.490"	1.500"	.750"	.745"	.328"	.250"	.103 lb
4307-Black	15 RT			Black Anodize	3.000"	1.490"	1.500"	.750"	.745"	.328"	.250"	.103 lb
20-4107	20			Clear Anodize	40.00mm	18.00mm	20.00mm	10.00mm	9.00mm	5.56mm	4.00mm	.0072 kg
20-4107-Black	20			Black Anodize	40.00mm	18.00mm	20.00mm	10.00mm	9.00mm	5.56mm	4.00mm	.0072 kg
25-4107	25			Clear Anodize	50.00mm	22.00mm	25.00mm	12.50mm	11.00mm	6.30mm	4.00mm	.0109 kg
25-4107-Black	25			Black Anodize	50.00mm	22.00mm	25.00mm	12.50mm	11.00mm	6.30mm	4.00mm	.0109 kg
30-4307	30			Clear Anodize	60.00mm	27.00mm	30.00mm	15.00mm	13.50mm	6.30mm	4.00mm	.0163 kg
30-4307-Black	30			Black Anodize	60.00mm	27.00mm	30.00mm	15.00mm	13.50mm	6.30mm	4.00mm	.0163 kg
40-4307	40			Clear Anodize	80.00mm	39.80mm	40.00mm	20.00mm	19.90mm	8.30mm	6.00mm	.0490 kg
40-4307-Black	40			Black Anodize	80.00mm	39.80mm	40.00mm	20.00mm	19.90mm	8.30mm	6.00mm	.0490 kg
45-4307	45			Clear Anodize	90.00mm	42.00mm	45.00mm	22.50mm	21.00mm	8.30mm	6.00mm	.0576 kg
45-4307-Black	45			Black Anodize	90.00mm	42.00mm	45.00mm	22.50mm	21.00mm	8.30mm	6.00mm	.0576 kg

Suggested Hardware (Mount to T-Slot)

Part No.	Series	Qty.	Bolt	T-Nut
3321	10	2	1/4-20 x 1/2" FBHSCS	Economy
3320	15	2	5/16-18 x 11/16" FBHSCS	Economy
75-3656	20	2	M5 x 10mm BHSCS	Economy
75-3404	25	2	M6 x 10mm BHSCS	Economy
75-3600	30	2	M6 x 12mm BHSCS	Drop-in
75-3422	40	2	M8 x 16mm BHSCS	Economy
75-3619	45	2	M8 x 18mm BHSCS	Drop-in

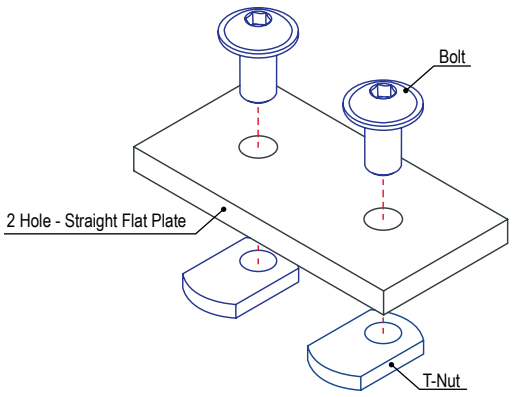

Suggested Hardware (Mount to Ready Tube)

Part No.	Series	Qty.	Bolt Assembly
3960	RT	2	5/16-18 x 2.00" Flange Hex Head Bolt w/ Flanged Hex Nut

80/20 BUILD YOUR IDEA
More on 80/20® products available at 8020.net

3 Hole - Straight Flat Plate

- No machining required
- Pre-load to simplify assembly
- Reconfigurable, reusable

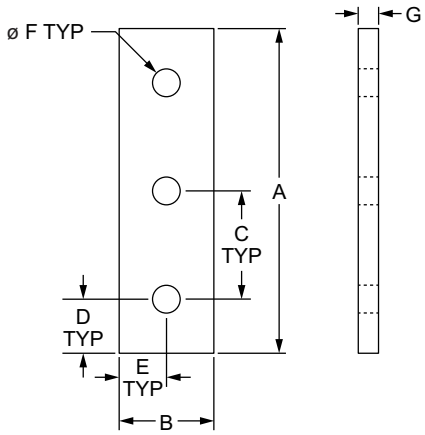

Part No.	Series	Material	Alloy	Finish	A	B	C	D	E	F	G	Weight
4118	10	Aluminum	6005A – T61	Clear Anodize	3.000"	.875"	1.000"	.500"	.438"	.257"	.188"	.044 lb
4118-Black	10			Black Anodize	3.000"	.875"	1.000"	.500"	.438"	.257"	.188"	.044 lb
4306	15			Clear Anodize	4.500"	1.490"	1.500"	.750"	.745"	.328"	.250"	.155 lb
4306-Black	15 RT			Black Anodize	4.500"	1.490"	1.500"	.750"	.745"	.328"	.250"	.155 lb
20-4118	15 RT			Clear Anodize	60.00mm	18.00mm	20.00mm	10.00mm	9.00mm	5.56mm	4.00mm	.0108 kg
20-4118-Black	20			Black Anodize	60.00mm	18.00mm	20.00mm	10.00mm	9.00mm	5.56mm	4.00mm	.0108 kg
25-4118	25			Clear Anodize	75.00mm	22.00mm	25.00mm	12.50mm	11.00mm	6.30mm	4.00mm	.0163 kg
25-4118-Black	25			Black Anodize	75.00mm	22.00mm	25.00mm	12.50mm	11.00mm	6.30mm	4.00mm	.0163 kg
30-4306	30			Clear Anodize	90.00mm	27.00mm	30.00mm	15.00mm	13.50mm	6.30mm	4.00mm	.0249 kg
30-4306-Black	30			Black Anodize	90.00mm	27.00mm	30.00mm	15.00mm	13.50mm	6.30mm	4.00mm	.0249 kg
40-4306	40			Clear Anodize	120.00mm	39.80mm	40.00mm	20.00mm	19.90mm	8.30mm	6.00mm	.0730 kg
40-4306-Black	40			Black Anodize	120.00mm	39.80mm	40.00mm	20.00mm	19.90mm	8.30mm	6.00mm	.0730 kg
45-4306	45			Clear Anodize	135.00mm	42.00mm	45.00mm	22.50mm	21.00mm	8.30mm	6.00mm	.0880 kg
45-4306-Black	45			Black Anodize	135.00mm	42.00mm	45.00mm	22.50mm	21.00mm	8.30mm	6.00mm	.0880 kg

Suggested Hardware (Mount to T-Slot)

Part No.	Series	Qty.	Bolt	T-Nut
3321	10	3	1/4-20 x 1/2" FBHSCS	Economy
3320	15	3	5/16-18 x 11/16" FBHSCS	Economy
75-3656	20	3	M5 x 10mm BHSCS	Economy
75-3404	25	3	M6 x 10mm BHSCS	Economy
75-3600	30	3	M6 x 12mm BHSCS	Drop-in
75-3422	40	3	M8 x 16mm BHSCS	Economy
75-3619	45	3	M8 x 18mm BHSCS	Drop-in

Suggested Hardware (Mount to Ready Tube)

Part No.	Series	Qty.	Bolt Assembly
3960	RT	3	5/16-18 x 2.00" Flange Hex Head Bolt w/ Flanged Hex Nut

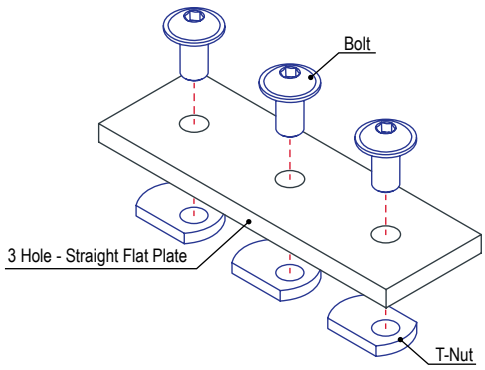

External Fasteners

4 Hole - Straight Flat Plate

- No machining required
- Pre-load to simplify assembly
- Reconfigurable, reusable

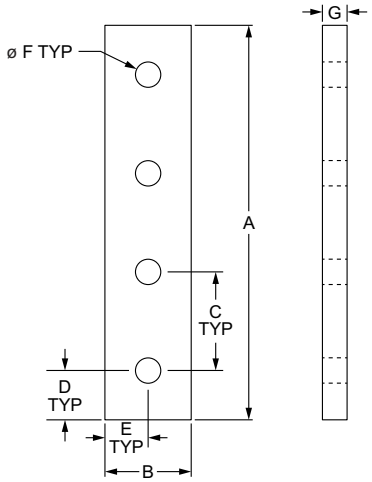

Part No.	Series	Material	Alloy	Finish	A	B	C	D	E	F	G	Weight
4117	10	Aluminum	6005A – T61	Clear Anodize	4.000"	.875"	1.000"	.500"	.438"	.257"	.188"	.058 lb
4117-Black	10			Black Anodize	4.000"	.875"	1.000"	.500"	.438"	.257"	.188"	.058 lb
4305	15 RT			Clear Anodize	6.000"	1.490"	1.500"	.750"	.745"	.328"	.250"	.206 lb
4305-Black	15 RT			Black Anodize	6.000"	1.490"	1.500"	.750"	.745"	.328"	.250"	.206 lb
20-4117	20			Clear Anodize	80.00mm	18.00mm	20.00mm	10.00mm	9.00mm	5.56mm	4.00mm	.0145 kg
20-4117-Black	20			Black Anodize	80.00mm	18.00mm	20.00mm	10.00mm	9.00mm	5.56mm	4.00mm	.0145 kg
25-4117	25			Clear Anodize	100.00mm	22.00mm	25.00mm	12.50mm	11.00mm	6.30mm	4.00mm	.0227 kg
25-4117-Black	25			Black Anodize	100.00mm	22.00mm	25.00mm	12.50mm	11.00mm	6.30mm	4.00mm	.0227 kg
30-4305	30			Clear Anodize	120.00mm	27.00mm	30.00mm	15.00mm	13.50mm	6.81mm	4.00mm	.0332 kg
30-4305-Black	30			Black Anodize	120.00mm	27.00mm	30.00mm	15.00mm	13.50mm	6.81mm	4.00mm	.0332 kg
40-4305	40			Clear Anodize	160.00mm	39.80mm	40.00mm	20.00mm	19.90mm	8.30mm	6.00mm	.0975 kg
40-4305-Black	40			Black Anodize	160.00mm	39.80mm	40.00mm	20.00mm	19.90mm	8.30mm	6.00mm	.0975 kg
45-4305	45			Clear Anodize	180.00mm	44.50mm	45.00mm	22.50mm	22.25mm	8.33mm	6.00mm	.1255 kg
45-4305-Black	45			Black Anodize	180.00mm	44.50mm	45.00mm	22.50mm	22.25mm	8.33mm	6.00mm	.1255 kg

Suggested Hardware (Mount to T-Slot)

Part No.	Series	Qty.	Bolt	T-Nut
3321	10	4	1/4-20 x 1/2" FBHSCS	Economy
3320	15	4	5/16-18 x 11/16" FBHSCS	Economy
75-3656	20	4	M5 x 10mm BHSCS	Economy
75-3404	25	4	M6 x 10mm BHSCS	Economy
75-3600	30	4	M6 x 12mm BHSCS	Drop-in
75-3422	40	4	M8 x 16mm BHSCS	Economy
75-3619	45	4	M8 x 18mm BHSCS	Drop-in

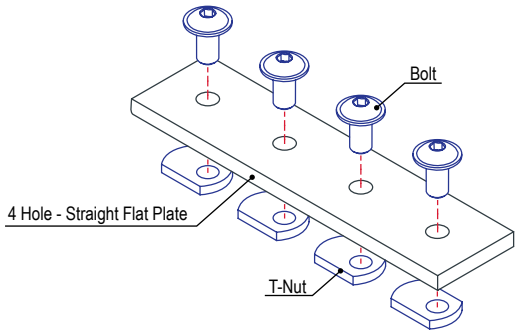

Suggested Hardware (Mount to Ready Tube)

Part No.	Series	Qty.	Bolt Assembly
3960	RT	4	5/16-18 x 2.00" Flange Hex Head Bolt w/ Flanged Hex Nut

80/20 BUILD YOUR IDEA
More on 80/20® products available at 8020.net

4 Hole - Square Flat Plate

- No machining required
- Pre-load to simplify assembly
- Reconfigurable, reusable

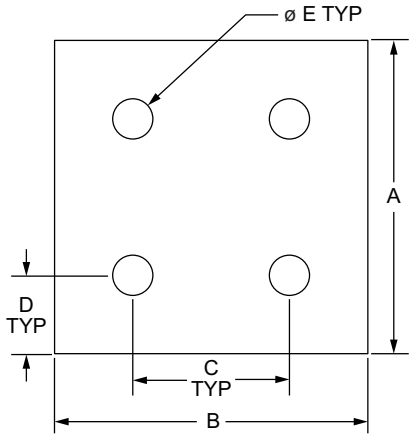

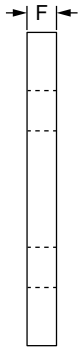

Part No.	Series	Material	Alloy	Finish	A	B	C	D	E	F	Weight
4167	10	Aluminum	6005A – T61	Clear Anodize	2.000"	2.000"	1.000"	.500"	.257"	.188"	.068 lb
4167-Black	10			Black Anodize	2.000"	2.000"	1.000"	.500"	.257"	.188"	.068 lb
4367	15 RT			Clear Anodize	3.000"	3.000"	1.500"	.750"	.328"	.250"	.209 lb
4367-Black	15 RT			Black Anodize	3.000"	3.000"	1.500"	.750"	.328"	.250"	.209 lb
20-4167	20			Clear Anodize	40.00mm	40.00mm	20.00mm	10.00mm	5.56mm	4.00mm	.0162 kg
20-4167-Black	20			Black Anodize	40.00mm	40.00mm	20.00mm	10.00mm	5.56mm	4.00mm	.0162 kg
25-4167	25			Clear Anodize	50.00mm	50.00mm	25.00mm	12.50mm	6.30mm	4.00mm	.0252 kg
25-4167-Black	25			Black Anodize	50.00mm	50.00mm	25.00mm	12.50mm	6.30mm	4.00mm	.0252 kg
30-4367	30			Clear Anodize	60.00mm	60.00mm	30.00mm	15.00mm	6.81mm	4.00mm	.0372 kg
30-4367-Black	30			Black Anodize	60.00mm	60.00mm	30.00mm	15.00mm	6.81mm	4.00mm	.0372 kg
40-4367	40			Clear Anodize	80.00mm	80.00mm	40.00mm	20.00mm	8.30mm	6.00mm	.0958 kg
40-4367-Black	40			Black Anodize	80.00mm	80.00mm	40.00mm	20.00mm	8.30mm	6.00mm	.0958 kg
45-4367	45			Clear Anodize	90.00mm	90.00mm	45.00mm	22.50mm	8.33mm	6.00mm	.1273 kg
45-4367-Black	45			Black Anodize	90.00mm	90.00mm	45.00mm	22.50mm	8.33mm	6.00mm	.1273 kg

Suggested Hardware (Mount to T-Slot)

Part No.	Series	Qty.	Bolt	T-Nut
3321	10	4	1/4-20 x 1/2" FBHSCS	Economy
3320	15	4	5/16-18 x 11/16" FBHSCS	Economy
75-3656	20	4	M5 x 10mm BHSCS	Economy
75-3404	25	4	M6 x 10mm BHSCS	Economy
75-3600	30	4	M6 x 12mm BHSCS	Drop-i n
75-3422	40	4	M8 x 16mm BHSCS	Economy
75-3619	45	4	M8 x 18mm BHSCS	Drop-in

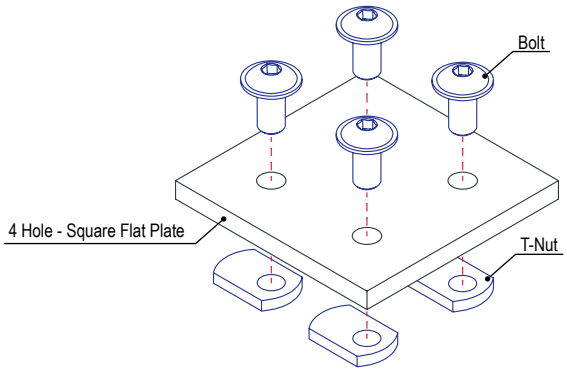

Suggested Hardware (Mount to Ready Tube)

Part No.	Series	Qty.	Bolt Assembly
3960	RT	4	5/16-18 x 2.00" Flange Hex Head Bolt w/ Flanged Hex Nut

External Fasteners

6 Hole - Rectangular Flat Plate

- No machining required
- Pre-load to simplify assembly
- Reconfigurable, reusable

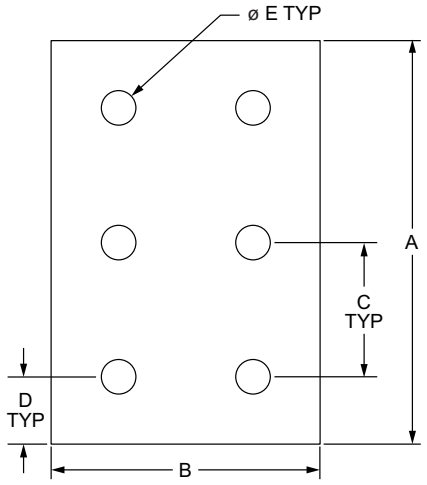

Part No.	Series	Material	Alloy	Finish	A	B	C	D	E	F	Weight
4166	10	Aluminum	6005A – T61	Clear Anodize	3.000"	2.000"	1.000"	.500"	.257"	.188"	.101 lb
4166-Black	10			Black Anodize	3.000"	2.000"	1.000"	.500"	.257"	.188"	.101 lb
4366	15			Clear Anodize	4.500"	3.000"	1.500"	.750"	.328"	.250"	.312 lb
4366-Black	15			Black Anodize	4.500"	3.000"	1.500"	.750"	.328"	.250"	.312 lb
20-4166	20			Clear Anodize	60.00mm	40.00mm	20.00mm	10.00mm	5.56mm	4.00mm	.0243 kg
20-4166-Black	20			Black Anodize	60.00mm	40.00mm	20.00mm	10.00mm	5.56mm	4.00mm	.0243 kg
25-4166	25			Clear Anodize	75.00mm	50.00mm	25.00mm	12.50mm	6.30mm	4.00mm	.0376 kg
25-4166-Black	25			Black Anodize	75.00mm	50.00mm	25.00mm	12.50mm	6.30mm	4.00mm	.0376 kg
30-4366	30			Clear Anodize	90.00mm	60.00mm	30.00mm	15.00mm	6.81mm	4.00mm	.0558 kg
30-4366-Black	30			Black Anodize	90.00mm	60.00mm	30.00mm	15.00mm	6.81mm	4.00mm	.0558 kg
40-4366	40			Clear Anodize	120.00mm	80.00mm	40.00mm	20.00mm	8.30mm	6.00mm	.1438 kg
40-4366-Black	40			Black Anodize	120.00mm	80.00mm	40.00mm	20.00mm	8.30mm	6.00mm	.1438 kg
45-4366	45			Clear Anodize	135.00mm	90.00mm	45.00mm	22.50mm	8.33mm	6.00mm	.1909 kg
45-4366-Black	45			Black Anodize	135.00mm	90.00mm	45.00mm	22.50mm	8.33mm	6.00mm	.1909 kg

Suggested Hardware (Mount to T-Slot)

Part No.	Series	Qty.	Bolt	T-Nut
3321	10	6	1/4-20 x 1/2" FBHSCS	Economy
3320	15	6	5/16-18 x 11/16" FBHSCS	Economy
75-3656	20	6	M5 x 10mm BHSCS	Economy
75-3404	25	6	M6 x 10mm BHSCS	Economy
75-3600	30	6	M6 x 12mm BHSCS	Drop-in
75-3422	40	6	M8 x 16mm BHSCS	Economy
75-3619	45	6	M8 x 18mm BHSCS	Drop-in

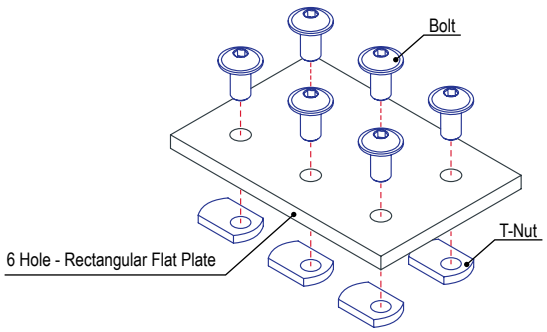

80/20 BUILD YOUR IDEA
More on 80/20® products available at 8020.net

8 Hole - Rectangular Flat Plate

- No machining required
- Pre-load to simplify assembly
- Reconfigurable, reusable

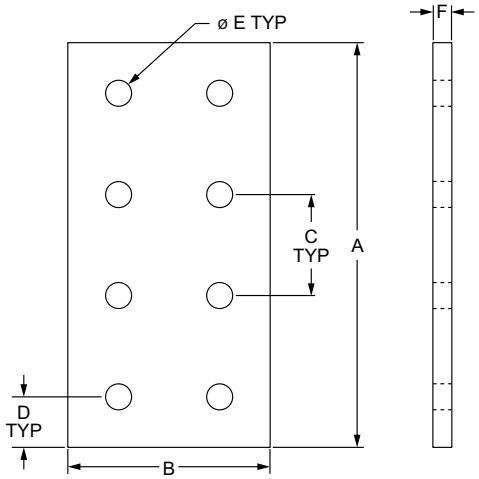

Part No.	Series	Material	Alloy	Finish	A	B	C	D	E	F	Weight
4165	10	Aluminum	6005A – T61	Clear Anodize	4.000"	2.000"	1.000"	.500"	.257"	.188"	.136 lb
4165-Black	10			Black Anodize	4.000"	2.000"	1.000"	.500"	.257"	.188"	.136 lb
4365	15			Clear Anodize	6.000"	3.000"	1.500"	.750"	.328"	.250"	.414 lb
4365-Black	15			Black Anodize	6.000"	3.000"	1.500"	.750"	.328"	.250"	.414 lb
20-4165	20			Clear Anodize	80.00mm	40.00mm	20.00mm	10.00mm	5.56mm	4.00mm	.0324 kg
20-4165-Black	20			Black Anodize	80.00mm	40.00mm	20.00mm	10.00mm	5.56mm	4.00mm	.0324 kg
25-4165	25			Clear Anodize	100.00mm	50.00mm	25.00mm	12.50mm	6.30mm	4.00mm	.0494 kg
25-4165-Black	25			Black Anodize	100.00mm	50.00mm	25.00mm	12.50mm	6.30mm	4.00mm	.0494 kg
30-4365	30			Clear Anodize	120.00mm	60.00mm	30.00mm	15.00mm	6.81mm	4.00mm	.0744 kg
30-4365-Black	30			Black Anodize	120.00mm	60.00mm	30.00mm	15.00mm	6.81mm	4.00mm	.0744 kg
40-4365	40			Clear Anodize	160.00mm	80.00mm	40.00mm	20.00mm	8.30mm	6.00mm	.1919 kg
40-4365-Black	40			Black Anodize	160.00mm	80.00mm	40.00mm	20.00mm	8.30mm	6.00mm	.1919 kg
45-4365	45			Clear Anodize	180.00mm	90.00mm	45.00mm	22.50mm	8.33mm	6.00mm	.2546 kg
45-4365-Black	45			Black Anodize	180.00mm	90.00mm	45.00mm	22.50mm	8.33mm	6.00mm	.2546 kg

Suggested Hardware (Mount to T-Slot)

Part No.	Series	Qty.	Bolt	T-Nut
3321	10	8	1/4-20 x 1/2" FBHSCS	Economy
3320	15	8	5/16-18 x 11/16" FBHSCS	Economy
75-3656	20	8	M5 x 10mm BHSCS	Economy
75-3404	25	8	M6 x 10mm BHSCS	Economy
75-3600	30	8	M6 x 12mm BHSCS	Drop-in
75-3422	40	8	M8 x 16mm BHSCS	Economy
75-3619	45	8	M8 x 18mm BHSCS	Drop-in

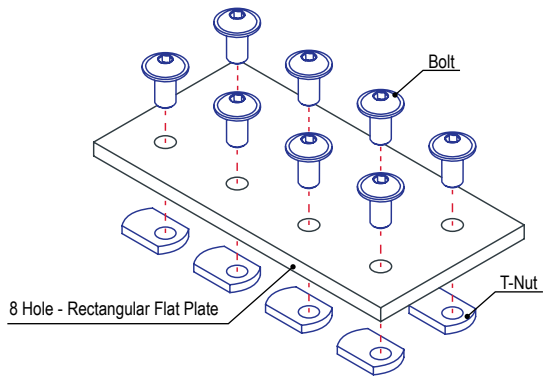

External Fasteners

2 Hole - Straight Transition Flat Plate

- No machining required
- Pre-load to simplify assembly
- Connects 10 to 15 series or 25 to 40 profiles
- Reconfigurable, reusable

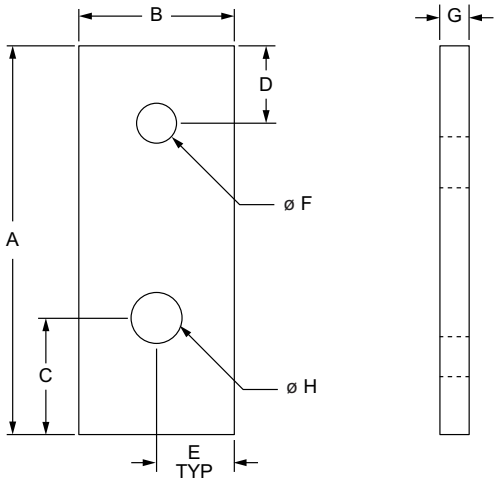

Part No.	Series	Material	Alloy	Finish	A	B	C	D	E	F	G	H	Weight
4510	10 to 15	Aluminum	6005A – T61	Clear Anodize	2.500"	1.000"	.750"	.500"	.500"	.257"	.188"	.328"	.043 lb
4510-Black				Black Anodize	2.500"	1.000"	.750"	.500"	.500"	.257"	.188"	.328"	.043 lb
65-4510	25 to 40			Clear Anodize	65.00mm	25.00mm	20.00mm	12.50mm	12.50mm	6.30mm	4.00mm	8.30mm	.0158 kg
65-4510-Black				Black Anodize	65.00mm	25.00mm	20.00mm	12.50mm	12.50mm	6.30mm	4.00mm	8.30mm	.0163 kg

Suggested Hardware (Mount to T-Slot)

Part No.	Series	Qty.	Bolt	T-Nut
3321	10 to 15	1	1/4-20 x 1/2" FBHSCS	Economy
3435		1	5/16-18 x 5/8" BHSCS, Washer	Economy
75-3404	25 to 40	1	M6 x 10mm BHSCS	Economy
75-3422		1	M8 x 16mm BHSCS	Economy

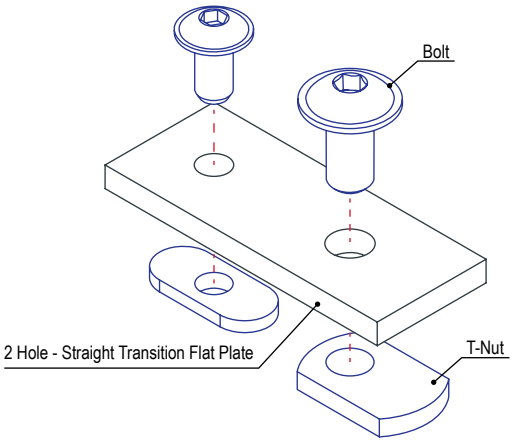

80/20 BUILD YOUR IDEA
More on 80/20® products available at 8020.net

2 Hole - Straight Transition Flat Plate with Flush Offset

- No machining required
- Pre-load to simplify assembly
- Connects 10 to 15 series profiles
- Reconfigurable, reusable

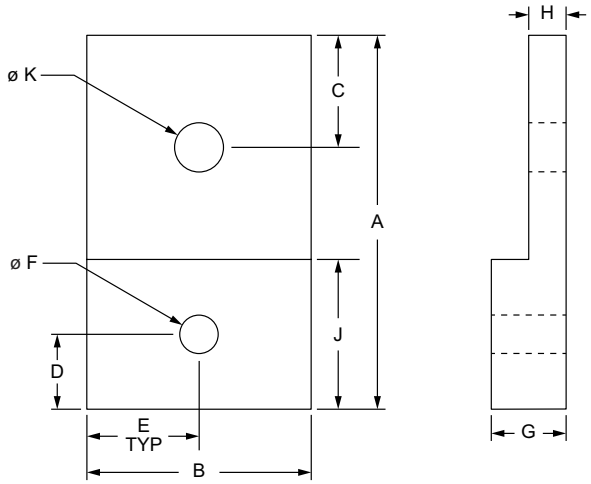

Part No.	Series	Material	Alloy	Finish	A	B	C	D	E	F	G	H	J	K	Weight
4521	10 to 15	Aluminum	6005A – T61	Clear Anodize	2.500"	1.500"	.500"	.250"	.750"	.328"	.500"	.250"	1.000"	.257"	.122 lb
4521-Black				Black Anodize	2.500"	1.500"	.500"	.250"	.750"	.328"	.500"	.250"	1.000"	.257"	.122 lb

Suggested Hardware (Mount to T-Slot)

Part No.	Series	Qty.	Bolt	T-Nut
3384	10 to 15	1	1/4-20 x 3/4" FBHSCS	Economy
3320		1	5/16-18 x11/16" FBHSCS	Economy

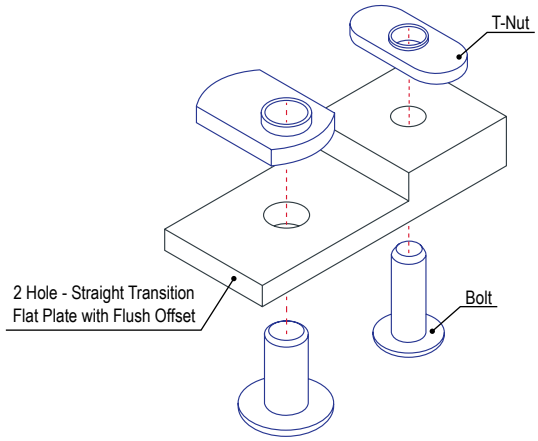

External Fasteners

2 Hole - Straight Slotted Transition Flat Plate with Flush Offset

- No machining required
- Pre-load to simplify assembly
- Connects 10 to 15 series profiles
- Slotted holes allow for added degree of adjustability

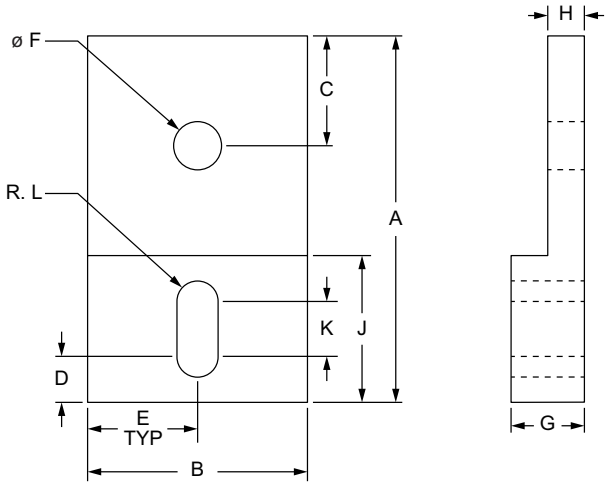

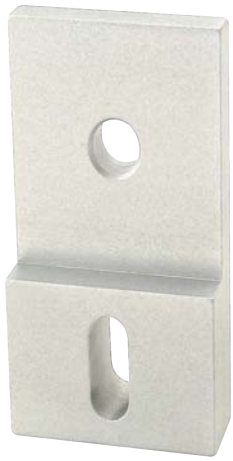

Part No.	Series	Material	Alloy	Finish	A	B	C	D	E	F	G	H	J	K	L	Weight
4522	10 to 15	Aluminum	6005A – T61	Clear Anodize	2.500"	1.500"	.750"	.312"	.750"	.328"	.500"	.250"	1.000"	.375"	.141"	.117 lb
4522-Black				Black Anodize	2.500"	1.500"	.750"	.312"	.750"	.328"	.500"	.250"	1.000"	.375"	.141"	.117 lb

Suggested Hardware (Mount to T-Slot)

Part No.	Series	Qty.	Bolt	T-Nut
3384	10 to 15	1	1/4-20 x 3/4" FBHSCS	Economy
3320		1	5/16-18 x11/16" FBHSCS	Economy

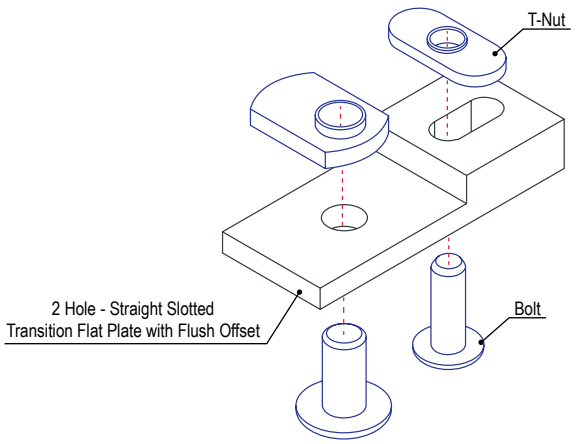

80/20 BUILD YOUR IDEA
More on 80/20® products available at 8020.net

3 Hole - Straight Transition Flat Plate Small Series Primary

- No machining required
- Pre-load to simplify assembly
- Connects 10 to 15 series or 25 to 40 profiles
- Reconfigurable, reusable

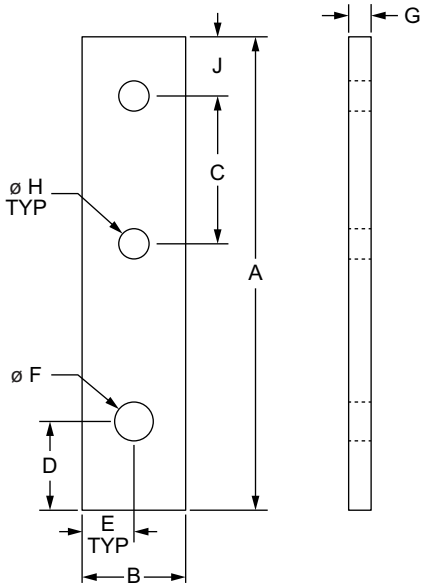

Part No.	Series	Material	Alloy	Finish	A	B	C	D	E	F	G	H (Qty.)	J	Weight
4506	10 to 15	Aluminum	6005A – T61	Clear Anodize	4.000"	.875"	1.250"	.750"	.438"	.328"	.250"	.257" (2)	.500"	.078 lb
4506-Black				Black Anodize	4.000"	.875"	1.250"	.750"	.438"	.328"	.250"	.257" (2)	.500"	.078 lb
65-4506	25 to 40			Clear Anodize	90.00mm	22.00mm	25.50mm	20.00mm	11.00mm	8.30mm	6.00mm	6.30mm (2)	12.00mm	.0290 kg
65-4506-Black				Black Anodize	90.00mm	22.00mm	25.50mm	20.00mm	11.00mm	8.30mm	6.00mm	6.30mm (2)	12.00mm	.0290 kg

Suggested Hardware (Mount to T-Slot)

Part No.	Series	Qty.	Bolt	T-Nut
3321	10 to 15	2	1/4-20 x 1/2" FBHSCS	Economy
3320		1	5/16-18 x 11/16" FBHSCS	Economy
75-3405	25 to 40	2	M6 x 12mm BHSCS	Economy
75-3422		1	M8 x 16mm BHSCS	Economy

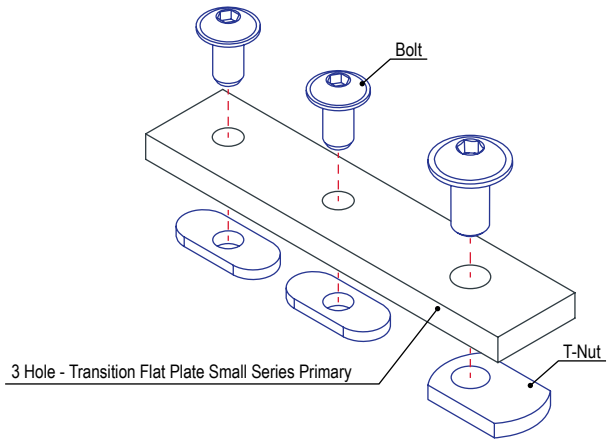

External Fasteners

3 Hole - Straight Transition Flat Plate Large Series Primary

- No machining required
- Pre-load to simplify assembly
- Connects 10 to 15 series or 25 to 40 profiles
- Reconfigurable, reusable

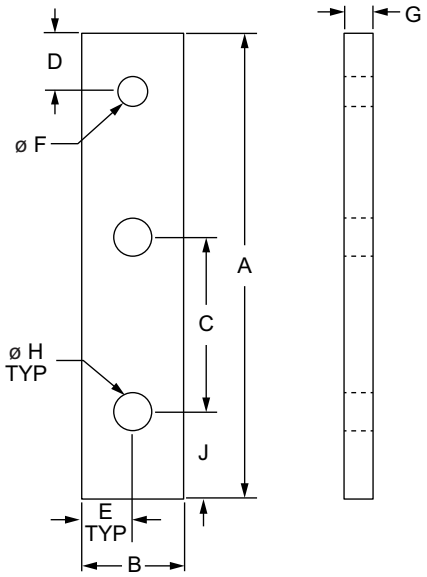

Part No.	Series	Material	Alloy	Finish	A	B	C	D	E	F	G	H (Qty.)	J	Weight
4505	10 to 15	Aluminum	6005A – T61	Clear Anodize	4.000"	.875"	1.500"	.500"	.438"	.257"	.250"	.328" (2)	.750"	.078 lb
4505-Black				Black Anodize	4.000"	.875"	1.500"	.500"	.438"	.257"	.250"	.328" (2)	.750"	.078 lb
65-4505	25 to 40			Clear Anodize	105.00mm	22.00mm	40.00mm	12.50mm	11.00mm	6.30mm	6.00mm	8.30mm (2)	20.00mm	.0331 kg
65-4505-Black				Black Anodize	105.00mm	22.00mm	40.00mm	12.50mm	11.00mm	6.30mm	6.00mm	8.30mm (2)	20.00mm	.0331 kg

Suggested Hardware (Mount to T-Slot)

Part No.	Series	Qty.	Bolt	T-Nut
3321	10 to 15	1	1/4-20 x 1/2" FBHSCS	Economy
3320		2	5/16-18 x 11/16" FBHSCS	Economy
75-3405	25 to 40	1	M6 x 12mm BHSCS	Economy
75-3422		2	M8 x 16mm BHSCS	Economy

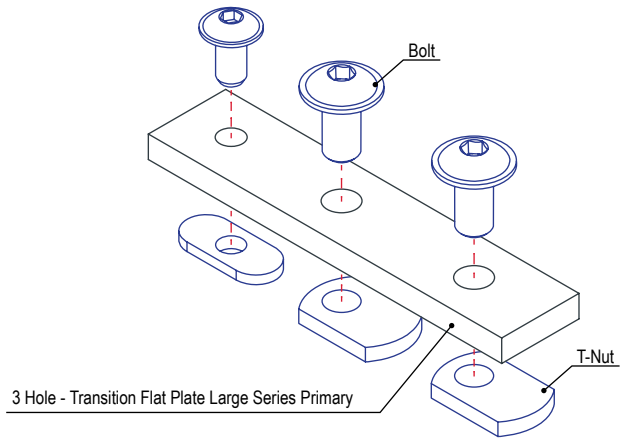

80/20 BUILD YOUR IDEA
More on 80/20® products available at 8020.net

4 Hole - Straight Transition Flat Plate

- No machining required
- Pre-load to simplify assembly
- Connects 10 to 15 series profiles
- Reconfigurable, reusable

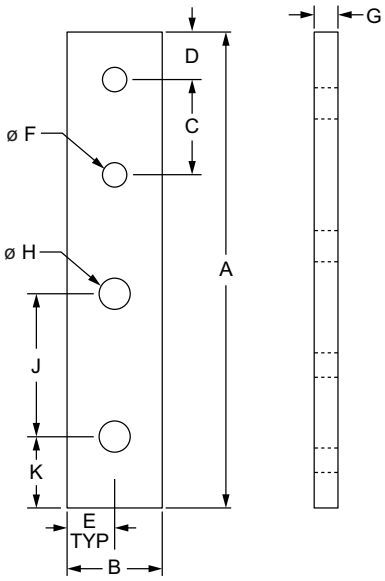

Part No.	Series	Material	Alloy	Finish	A	B	C	D	E	F (Qty.)	G	H (Qty.)	J	K	Weight
4514	10 to 15	Aluminum	6005A – T61	Clear Anodize	5.000"	1.000"	1.000"	.500"	.500"	.257" (2)	.250"	.328" (2)	1.500"	.750"	.114 lb
4514-Black				Black Anodize	5.000"	1.000"	1.000"	.500"	.500"	.257" (2)	.250"	.328" (2)	1.500"	.750"	.114 lb

Suggested Hardware (Mount to T-Slot)

Part No.	Series	Qty.	Bolt	T-Nut
3321	10 to 15	2	1/4-20 x 1/2" FBHSCS	Economy
3320		2	5/16-18 x 11/16" FBHSCS	Economy

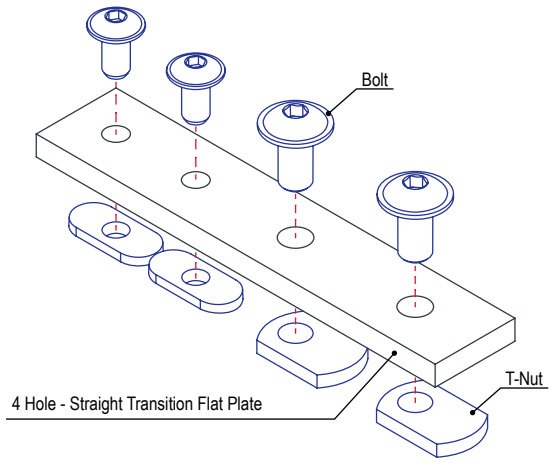

External Fasteners

4 Hole - Rectangular Transition Flat Plate

- No machining required
- Pre-load to simplify assembly
- Connects 10 to 15 series or profiles
- Reconfigurable, reusable

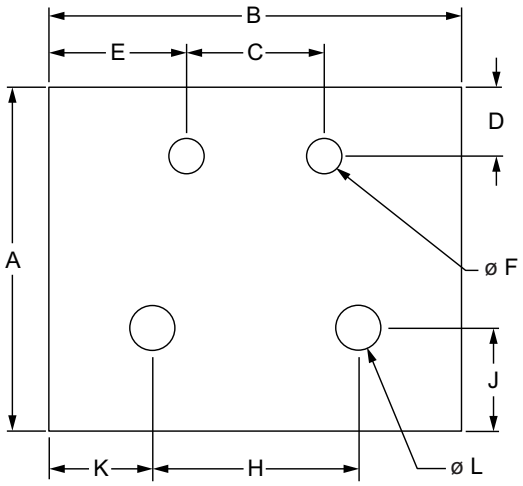

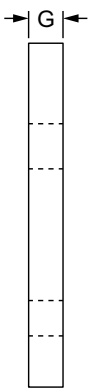

Part No.	Series	Material	Alloy	Finish	A	B	C	D	E	F (Qty.)	G	H	J	K	L (Qty.)	Weight
4515	10 to 15	Aluminum	6005A – T61	Clear Anodize	2.500"	3.000"	1.000"	.500"	1.000"	.257" (2)	.250"	1.500"	.750"	.750"	.328" (2)	.173 lb
4515-Black				Black Anodize	2.500"	3.000"	1.000"	.500"	1.000"	.257" (2)	.250"	1.500"	.750"	.750"	.328" (2)	.173 lb

Suggested Hardware (Mount to T-Slot)

Part No.	Series	Qty.	Bolt	T-Nut
3321	10 to 15	2	1/4-20 x 1/2" FBHSCS	Economy
3320		2	5/16-18 x 11/16" FBHSCS	Economy

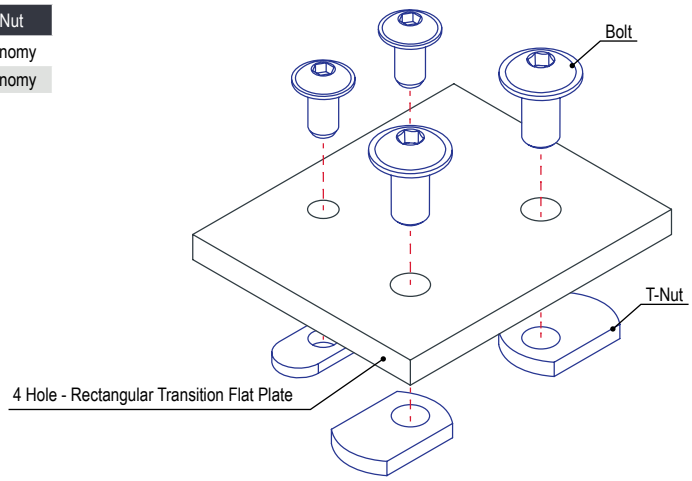

80/20 BUILD YOUR IDEA
More on 80/20® products available at 8020.net

4 Hole - Rectangular Transition Flat Plate with Flush Offset

- No machining required
- Pre-load to simplify assembly
- Connects 10 to 15 series or profiles
- Reconfigurable, reusable

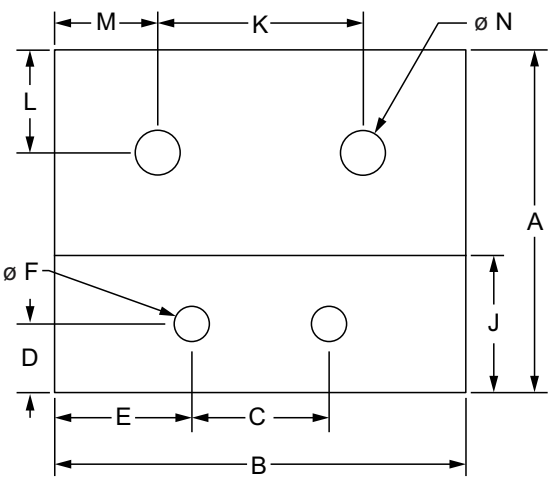

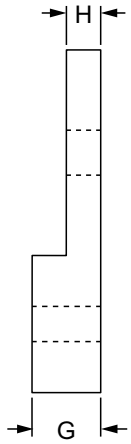

Part No.	Series	Material	Alloy	Finish	A	B	C	D	E	F (Qty.)	G	H	J	K	L	M	N	Weight
4523	10 to 15	Aluminum	6005A – T61	Clear Anodize	2.500"	3.000"	1.000"	.500"	1.000"	.257" (2)	.500"	.250"	1.000"	1.500"	.750"	.750"	.328"	.243 lb
4523-Black				Black Anodize	2.500"	3.000"	1.000"	.500"	1.000"	.257" (2)	.500"	.250"	1.000"	1.500"	.750"	.750"	.328"	.243 lb

Suggested Hardware (Mount to T-Slot)

Part No.	Series	Qty.	Bolt	T-Nut
3384	10 to 15	2	1/4-20 x 3/4" FBHSCS	Economy
3320		2	5/16-18 x 11/16" FBHSCS	Economy

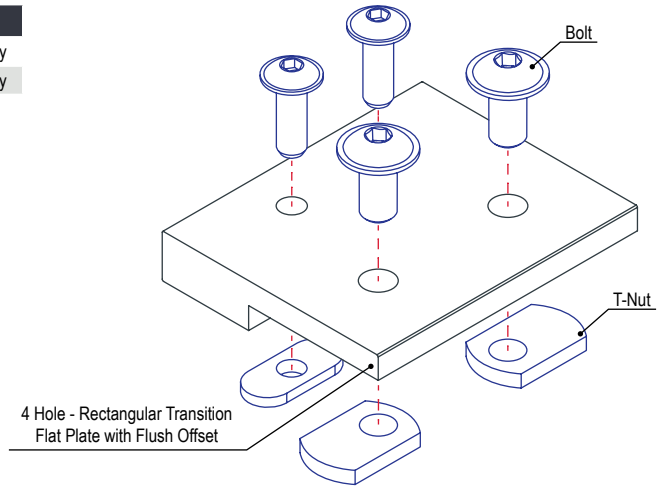

External Fasteners

4 Hole - Rectangular Slotted Transition Flat Plate with Flush Offset

- No machining required
- Pre-load to simplify assembly
- Connects 10 to 15 series or profiles
- Slotted holes allow for added degree of adjustability

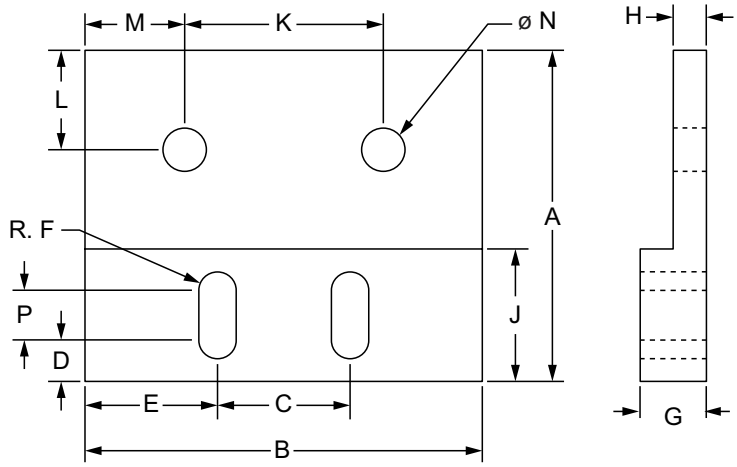

Part No.	Series	Material	Alloy	Finish	A	B	C	D	E	F (Qty.)	G	H	J	K	L	M	N (Qty.)	P	Weight
4524	10 to 15	Aluminum	6005A – T61	Clear	2.500"	3.000"	1.000"	.312"	1.000"	.141" (2)	.500"	.250"	1.000"	1.500"	.750"	.750"	.328" (2)	.375"	.239 lb
4524-Black				Black	2.500"	3.000"	1.000"	.312"	1.000"	.141" (2)	.500"	.250"	1.000"	1.500"	.750"	.750"	.328" (2)	.375"	.239 lb

Suggested Hardware (Mount to T-Slot)

Part No.	Series	Qty.	Bolt	T-Nut
3384	10 to 15	2	1/4-20 x 3/4" FBHSCS	Economy
3320		2	5/16-18 x 11/16" FBHSCS	Economy

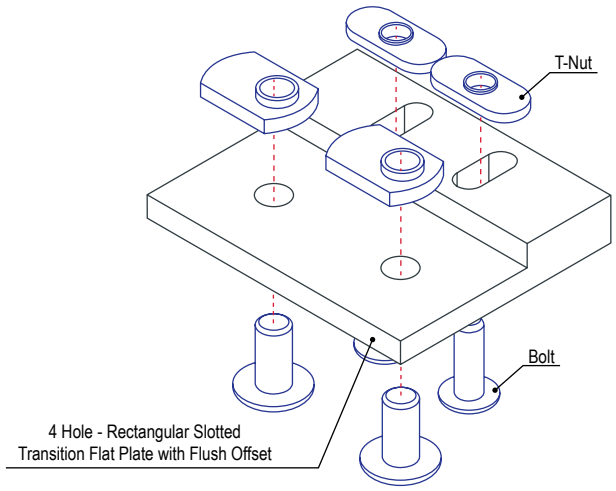

80/20 BUILD YOUR IDEA
More on 80/20® products available at 8020.net

6 Hole - Rectangular Transition Flat Plate Small Series Primary

- No machining required
- Pre-load to simplify assembly
- Connects 10 to 15 series or profiles
- Reconfigurable, reusable

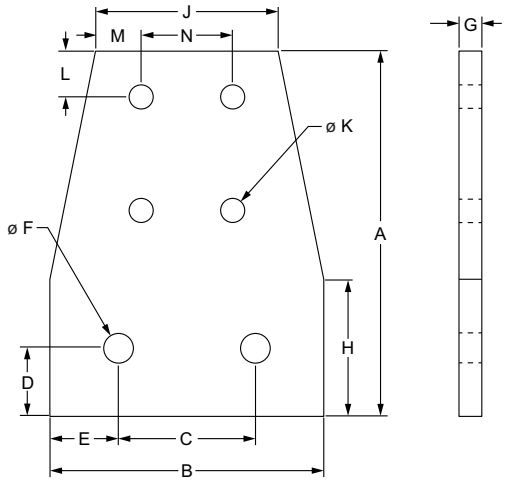

Part No.	Series	Material	Alloy	Finish	A	B	C	D	E	F (Qty.)	G	H	J	K (Qty.)	L	M	N	Weight
4519	10 to 15	Aluminum	6005A – T61	Clear	4.000"	3.000"	1.500"	.750"	.750"	.328" (2)	.250"	1.500"	2.000"	.257" (4)	.500"	.500"	1.000"	.250 lb
4519-Black				Black	4.000"	3.000"	1.500"	.750"	.750"	.328" (2)	.250"	1.500"	2.000"	.257" (4)	.500"	.500"	1.000"	.250 lb

Suggested Hardware (Mount to T-Slot)

Part No.	Series	Qty.	Bolt	T-Nut
3321	10 to 15	4	1/4-20 x 1/2" FBHSCS	Economy
3320		2	5/16-18 x 11/16" FBHSCS	Economy

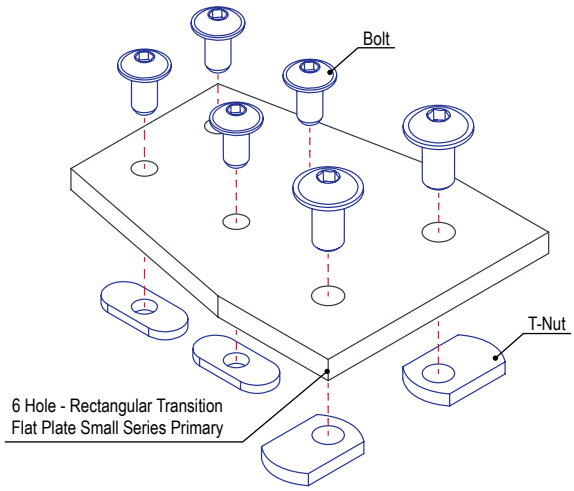

External Fasteners

6 Hole - Rectangular Transition Flat Plate Large Series Primary

- No machining required
- Pre-load to simplify assembly
- Connects 10 to 15 series or profiles
- Reconfigurable, reusable

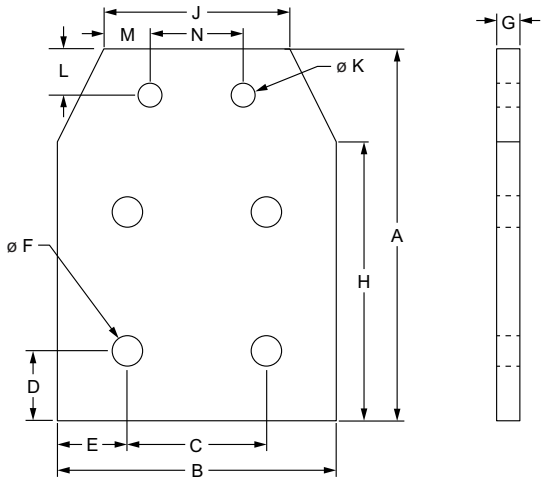

Part No.	Series	Material	Alloy	Finish	A	B	C	D	E	F (Qty.)	G	H	J	K (Qty.)	L	M	N	Weight
4520	10 to 15	Aluminum	6005A – T61	Clear	4.000"	3.000"	1.500"	.750"	.750"	.328" (4)	.250"	3.000"	2.000"	.257" (2)	.500"	.500"	1.000"	.264 lb
4520-Black				Black	4.000"	3.000"	1.500"	.750"	.750"	.328" (4)	.250"	3.000"	2.000"	.257" (2)	.500"	.500"	1.000"	.264 lb

Suggested Hardware (Mount to T-Slot)

Part No.	Series	Qty.	Bolt	T-Nut
3321	10 to 15	2	1/4-20 x 1/2" FBHSCS	Economy
3320		4	5/16-18 x 11/16" FBHSCS	Economy

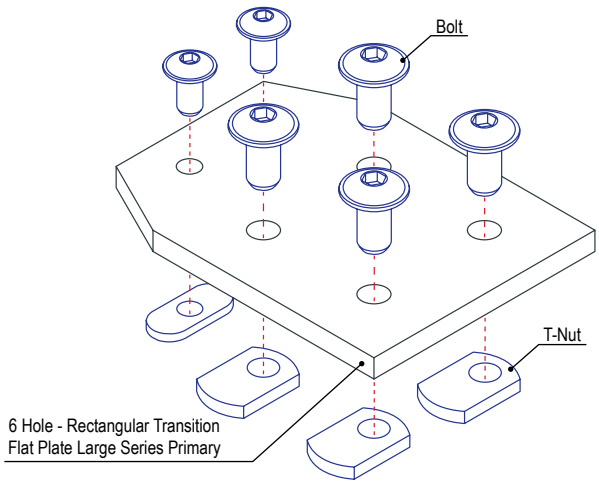

80/20 BUILD YOUR IDEA
More on 80/20® products available at 8020.net

8 Hole - Rectangular Transition Flat Plate

- No machining required
- Pre-load to simplify assembly
- Connects 10 to 15 series or profiles
- Reconfigurable, reusable

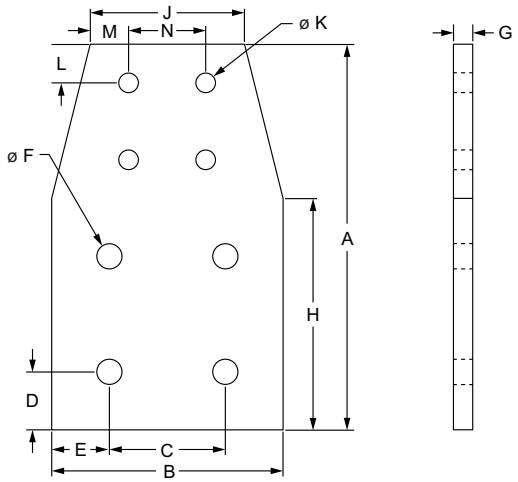

Part No.	Series	Material	Alloy	Finish	A	B	C	D	E	F (Qty.)	G	H	J	K (Qty.)	L	M	N	Weight
4518	10 to 15	Aluminum	6005A – T61	Clear	5.000"	3.000"	1.500"	.750"	.750"	.328" (4)	.250"	3.000"	2.000"	.257" (4)	.500"	.500"	1.000"	.327 lb
4518-Black				Black	5.000"	3.000"	1.500"	.750"	.750"	.328" (4)	.250"	3.000"	2.000"	.257" (4)	.500"	.500"	1.000"	.327 lb

Suggested Hardware (Mount to T-Slot)

Part No.	Series	Qty.	Bolt	T-Nut
3321	10 to 15	4	1/4-20 x 1/2" FBHSCS	Economy
3320		4	5/16-18 x 11/16" FBHSCS	Economy

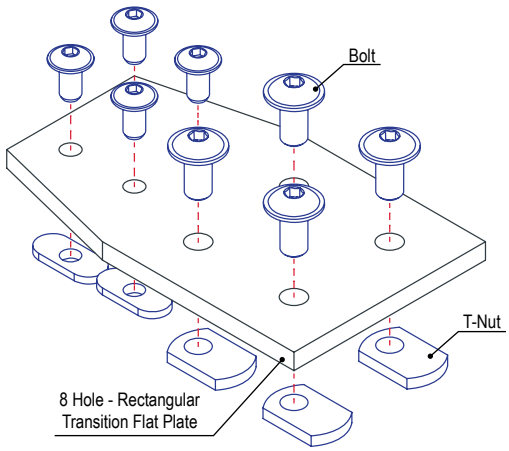

External Fasteners

4 Hole - 90 Degree Angled Flat Plate

- No machining required
- Pre-load to simplify assembly
- Reconfigurable, reusable

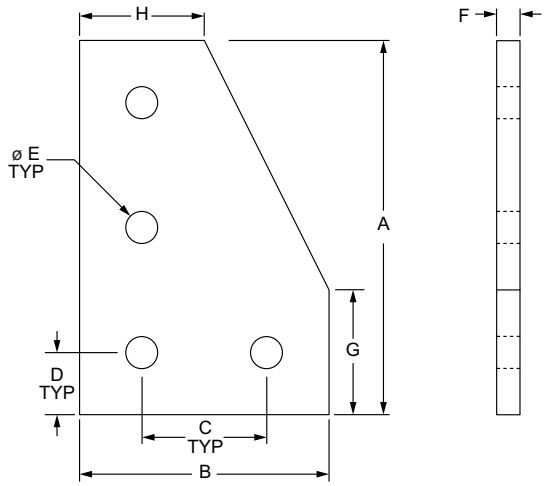

Part No.	Series	Material	Alloy	Finish	A	B	C	D	E	F	G	H	Weight
4150	10	Aluminum	6005A – T61	Clear Anodize	3.000"	2.000"	1.000"	.500"	.257"	.188"	1.000"	1.000"	.087 lb
4150-Black	10			Black Anodize	3.000"	2.000"	1.000"	.500"	.257"	.188"	1.000"	1.000"	.087 lb
4350	15 RT			Clear Anodize	4.500"	3.000"	1.500"	.750"	.328"	.250"	1.500"	1.500"	.264 lb
4350-Black	15 RT			Black Anodize	4.500"	3.000"	1.500"	.750"	.328"	.250"	1.500"	1.500"	.264 lb
25-4150	25			Clear Anodize	75.00mm	50.00mm	25.00mm	12.50mm	6.20mm	4.00mm	25.00mm	25.00mm	.0318 kg
25-4150-Black	25			Black Anodize	75.00mm	50.00mm	25.00mm	12.50mm	6.20mm	4.00mm	25.00mm	25.00mm	.0318 kg
40-4350	40			Clear Anodize	120.00mm	80.00mm	40.00mm	20.00mm	8.30mm	6.00mm	40.00mm	40.00mm	.1207 kg
40-4350-Black	40			Black Anodize	120.00mm	80.00mm	40.00mm	20.00mm	8.30mm	6.00mm	40.00mm	40.00mm	.1207 kg

Suggested Hardware (Mount to T-Slot)

Part No.	Series	Qty.	Bolt	T-Nut
3321	10	4	1/4-20 x 1/2" FBHSCS	Economy
3320	15	4	5/16-18 x 11/16" FBHSCS	Economy
75-3404	25	4	M6 x 10mm BHSCS	Economy
75-3422	40	4	M8 x 16mm BHSCS	Economy

Suggested Hardware (Mount to Ready Tube)

Part No.	Series	Qty.	Bolt Assembly
3960	RT	4	5/16-18 x 2.00" Flange Hex Head Bolt w/ Flanged Hex Nut

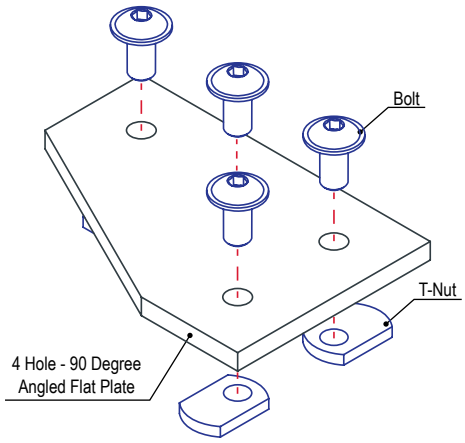

80/20 BUILD YOUR IDEA
More on 80/20® products available at 8020.net

5 Hole - 90 Degree Angled Flat Plate

- No machining required
- Pre-load to simplify assembly
- Reconfigurable, reusable

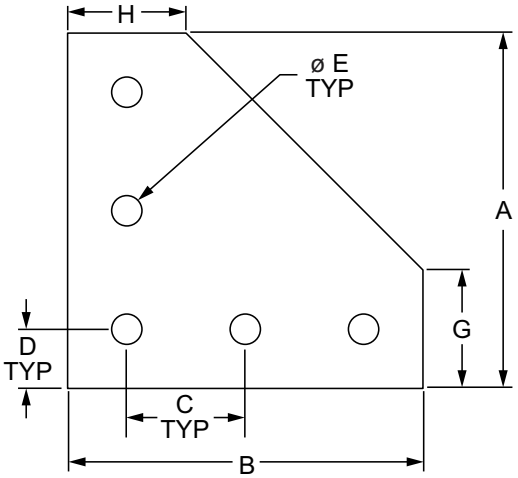

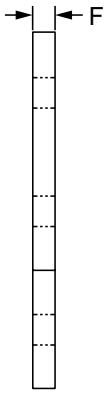

Part No.	Series	Material	Alloy	Finish	A	B	C	D	E	F	G	H	Weight
4151	10	Aluminum	6005A – T61	Clear Anodize	3.000"	3.000"	1.000"	.500"	.257"	.188"	1.000"	1.000"	.119 lb
4151-Black	10			Black Anodize	3.000"	3.000"	1.000"	.500"	.257"	.188"	1.000"	1.000"	.119 lb
4351	15 RT			Clear Anodize	4.500"	4.500"	1.500"	.750"	.328"	.250"	1.500"	1.500"	.363 lb
4351-Black	15 RT			Black Anodize	4.500"	4.500"	1.500"	.750"	.328"	.250"	1.500"	1.500"	.363 lb
25-4151	25			Clear Anodize	75.00mm	75.00mm	25.00mm	12.50mm	6.30mm	4.00mm	25.00mm	25.00mm	.0454 kg
25-4151-Black	25			Black Anodize	75.00mm	75.00mm	25.00mm	12.50mm	6.30mm	4.00mm	25.00mm	25.00mm	.0454 kg
30-4351	30			Clear Anodize	90.00mm	90.00mm	30.00mm	15.00mm	6.30mm	4.00mm	30.00mm	30.00mm	.0644 kg
30-4351-Black	30			Black Anodize	90.00mm	90.00mm	30.00mm	15.00mm	6.30mm	4.00mm	30.00mm	30.00mm	.0644 kg
40-4351	40			Clear Anodize	120.00mm	120.00mm	40.00mm	20.00mm	8.30mm	6.00mm	40.00mm	40.00mm	.1719 kg
40-4351-Black	40			Black Anodize	120.00mm	120.00mm	40.00mm	20.00mm	8.30mm	6.00mm	40.00mm	40.00mm	.1719 kg
45-4351	45			Clear Anodize	135.00mm	135.00mm	45.00mm	22.50mm	8.30mm	6.00mm	45.00mm	45.00mm	.2214 kg
45-4351-Black	45			Black Anodize	135.00mm	135.00mm	45.00mm	22.50mm	8.30mm	6.00mm	45.00mm	45.00mm	.2214 kg

Suggested Hardware (Mount to T-Slot)

Part No.	Series	Qty.	Bolt	T-Nut
3321	10	5	1/4-20 x 1/2" FBHSCS	Economy
3320	15	5	5/16-18 x 11/16" FBHSCS	Economy
75-3404	25	5	M6 x 10mm BHSCS	Economy
75-3600	30	5	M6 x 12mm BHSCS	Drop-In
75-3422	40	5	M8 x 16mm BHSCS	Economy
75-3619	45	5	M8 x 18mm BHSCS	Drop-In

Suggested Hardware (Mount to Ready Tube)

Part No.	Series	Qty.	Bolt Assembly
3960	RT	5	5/16-18 x 2.00" Flange Hex Head Bolt w/ Flanged Hex Nut

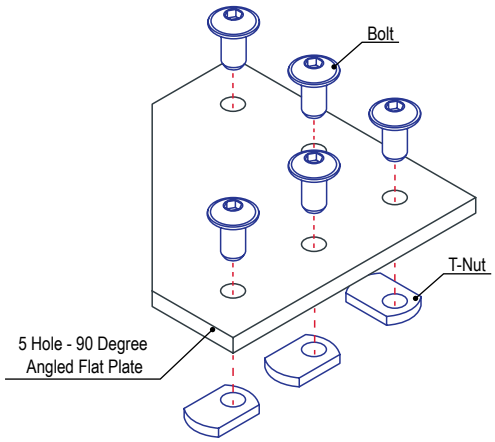

External Fasteners

6 Hole - 90 Degree Angled Stacked Flat Plate

- No machining required
- Pre-load to simplify assembly
- Reconfigurable, reusable

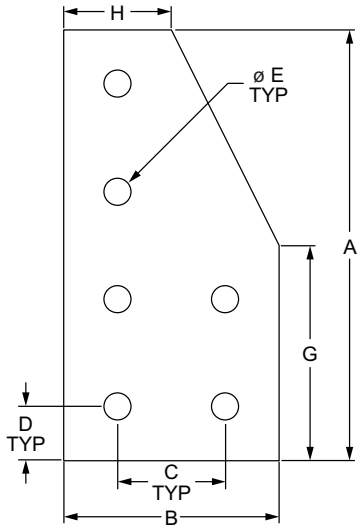

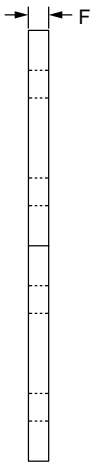

Part No.	Series	Material	Alloy	Finish	A	B	C	D	E	F	G	H	Weight
4120	10	Aluminum	6005A – T61	Clear Anodize	4.000"	2.000"	1.000"	.500"	.257"	.188"	2.000"	1.000"	.121 lb
4120-Black	10			Black Anodize	4.000"	2.000"	1.000"	.500"	.257"	.188"	2.000"	1.000"	.121 lb
4320	15			Clear Anodize	6.000"	3.000"	1.500"	.750"	.328"	.250"	3.000"	1.500"	.444 lb
4320-Black	15			Black Anodize	6.000"	3.000"	1.500"	.750"	.328"	.250"	3.000"	1.500"	.444 lb
25-4120	25			Clear Anodize	100.00mm	50.00mm	25.00mm	12.50mm	6.30mm	4.00mm	50.00mm	25.00mm	.0440 kg
25-4120-Black	25			Black Anodize	100.00mm	50.00mm	25.00mm	12.50mm	6.30mm	4.00mm	50.00mm	25.00mm	.0440 kg
40-4320	40			Clear Anodize	160.00mm	80.00mm	40.00mm	20.00mm	8.30mm	6.00mm	80.00mm	40.00mm	.1696 kg
40-4320-Black	40			Black Anodize	160.00mm	80.00mm	40.00mm	20.00mm	8.30mm	6.00mm	80.00mm	40.00mm	.1696 kg

Suggested Hardware (Mount to T-Slot)

Part No.	Series	Qty.	Bolt	T-Nut
3321	10	6	1/4-20 x 1/2" FBHSCS	Economy
3320	15	6	5/16-18 x 11/16" FBHSCS	Economy
75-3404	25	6	M6 x 10mm BHSCS	Economy
75-3422	40	6	M8 x 16mm BHSCS	Economy

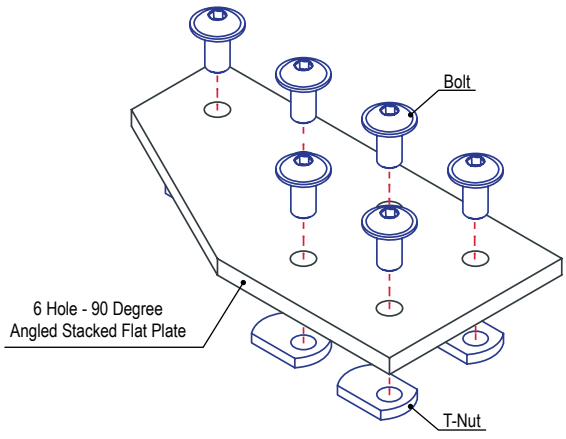

80/20 BUILD YOUR IDEA
More on 80/20® products
available at 8020.net

6 Hole - 90 Degree Angled Squared Flat Plate

- No machining required
- Pre-load to simplify assembly
- Reconfigurable, reusable

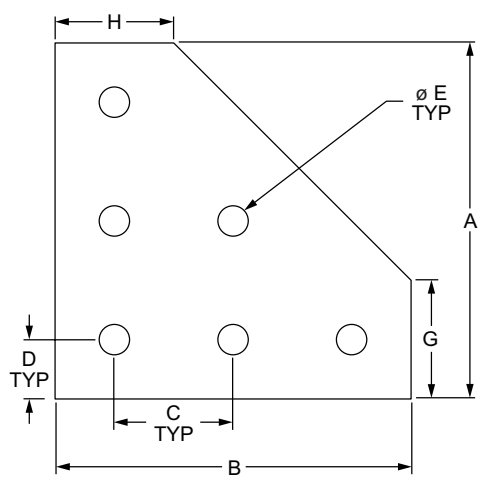

Part No.	Series	Material	Alloy	Finish	A	B	C	D	E	F	G	H	Weight
4061	10	Aluminum	6005A – T61	Clear Anodize	3.000"	3.000"	1.000"	.500"	.257"	.188"	1.000"	1.000"	.117 lb
4061-Black	10			Black Anodize	3.000"	3.000"	1.000"	.500"	.257"	.188"	1.000"	1.000"	.117 lb
4461	15			Clear Anodize	4.500"	4.500"	1.500"	.750"	.328"	.250"	1.500"	1.500"	.361 lb
4461-Black	15			Black Anodize	4.500"	4.500"	1.500"	.750"	.328"	.250"	1.500"	1.500"	.361 lb

Suggested Hardware (Mount to T-Slot)

Part No.	Series	Qty.	Bolt	T-Nut
3321	10	6	1/4-20 x 1/2" FBHSCS	Economy
3320	15	6	5/16-18 x 11/16" FBHSCS	Economy

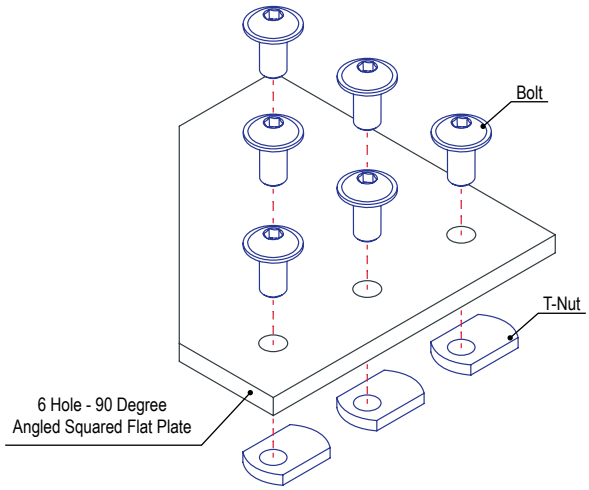

External Fasteners

7 Hole - 90 Degree Angled Squared Flat Plate

- No machining required
- Pre-load to simplify assembly
- Reconfigurable, reusable

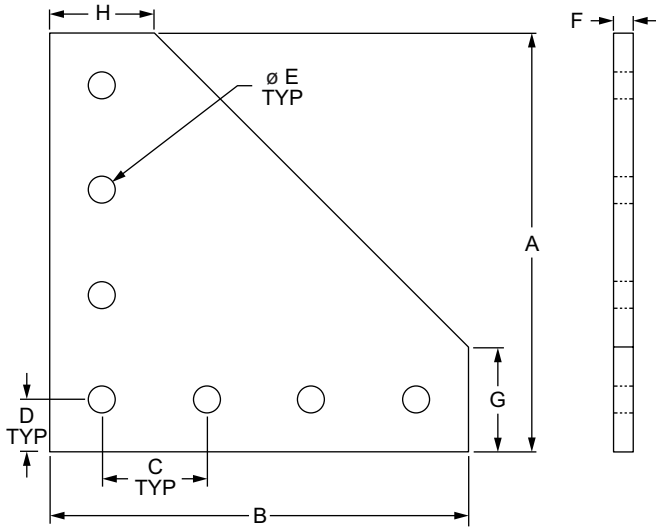

Part No.	Series	Material	Alloy	Finish	A	B	C	D	E	F	G	H	Weight
4152	10	Aluminum	6005A – T61	Clear Anodize	4.000"	4.000"	1.000"	.500"	.257"	.188"	1.000"	1.000"	.199 lb
4152-Black	10			Black Anodize	4.000"	4.000"	1.000"	.500"	.257"	.188"	1.000"	1.000"	.199 lb
4352	15 RT			Clear Anodize	6.000"	6.000"	1.500"	.750"	.328"	.250"	1.500"	1.500"	.622 lb
4352-Black	15 RT			Black Anodize	6.000"	6.000"	1.500"	.750"	.328"	.250"	1.500"	1.500"	.622 lb
25-4152	25			Clear Anodize	100.00mm	100.00mm	25.00mm	12.50mm	6.30mm	4.00mm	25.00mm	25.00mm	.0744 kg
25-4152-Black	25			Black Anodize	100.00mm	100.00mm	25.00mm	12.50mm	6.30mm	4.00mm	25.00mm	25.00mm	.0744 kg
40-4352	40			Clear Anodize	160.00mm	160.00mm	40.00mm	20.00mm	8.30mm	6.00mm	40.00mm	40.00mm	.2886 kg
40-4352-Black	40			Black Anodize	160.00mm	160.00mm	40.00mm	20.00mm	8.30mm	6.00mm	40.00mm	40.00mm	.2886 kg

Suggested Hardware (Mount to T-Slot)

Part No.	Series	Qty.	Bolt	T-Nut
3321	10	7	1/4-20 x 1/2" FBHSCS	Economy
3320	15	7	5/16-18 x 11/16" FBHSCS	Economy
75-3404	25	7	M6 x 10mm BHSCS	Economy
75-3422	40	7	M8 x 16mm BHSCS	Economy

Suggested Hardware (Mount to Ready Tube)

Part No.	Series	Qty.	Bolt Assembly
3960	RT	7	5/16-18 x 2.00" Flange Hex Head Bolt w/ Flanged Hex Nut

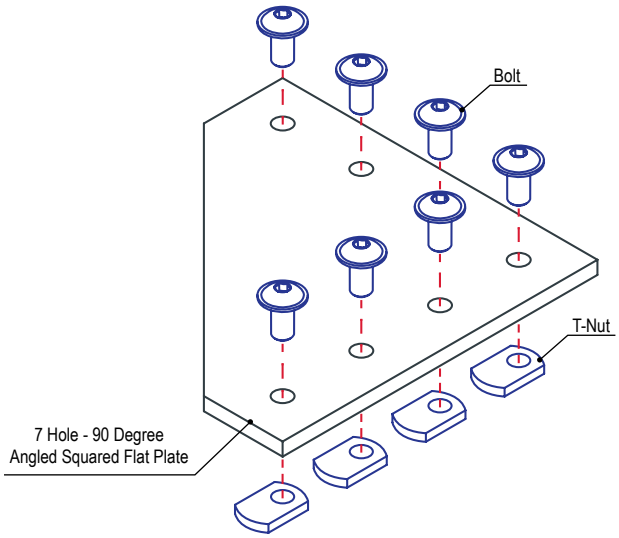

80/20 BUILD YOUR IDEA
More on 80/20® products available at 8020.net

7 Hole - 90 Degree Angled Stacked Flat Plate

- No machining required
- Pre-load to simplify assembly
- Reconfigurable, reusable

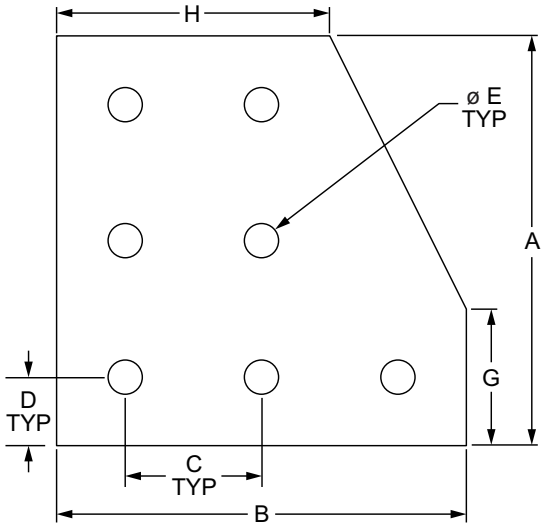

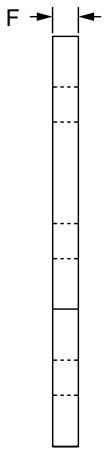

Part No.	Series	Material	Alloy	Finish	A	B	C	D	E	F	G	H	Weight
4129	10	Aluminum	6005A – T61	Clear Anodize	3.000"	3.000"	1.000"	.500"	.257"	.188"	1.000"	2.000"	.133 lb
4129-Black	10			Black Anodize	3.000"	3.000"	1.000"	.500"	.257"	.188"	1.000"	2.000"	.133 lb
4329	15			Clear Anodize	4.500"	4.500"	1.500"	.750"	.328"	.250"	1.500"	3.000"	.414 lb
4329-Black	15			Black Anodize	4.500"	4.500"	1.500"	.750"	.328"	.250"	1.500"	3.000"	.414 lb
25-4129	25			Clear Anodize	75.00mm	75.00mm	25.00mm	12.50mm	6.30mm	4.00mm	25.00mm	50.00mm	.0508 kg
25-4129-Black	25			Black Anodize	75.00mm	75.00mm	25.00mm	12.50mm	6.30mm	4.00mm	25.00mm	50.00mm	.0508 kg
40-4329	40			Clear Anodize	120.00mm	120.00mm	40.00mm	20.00mm	8.30mm	6.00mm	40.00mm	80.00mm	.1960 kg
40-4329-Black	40			Black Anodize	120.00mm	120.00mm	40.00mm	20.00mm	8.30mm	6.00mm	40.00mm	80.00mm	.1960 kg

Suggested Hardware (Mount to T-Slot)

Part No.	Series	Qty.	Bolt	T-Nut
3321	10	7	1/4-20 x 1/2" FBHSCS	Economy
3320	15	7	5/16-18 x 11/16" FBHSCS	Economy
75-3404	25	7	M6 x 10mm BHSCS	Economy
75-3422	40	7	M8 x 16mm BHSCS	Economy

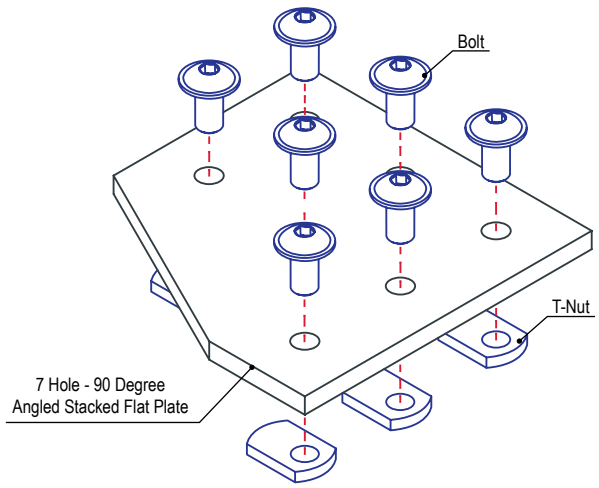

External Fasteners

9 Hole - 90 Degree Angled Flat Plate

- No machining required
- Pre-load to simplify assembly
- Reconfigurable, reusable

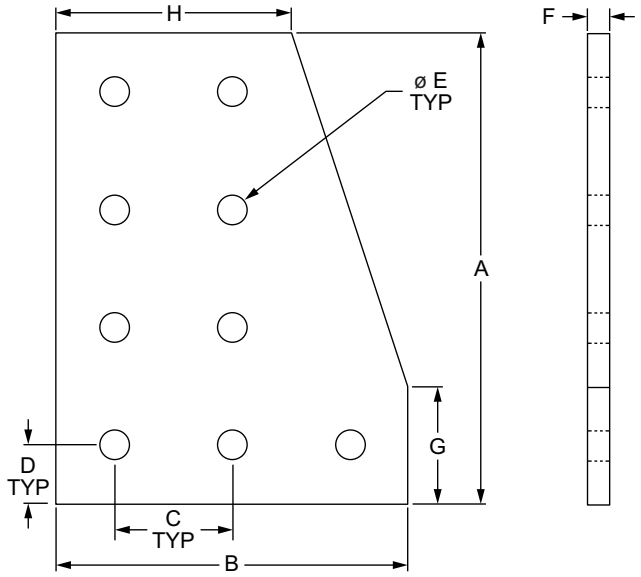

Part No.	Series	Material	Alloy	Finish	A	B	C	D	E	F	G	H	Weight
4126	10	Aluminum	6005A – T61	Clear Anodize	4.000"	3.000"	1.000"	.500"	.257"	.188"	1.000"	2.000"	.176 lb
4126-Black	10			Black Anodize	4.000"	3.000"	1.000"	.500"	.257"	.188"	1.000"	2.000"	.176 lb
4326	15			Clear Anodize	6.000"	4.500"	1.500"	.750"	.328"	.250"	1.500"	3.000"	.546 lb
4326-Black	15			Black Anodize	6.000"	4.500"	1.500"	.750"	.328"	.250"	1.500"	3.000"	.546 lb

Suggested Hardware (Mount to T-Slot)

Part No.	Series	Qty.	Bolt	T-Nut
3321	10	9	1/4-20 x 1/2" FBHSCS	Economy
3320	15	9	5/16-18 x 11/16" FBHSCS	Economy

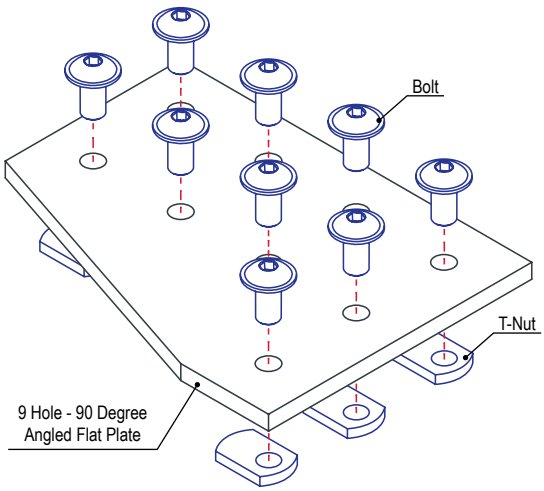

80/20 BUILD YOUR IDEA
More on 80/20® products
available at 8020.net

10 Hole - 90 Degree Angled Flat Plate

- No machining required
- Pre-load to simplify assembly
- Reconfigurable, reusable

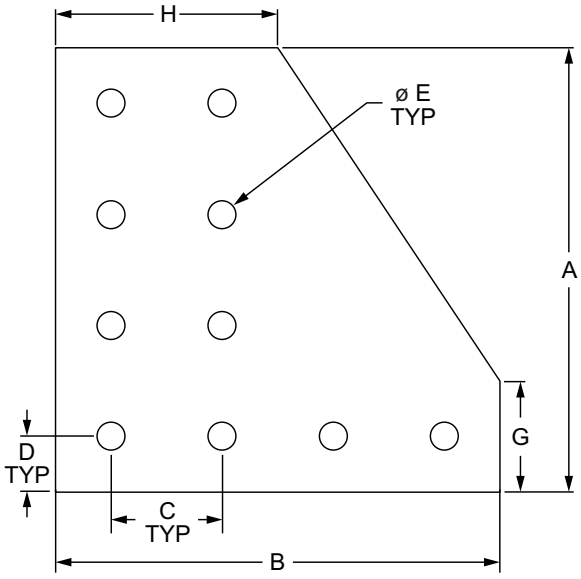

Part No.	Series	Material	Alloy	Finish	A	B	C	D	E	F	G	H	Weight
4127	10	Aluminum	6005A – T61	Clear Anodize	4.000"	4.000"	1.000"	.500"	.257"	.188"	1.000"	2.000"	.222 lb
4127-Black	10			Black Anodize	4.000"	4.000"	1.000"	.500"	.257"	.188"	1.000"	2.000"	.222 lb
4327	15			Clear Anodize	6.000"	6.000"	1.500"	.750"	.328"	.250"	1.500"	3.000"	.688 lb
4327-Black	15			Black Anodize	6.000"	6.000"	1.500"	.750"	.328"	.250"	1.500"	3.000"	.688 lb

Suggested Hardware (Mount to T-Slot)

Part No.	Series	Qty.	Bolt	T-Nut
3321	10	10	1/4-20 x 1/2" FBHSCS	Economy
3320	15	10	5/16-18 x 11/16" FBHSCS	Economy

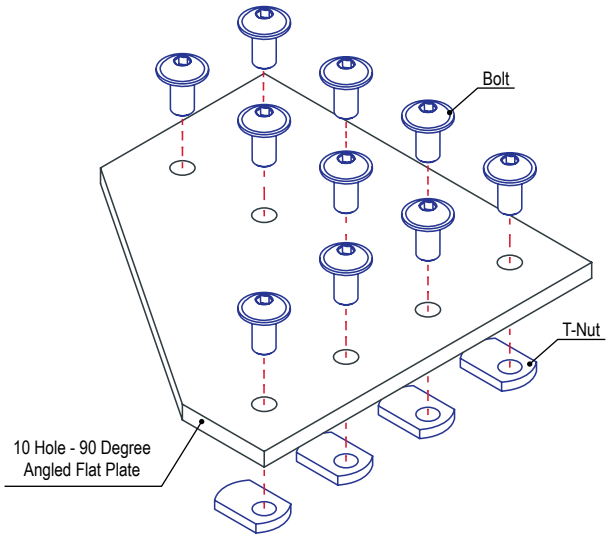

External Fasteners

12 Hole - 90 Degree Angled Flat Plate

- No machining required
- Pre-load to simplify assembly
- Reconfigurable, reusable

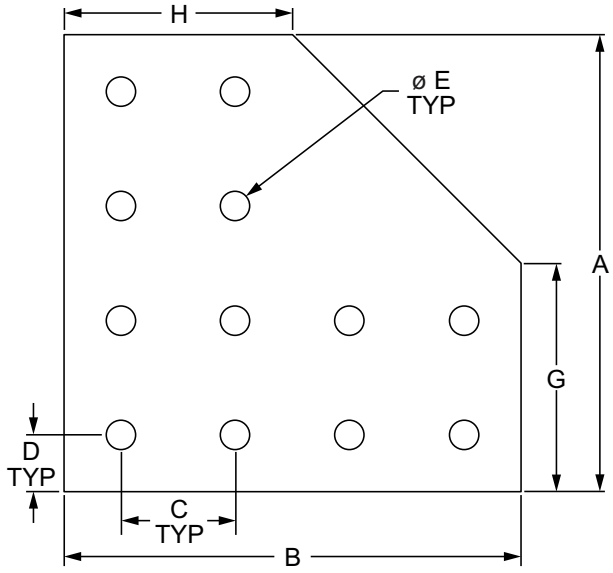

Part No.	Series	Material	Alloy	Finish	A	B	C	D	E	F	G	H	Weight
4128	10	Aluminum	6005A – T61	Clear Anodize	4.000"	4.000"	1.000"	.500"	.257"	.188"	2.000"	2.000"	.244 lb
4128-Black	10			Black Anodize	4.000"	4.000"	1.000"	.500"	.257"	.188"	2.000"	2.000"	.244 lb
4328	15			Clear Anodize	6.000"	6.000"	1.500"	.750"	.328"	.250"	3.000"	3.000"	.752 lb
4328-Black	15			Black Anodize	6.000"	6.000"	1.500"	.750"	.328"	.250"	3.000"	3.000"	.752 lb
25-4128	25			Clear Anodize	100.00mm	100.00mm	25.00mm	12.50mm	6.30mm	4.00mm	50.00mm	50.00mm	.1769 kg
25-4128-Black	25			Black Anodize	100.00mm	100.00mm	25.00mm	12.50mm	6.30mm	4.00mm	50.00mm	50.00mm	.1769 kg
40-4328	40			Clear Anodize	160.00mm	160.00mm	40.00mm	20.00mm	8.30mm	6.00mm	80.00mm	80.00mm	.3483 kg
40-4328-Black	40			Black Anodize	160.00mm	160.00mm	40.00mm	20.00mm	8.30mm	6.00mm	80.00mm	80.00mm	.3483 kg

Suggested Hardware (Mount to T-Slot)

Part No.	Series	Qty.	Bolt	T-Nut
3321	10	12	1/4-20 x 1/2" FBHSCS	Economy
3320	15	12	5/16-18 x 11/16" FBHSCS	Economy
75-3404	25	12	M6 x 10mm BHSCS	Economy
75-3422	40	12	M8 x 16mm BHSCS	Economy

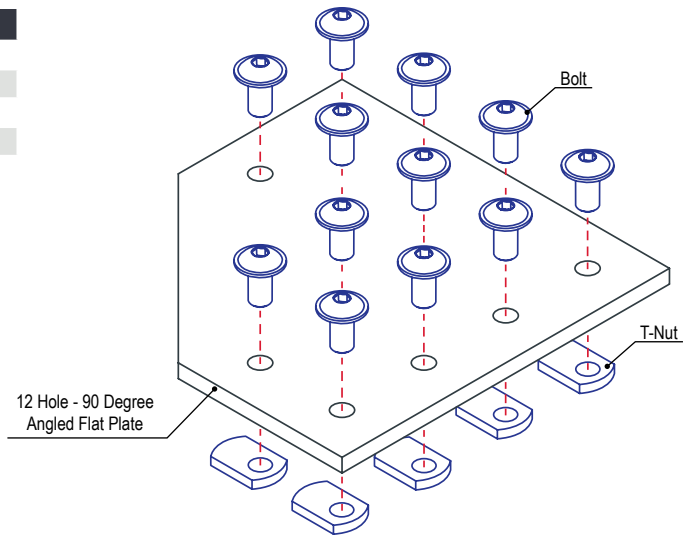

80/20 BUILD YOUR IDEA
More on 80/20® products
available at 8020.net

4 Hole - 15 Degree Angled Flat Plate

- No machining required
- Creates 15 degree angle between profiles
- Pre-load to simplify assembly
- Reconfigurable, reusable

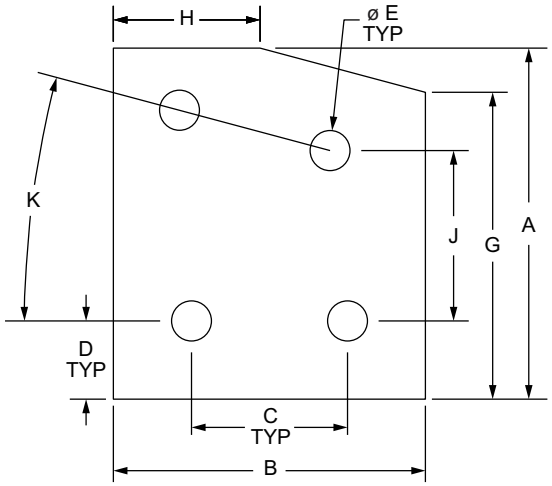

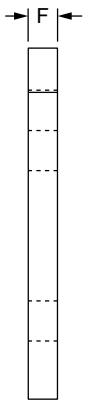

Part No.	Series	Material	Alloy	Finish	A	B	C	D	E	F	G	H	J	K	Weight
4110	10	Aluminum	6005A – T61	Clear Anodize	2.250"	2.000"	1.000"	.500"	.257"	.188"	1.966"	.940"	1.092"	15°	.075 lb
4110-Black	10			Black Anodize	2.250"	2.000"	1.000"	.500"	.257"	.188"	1.966"	.940"	1.092"	15°	.075 lb
4316	15			Clear Anodize	3.500"	3.000"	1.500"	.750"	.328"	.250"	2.949"	.944"	1.617"	15°	.104 lb
4316-Black	15			Black Anodize	3.500"	3.000"	1.500"	.750"	.328"	.250"	2.949"	.944"	1.617"	15°	.104 lb
40-4316	40			Clear Anodize	94.00mm	80.00mm	40.00mm	20.00mm	8.30mm	6.00mm	79.20mm	24.80mm	43.40mm	15°	.1057 kg
40-4316-Black	40			Black Anodize	94.00mm	80.00mm	40.00mm	20.00mm	8.30mm	6.00mm	79.20mm	24.80mm	43.40mm	15°	.1057 kg

Suggested Hardware (Mount to T-Slot)

Part No.	Series	Qty.	Bolt	T-Nut
3321	10	4	1/4-20 x 1/2" FBHSCS	Economy
3320	15	4	5/16-18 x 11/16" FBHSCS	Economy
75-3422	40	4	M8 x 16mm BHSCS	Economy

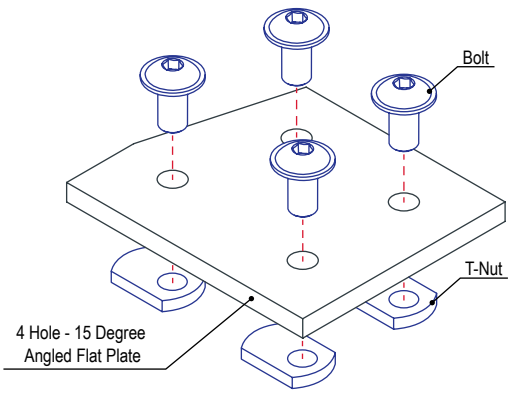

External Fasteners

6 Hole - 15 Degree Angled Flat Plate

- No machining required
- Creates 15 degree angle between profiles
- Pre-load to simplify assembly
- Reconfigurable, reusable

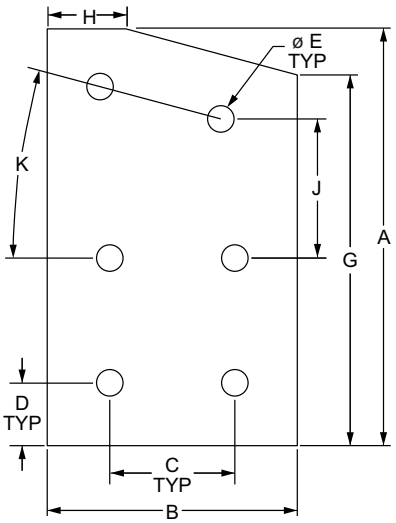

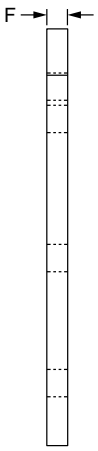

Part No.	Series	Material	Alloy	Finish	A	B	C	D	E	F	G	H	J	K	Weight
4315	15	Aluminum	6005A – T61	Clear Anodize	5.000"	3.000"	1.500"	.750"	.328"	.250"	4.307"	2.056"	1.669"	15°	.336 lb
4315-Black	15			Black Anodize	5.000"	3.000"	1.500"	.750"	.328"	.250"	4.307"	2.056"	1.669"	15°	.336 lb

Suggested Hardware (Mount to T-Slot)

Part No.	Series	Qty.	Bolt	T-Nut
3320	15	6	5/16-18 x 11/16" FBHSCS	Economy

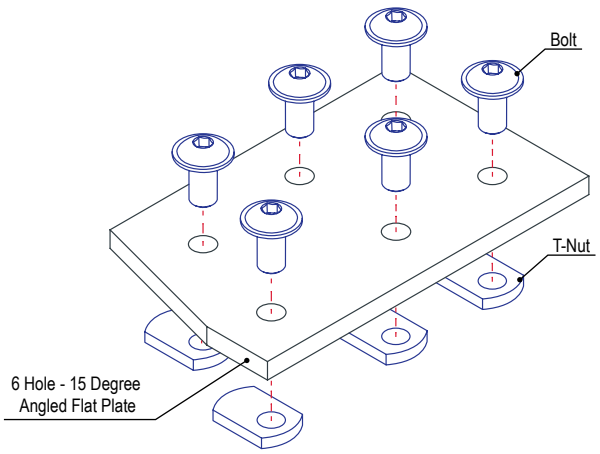

80/20 BUILD YOUR IDEA
More on 80/20® products
available at 8020.net

4 Hole - 30 Degree Angled Flat Plate

- No machining required
- Creates 30 degree angle between profiles
- Pre-load to simplify assembly
- Reconfigurable, reusable

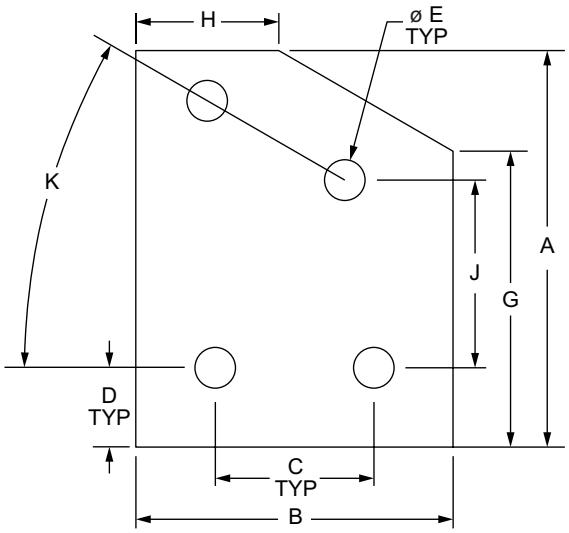

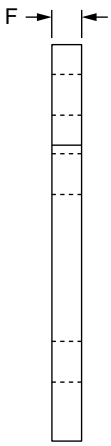

Part No.	Series	Material	Alloy	Finish	A	B	C	D	E	F	G	H	J	K	Weight
4143	10	Aluminum	6005A – T61	Clear Anodize	2.500"	2.000"	1.000"	.500"	.257"	.188"	1.866"	.902"	1.183"	30°	.080 lb
4143-Black	10			Black Anodize	2.500"	2.000"	1.000"	.500"	.257"	.188"	1.866"	.902"	1.183"	30°	.080 lb
4331	15			Clear Anodize	3.500"	3.000"	1.500"	.750"	.328"	.250"	2.799"	1.786"	1.650"	30°	.234 lb
4331-Black	15			Black Anodize	3.500"	3.000"	1.500"	.750"	.328"	.250"	2.799"	1.786"	1.650"	30°	.234 lb
40-4331	40			Clear Anodize	93.40mm	80.00mm	40.00mm	20.00mm	8.30mm	6.00mm	75.20mm	48.50mm	45.50mm	30°	.1084 kg
40-4331-Black	40			Black Anodize	93.40mm	80.00mm	40.00mm	20.00mm	8.30mm	6.00mm	75.20mm	48.50mm	45.50mm	30°	.1084 kg

Suggested Hardware (Mount to T-Slot)

Part No.	Series	Qty.	Bolt	T-Nut
3321	10	4	1/4-20 x 1/2" FBHSCS	Economy
3320	15	4	5/16-18 x 11/16" FBHSCS	Economy
75-3422	40	4	M8 x 16mm BHSCS	Economy

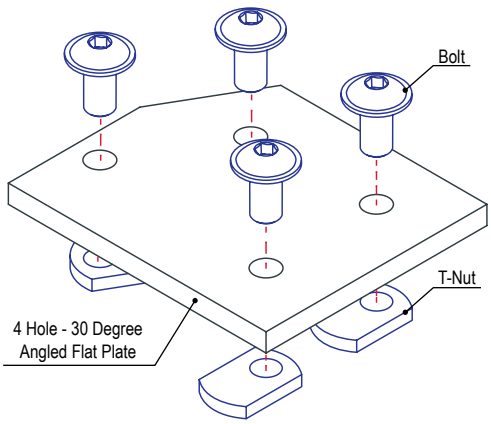

External Fasteners

6 Hole - 30 Degree Angled Flat Plate

- No machining required
- Creates 30 degree angle between profiles
- Pre-load to simplify assembly
- Reconfigurable, reusable

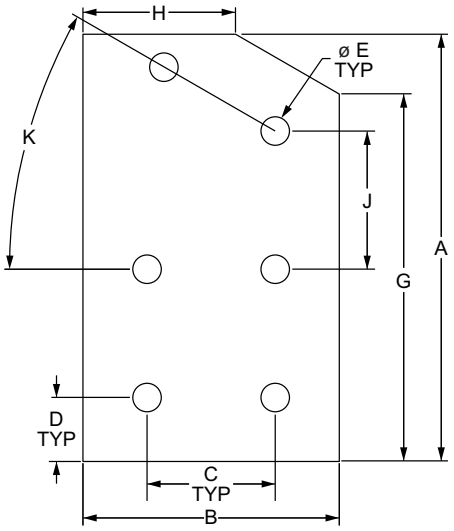

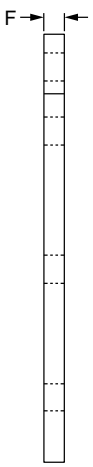

Part No.	Series	Material	Alloy	Finish	A	B	C	D	E	F	G	H	J	K	Weight
4330	15	Aluminum	6005A – T61	Clear Anodize	5.000"	3.000"	1.500"	.750"	.328"	.250"	4.299"	1.786"	1.616"	30°	.338 lb
4330-Black	15			Black Anodize	5.000"	3.000"	1.500"	.750"	.328"	.250"	4.299"	1.786"	1.616"	30°	.338 lb
40-4330	40			Clear Anodize	133.40mm	80.00mm	40.00mm	20.00mm	8.30mm	6.00mm	115.20mm	48.50mm	45.50mm	30°	.1551 kg
40-4330-Black	40			Black Anodize	133.40mm	80.00mm	40.00mm	20.00mm	8.30mm	6.00mm	115.20mm	48.50mm	45.50mm	30°	.1551 kg

Suggested Hardware (Mount to T-Slot)

Part No.	Series	Qty.	Bolt	T-Nut
3320	15	6	5/16-18 x 11/16" FBHSCS	Economy
75-3422	40	6	M8 x 16mm BHSCS	Economy

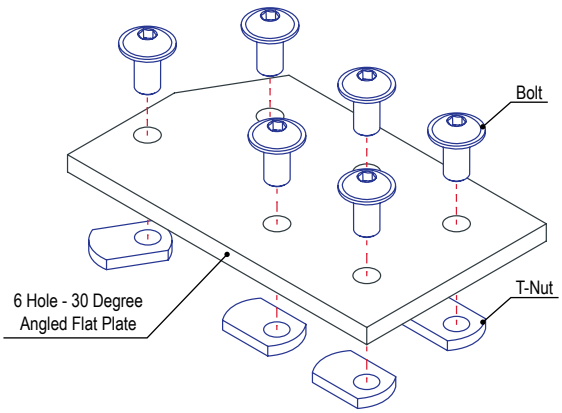

80/20 BUILD YOUR IDEA
More on 80/20® products
available at 8020.net

4 Hole - 45 Degree Angled Flat Plate

- No machining required
- Creates 45 degree angle between profiles
- Pre-load to simplify assembly
- Reconfigurable, reusable

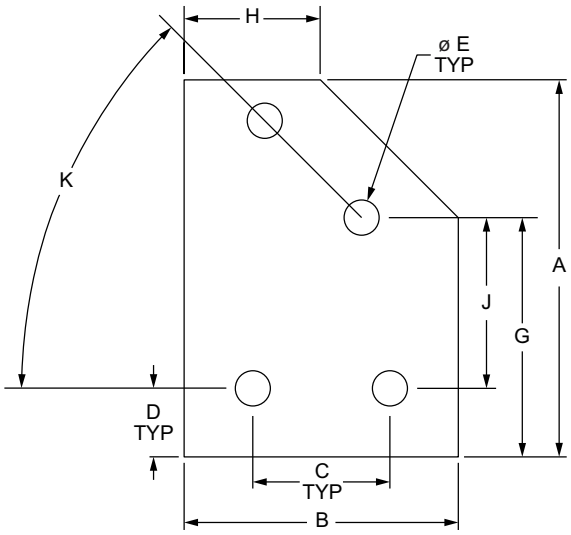

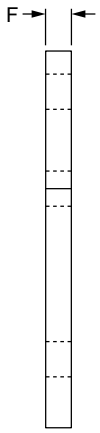

Part No.	Series	Material	Alloy	Finish	A	B	C	D	E	F	G	H	J	K	Weight
4145	10	Aluminum	6005A – T61	Clear Anodize	2.750"	2.000"	1.000"	.500"	.257"	.188"	1.744"	.994"	1.244"	45°	.086 lb
4145-Black	10			Black Anodize	2.750"	2.000"	1.000"	.500"	.257"	.188"	1.744"	.994"	1.244"	45°	.086 lb
4346	15			Clear Anodize	4.500"	3.000"	1.500"	.750"	.328"	.250"	2.561"	1.061"	1.811"	45°	.270 lb
4346-Black	15			Black Anodize	4.500"	3.000"	1.500"	.750"	.328"	.250"	2.561"	1.061"	1.811"	45°	.270 lb
40-4346	40			Clear Anodize	120.00mm	80.00mm	40.00mm	20.00mm	8.30mm	6.00mm	68.60mm	28.60mm	48.60mm	45°	.1111 kg
40-4346-Black	40			Black Anodize	120.00mm	80.00mm	40.00mm	20.00mm	8.30mm	6.00mm	68.60mm	28.60mm	48.60mm	45°	.1111 kg

Suggested Hardware (Mount to T-Slot)

Part No.	Series	Qty.	Bolt	T-Nut
3321	10	4	1/4-20 x 1/2" FBHSCS	Economy
3320	15	4	5/16-18 x 11/16" FBHSCS	Economy
75-3422	40	4	M8 x 16mm BHSCS	Economy

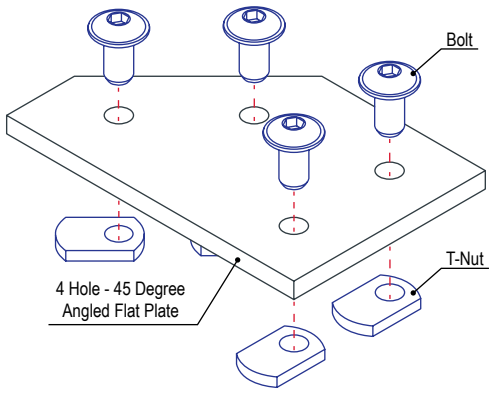

External Fasteners

6 Hole - 45 Degree Angled Flat Plate

- No machining required
- Creates 45 degree angle between profiles
- Pre-load to simplify assembly
- Reconfigurable, reusable

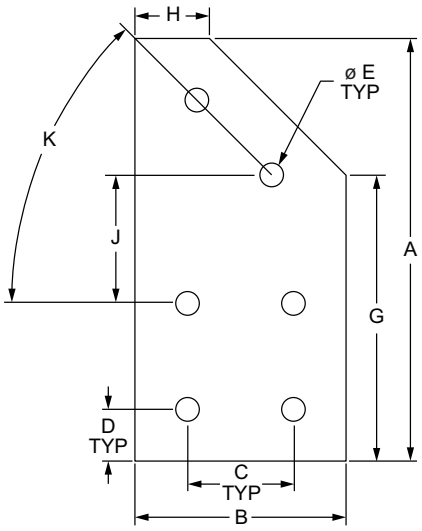

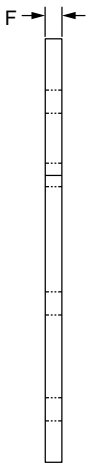

Part No.	Series	Material	Alloy	Finish	A	B	C	D	E	F	G	H	J	K	Weight
4345	15	Aluminum	6005A – T61	Clear Anodize	6.000"	3.000"	1.500"	.750"	.328"	.250"	4.061"	1.061"	1.811"	45°	.368 lb
4345-Black	15			Black Anodize	6.000"	3.000"	1.500"	.750"	.328"	.250"	4.061"	1.061"	1.811"	45°	.368 lb
40-4345	40			Clear Anodize	160.00mm	80.00mm	40.00mm	20.00mm	8.30mm	6.00mm	108.60mm	28.60mm	48.60mm	45°	.1801 kg
40-4345-Black	40			Black Anodize	160.00mm	80.00mm	40.00mm	20.00mm	8.30mm	6.00mm	108.60mm	28.60mm	48.60mm	45°	.1801 kg

Suggested Hardware (Mount to T-Slot)

Part No.	Series	Qty.	Bolt	T-Nut
3320	15	6	5/16-18 x 11/16" FBHSCS	Economy
75-3422	40	6	M8 x 16mm BHSCS	Economy

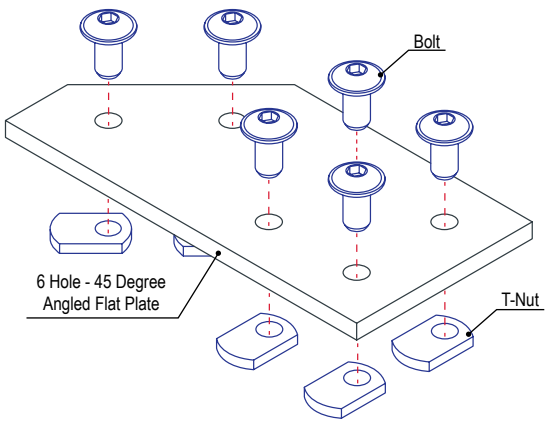

80/20 BUILD YOUR IDEA
More on 80/20® products
available at 8020.net

4 Hole - 60 Degree Angled Flat Plate

- No machining required
- Creates 60 degree angle between profiles
- Pre-load to simplify assembly
- Reconfigurable, reusable

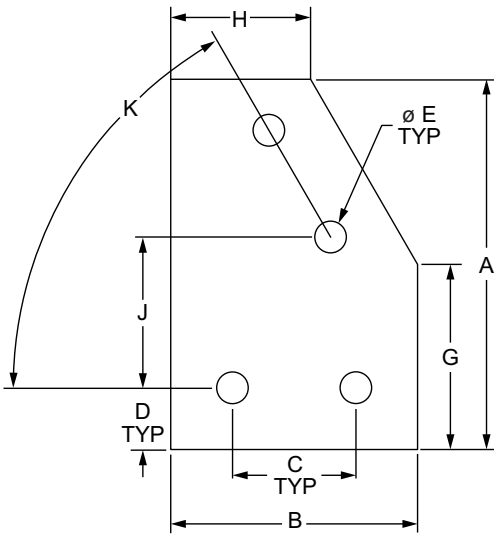

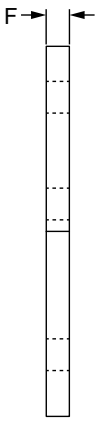

Part No.	Series	Material	Alloy	Finish	A	B	C	D	E	F	G	H	J	K	Weight
4164	10	Aluminum	6005A – T61	Clear Anodize	3.000"	2.000"	1.000"	.500"	.257"	.188"	1.500"	1.134"	1.221"	60°	.092 lb
4164-Black	10			Black Anodize	3.000"	2.000"	1.000"	.500"	.257"	.188"	1.500"	1.134"	1.221"	60°	.092 lb
4361	15			Clear Anodize	4.500"	3.000"	1.500"	.750"	.328"	.250"	2.250"	1.701"	1.558"	60°	.280 lb
4361-Black	15			Black Anodize	4.500"	3.000"	1.500"	.750"	.328"	.250"	2.250"	1.701"	1.558"	60°	.280 lb
40-4361	40			Clear Anodize	120.00mm	80.00mm	40.00mm	20.00mm	8.30mm	6.00mm	60.00mm	45.40mm	47.30mm	60°	.1296 kg
40-4361-Black	40			Black Anodize	120.00mm	80.00mm	40.00mm	20.00mm	8.30mm	6.00mm	60.00mm	45.40mm	47.30mm	60°	.1296 kg

Suggested Hardware (Mount to T-Slot)

Part No.	Series	Qty.	Bolt	T-Nut
3321	10	4	1/4-20 x 1/2" FBHSCS	Economy
3320	15	4	5/16-18 x 11/16" FBHSCS	Economy
75-3422	40	4	M8 x 16mm BHSCS	Economy

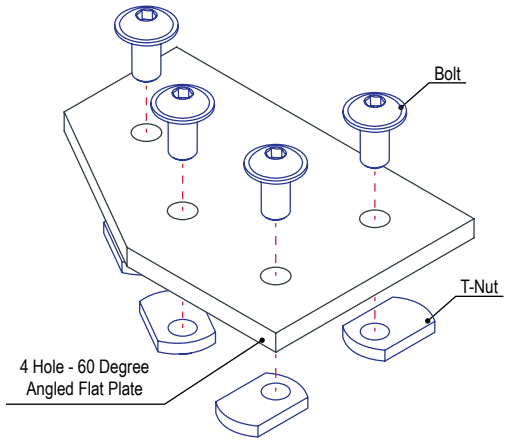

External Fasteners

6 Hole - 60 Degree Angled Flat Plate

- No machining required
- Creates 60 degree angle between profiles
- Pre-load to simplify assembly
- Reconfigurable, reusable

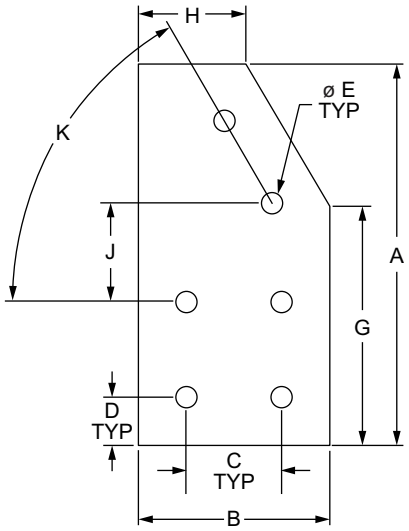

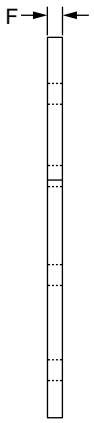

Part No.	Series	Material	Alloy	Finish	A	B	C	D	E	F	G	H	J	K	Weight
4362	15	Aluminum	6005A – T61	Clear Anodize	6.000"	3.000"	1.500"	.750"	.328"	.250"	3.750"	1.701"	1.558"	60°	.384 lb
4362-Black	15			Black Anodize	6.000"	3.000"	1.500"	.750"	.328"	.250"	3.750"	1.701"	1.558"	60°	.384 lb
40-4362	40			Clear Anodize	160.00mm	80.00mm	40.00mm	20.00mm	8.30mm	6.00mm	100.00mm	45.40mm	47.30mm	60°	.1837 kg
40-4362-Black	40			Black Anodize	160.00mm	80.00mm	40.00mm	20.00mm	8.30mm	6.00mm	100.00mm	45.40mm	47.30mm	60°	.1837 kg

Suggested Hardware (Mount to T-Slot)

Part No.	Series	Qty.	Bolt	T-Nut
3320	15	6	5/16-18 x 11/16" FBHSCS	Economy
75-3422	40	6	M8 x 16mm BHSCS	Economy

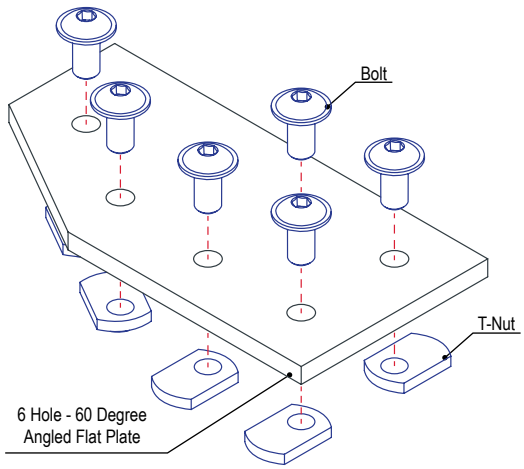

80/20 BUILD YOUR IDEA
More on 80/20® products
available at 8020.net

4 Hole - Tee Flat Plate

- No machining required
- Pre-load to simplify assembly
- Reconfigurable, reusable

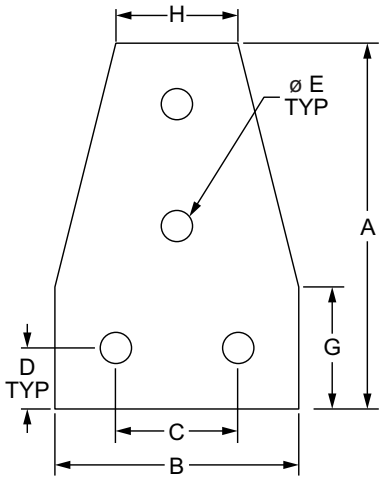

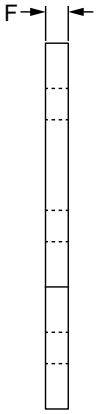

Part No.	Series	Material	Alloy	Finish	A	B	C	D	E	F	G	H	Weight
4141	10	Aluminum	6005A – T61	Clear Anodize	3.000"	2.000"	1.000"	.500"	.257"	.188"	1.000"	1.000"	.086 lb
4141-Black	10			Black Anodize	3.000"	2.000"	1.000"	.500"	.257"	.188"	1.000"	1.000"	.086 lb
4341	15 RT			Clear Anodize	4.500"	3.000"	1.500"	.750"	.328"	.250"	1.500"	1.500"	.267 lb
4341-Black	15 RT			Black Anodize	4.500"	3.000"	1.500"	.750"	.328"	.250"	1.500"	1.500"	.267 lb
25-4141	25			Clear Anodize	75.00mm	50.00mm	25.00mm	12.50mm	6.30mm	4.00mm	25.00mm	25.00mm	.0318 kg
25-4141-Black	25			Black Anodize	75.00mm	50.00mm	25.00mm	12.50mm	6.30mm	4.00mm	25.00mm	25.00mm	.0318 kg
40-4341	40			Clear Anodize	120.00mm	80.00mm	40.00mm	20.00mm	8.30mm	6.00mm	40.00mm	40.00mm	.1207 kg
40-4341-Black	40			Black Anodize	120.00mm	80.00mm	40.00mm	20.00mm	8.30mm	6.00mm	40.00mm	40.00mm	.1207 kg

Suggested Hardware (Mount to T-Slot)

Part No.	Series	Qty.	Bolt	T-Nut
3321	10	4	1/4-20 x 1/2" FBHSCS	Economy
3320	15	4	5/16-18 x 11/16" FBHSCS	Economy
75-3404	25	4	M6 x 10mm BHSCS	Economy
75-3422	40	4	M8 x 16mm BHSCS	Economy

Suggested Hardware (Mount to Ready Tube)

Part No.	Series	Qty.	Bolt Assembly
3960	RT	4	5/16-18 x 2.00" Flange Hex Head Bolt w/ Flanged Hex Nut

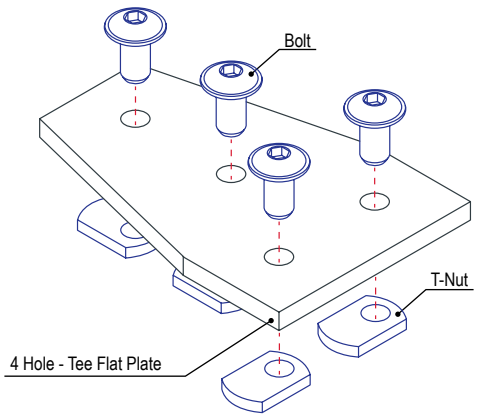

External Fasteners

5 Hole - Tee Flat Plate

- No machining required
- Pre-load to simplify assembly
- Reconfigurable, reusable

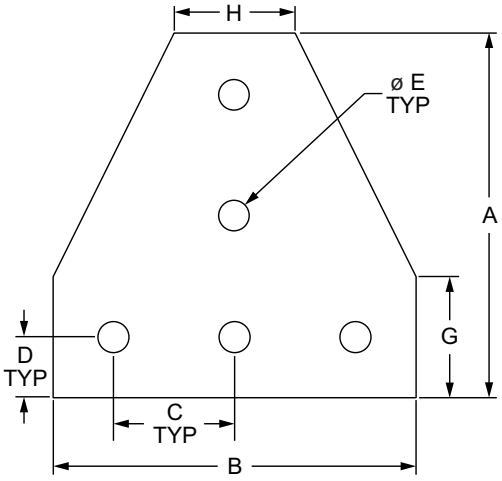

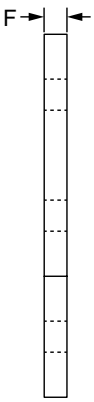

Part No.	Series	Material	Alloy	Finish	A	B	C	D	E	F	G	H	Weight
4140	10	Aluminum	6005A – T61	Clear Anodize	3.000"	3.000"	1.000"	.500"	.257"	.188"	1.000"	1.000"	.118 lb
4140-Black	10			Black Anodize	3.000"	3.000"	1.000"	.500"	.257"	.188"	1.000"	1.000"	.118 lb
4340	15 RT			Clear Anodize	4.500"	4.500"	1.500"	.750"	.328"	.250"	1.500"	1.500"	.364 lb
4340-Black	15 RT			Black Anodize	4.500"	4.500"	1.500"	.750"	.328"	.250"	1.500"	1.500"	.364 lb
25-4140	25			Clear Anodize	75.00mm	75.00mm	25.00mm	12.50mm	6.30mm	4.00mm	25.00mm	25.00mm	.0210 kg
25-4140-Black	25			Black Anodize	75.00mm	75.00mm	25.00mm	12.50mm	6.30mm	4.00mm	25.00mm	25.00mm	.0210 kg
30-4340	30			Clear Anodize	90.00mm	90.00mm	30.00mm	15.00mm	6.30mm	4.00mm	30.00mm	30.00mm	.0645 kg
30-4340-Black	30			Black Anodize	90.00mm	90.00mm	30.00mm	15.00mm	6.30mm	4.00mm	30.00mm	30.00mm	.0645 kg
40-4340	40			Clear Anodize	120.00mm	120.00mm	40.00mm	20.00mm	8.30mm	6.00mm	40.00mm	40.00mm	.1734 kg
40-4340-Black	40			Black Anodize	120.00mm	120.00mm	40.00mm	20.00mm	8.30mm	6.00mm	40.00mm	40.00mm	.1734 kg
45-4340	45			Clear Anodize	135.00mm	135.00mm	45.00mm	22.50mm	8.30mm	6.00mm	45.00mm	45.00mm	.2203 kg
45-4340-Black	45			Black Anodize	135.00mm	135.00mm	45.00mm	22.50mm	8.30mm	6.00mm	45.00mm	45.00mm	.2203 kg

Suggested Hardware (Mount to T-Slot)

Part No.	Series	Qty.	Bolt	T-Nut
3321	10	5	1/4-20 x 1/2" FBHSCS	Economy
3320	15	5	5/16-18 x 11/16" FBHSCS	Economy
75-3404	25	5	M6 x 10mm BHSCS	Economy
75-3600	30	5	M6 x 12mm BHSCS	Drop-in
75-3422	40	5	M8 x 16mm BHSCS	Economy
75-3619	45	5	M8 x 18mm BHSCS	Drop-in

Suggested Hardware (Mount to Ready Tube)

Part No.	Series	Qty.	Bolt Assembly
3960	RT	5	5/16-18 x 2.00" Flange Hex Head Bolt w/ Flanged Hex Nut

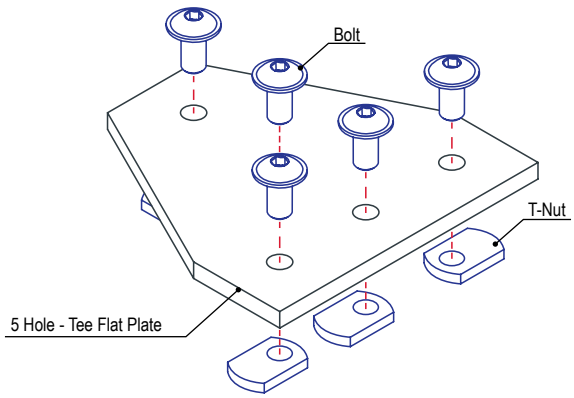

80/20 BUILD YOUR IDEA
More on 80/20® products available at 8020.net

6 Hole - Tee Flat Plate

- No machining required
- Pre-load to simplify assembly
- Reconfigurable, reusable

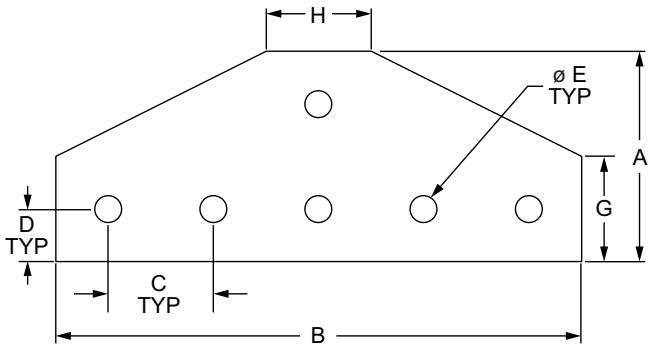

Part No.	Series	Material	Alloy	Finish	A	B	C	D	E	F	G	H	Weight
4123	10	Aluminum	6005A – T61	Clear Anodize	2.000"	5.000"	1.000"	.500"	.257"	.188"	1.000"	1.000"	.137 lb
4123-Black	10			Black Anodize	2.000"	5.000"	1.000"	.500"	.257"	.188"	1.000"	1.000"	.137 lb
4310	15 RT			Clear Anodize	3.000"	7.500"	1.500"	.750"	.328"	.250"	1.500"	1.500"	.416 lb
4310-Black	15 RT			Black Anodize	3.000"	7.500"	1.500"	.750"	.328"	.250"	1.500"	1.500"	.416 lb

Suggested Hardware (Mount to T-Slot)

Part No.	Series	Qty.	Bolt	T-Nut
3321	10	6	1/4-20 x 1/2" FBHSCS	Economy
3320	15	6	5/16-18 x 11/16" FBHSCS	Economy

Suggested Hardware (Mount to Ready Tube)

Part No.	Series	Qty.	Bolt Assembly
3960	RT	6	5/16-18 x 2.00" Flange Hex Head Bolt w/ Flanged Hex Nut

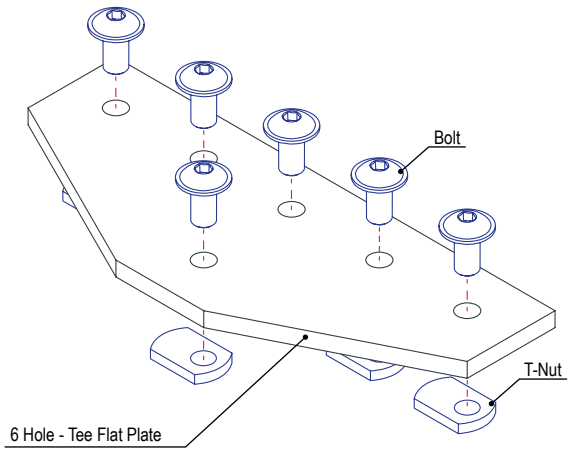

External Fasteners

7 Hole - Tee Flat Plate

- No machining required
- Pre-load to simplify assembly
- Reconfigurable, reusable

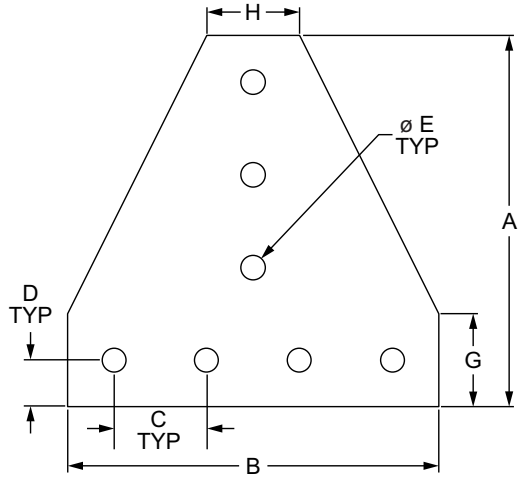

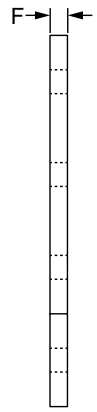

Part No.	Series	Material	Alloy	Finish	A	B	C	D	E	F	G	H	Weight
4112	10	Aluminum	6005A – T61	Clear Anodize	4.000"	4.000"	1.000"	.500"	.257"	.188"	1.000"	1.000"	.199 lb
4112-Black	10			Black Anodize	4.000"	4.000"	1.000"	.500"	.257"	.188"	1.000"	1.000"	.199 lb
4312	15 RT			Clear Anodize	6.000"	6.000"	1.500"	.750"	.328"	.250"	1.500"	1.500"	.604 lb
4312-Black	15 RT			Black Anodize	6.000"	6.000"	1.500"	.750"	.328"	.250"	1.500"	1.500"	.604 lb
25-4112	25			Clear Anodize	100.00mm	100.00mm	25.00mm	12.50mm	6.30mm	4.00mm	25.00mm	25.00mm	.0739 kg
25-4112-Black	25			Black Anodize	100.00mm	100.00mm	25.00mm	12.50mm	6.30mm	4.00mm	25.00mm	25.00mm	.0739 kg
40-4312	40			Clear Anodize	160.00mm	160.00mm	40.00mm	20.00mm	8.30mm	6.00mm	40.00mm	40.00mm	.2853 kg
40-4312-Black	40			Black Anodize	160.00mm	160.00mm	40.00mm	20.00mm	8.30mm	6.00mm	40.00mm	40.00mm	.2853 kg

Suggested Hardware (Mount to T-Slot)

Part No.	Series	Qty.	Bolt	T-Nut
3321	10	7	1/4-20 x 1/2" FBHSCS	Economy
3320	15	7	5/16-18 x 11/16" FBHSCS	Economy
75-3404	25	7	M6 x 10mm BHSCS	Economy
75-3422	40	7	M8 x 16mm BHSCS	Economy

Suggested Hardware (Mount to Ready Tube)

Part No.	Series	Qty.	Bolt Assembly
3960	RT	7	5/16-18 x 2.00" Flange Hex Head Bolt w/ Flanged Hex Nut

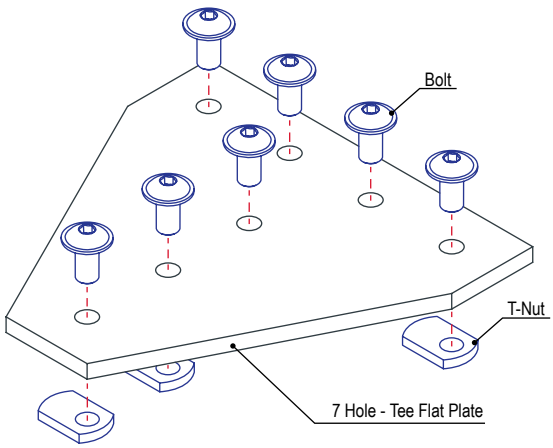

80/20 BUILD YOUR IDEA
More on 80/20® products available at 8020.net

8 Hole - Tee Flat Plate

- No machining required
- Pre-load to simplify assembly
- Reconfigurable, reusable

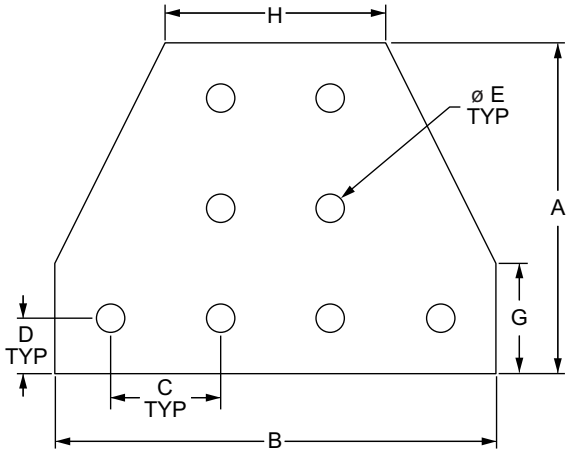

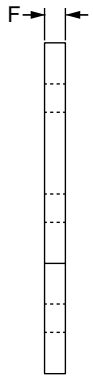

Part No.	Series	Material	Alloy	Finish	A	B	C	D	E	F	G	H	Weight
4155	10	Aluminum	6005A – T61	Clear Anodize	3.000"	4.000"	1.000"	.500"	.257"	.188"	1.000"	2.000"	.167 lb
4155-Black	10			Black Anodize	3.000"	4.000"	1.000"	.500"	.257"	.188"	1.000"	2.000"	.167 lb
4355	15			Clear Anodize	4.500"	6.000"	1.500"	.750"	.328"	.250"	1.500"	3.000"	.514 lb
4355-Black	15			Black Anodize	4.500"	6.000"	1.500"	.750"	.328"	.250"	1.500"	3.000"	.514 lb
25-4155	25			Clear Anodize	75.00mm	100.00mm	25.00mm	12.50mm	6.30mm	4.00mm	25.00mm	50.00mm	.0648 kg
25-4155-Black	25			Black Anodize	75.00mm	100.00mm	25.00mm	12.50mm	6.30mm	4.00mm	25.00mm	50.00mm	.0648 kg
40-4355	40			Clear Anodize	120.00mm	160.00mm	40.00mm	20.00mm	8.30mm	6.00mm	40.00mm	80.00mm	.2467 kg
40-4355-Black	40			Black Anodize	120.00mm	160.00mm	40.00mm	20.00mm	8.30mm	6.00mm	40.00mm	80.00mm	.2467 kg
45-4355	45			Clear Anodize	135.00mm	180.00mm	45.00mm	22.50mm	8.30mm	6.00mm	45.00mm	90.00mm	.3171 kg
45-4355-Black	45			Black Anodize	135.00mm	180.00mm	45.00mm	22.50mm	8.30mm	6.00mm	45.00mm	90.00mm	.3171 kg

Suggested Hardware (Mount to T-Slot)

Part No.	Series	Qty.	Bolt	T-Nut
3321	10	8	1/4-20 x 1/2" FBHSCS	Economy
3320	15	8	5/16-18 x 11/16" FBHSCS	Economy
75-3404	25	8	M6 x 10mm BHSCS	Economy
75-3422	40	8	M8 x 16mm BHSCS	Economy
75-3619	45	8	M8 x 18mm BHSCS	Drop-in

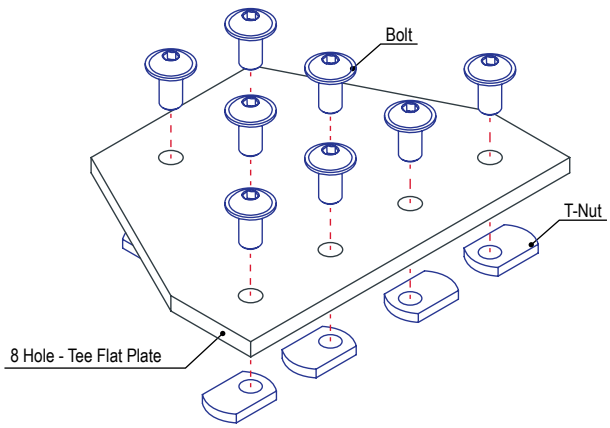

External Fasteners

11 Hole - Tee Flat Plate

- No machining required
- Pre-load to simplify assembly
- Reconfigurable, reusable

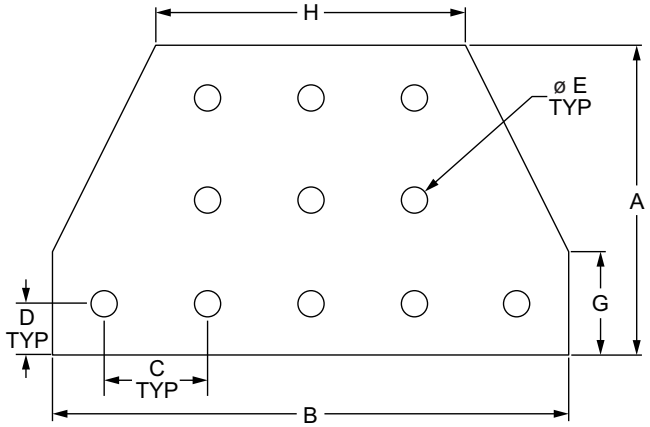

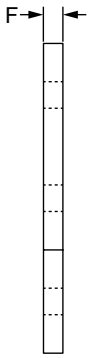

Part No.	Series	Material	Alloy	Finish	A	B	C	D	E	F	G	H	Weight
4021	10	Aluminum	6005A – T61	Clear Anodize	3.000"	5.000"	1.000"	.500"	.257"	.188"	1.000"	3.000"	.219 lb
4021-Black	10			Black Anodize	3.000"	5.000"	1.000"	.500"	.257"	.188"	1.000"	3.000"	.219 lb
4421	15			Clear Anodize	4.500"	7.500"	1.500"	.750"	.328"	.250"	1.500"	4.500"	.671 lb
4421-Black	15			Black Anodize	4.500"	7.500"	1.500"	.750"	.328"	.250"	1.500"	4.500"	.671 lb

Suggested Hardware (Mount to T-Slot)

Part No.	Series	Qty.	Bolt	T-Nut
3321	10	11	1/4-20 x 1/2" FBHSCS	Economy
3320	15	11	5/16-18 x 11/16" FBHSCS	Economy

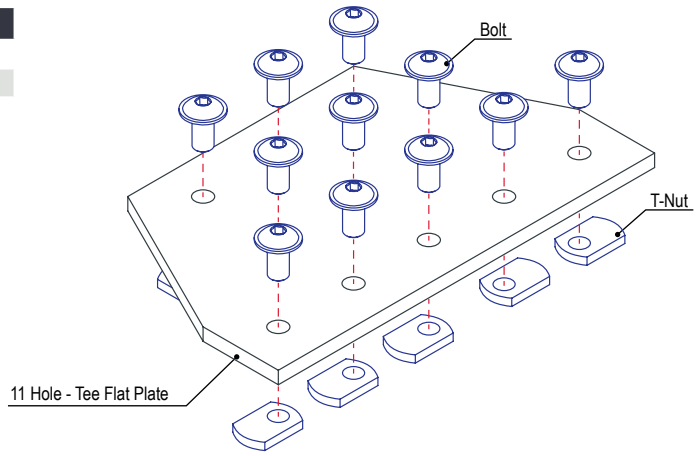

80/20 BUILD YOUR IDEA
More on 80/20® products available at 8020.net

12 Hole - Tee Flat Plate

- No machining required
- Pre-load to simplify assembly
- Reconfigurable, reusable

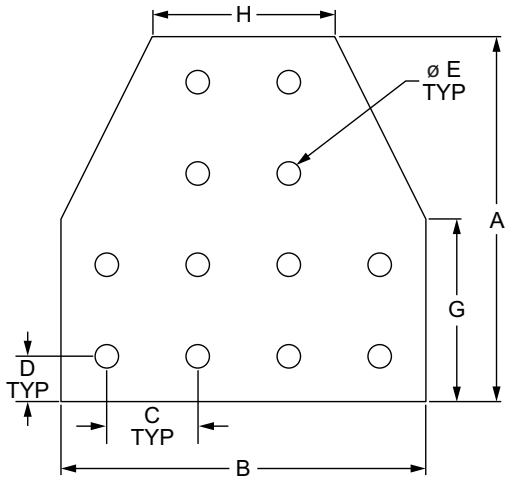

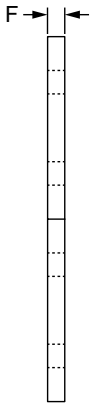

Part No.	Series	Material	Alloy	Finish	A	B	C	D	E	F	G	H	Weight
4125	10	Aluminum	6005A – T61	Clear Anodize	4.000"	4.000"	1.000"	.500"	.257"	.188"	2.000"	2.000"	.239 lb
4125-Black	10			Black Anodize	4.000"	4.000"	1.000"	.500"	.257"	.188"	2.000"	2.000"	.239 lb
4325	15			Clear Anodize	6.000"	6.000"	1.500"	.750"	.328"	.250"	3.000"	3.000"	.728 lb
4325-Black	15			Black Anodize	6.000"	6.000"	1.500"	.750"	.328"	.250"	3.000"	3.000"	.728 lb
25-4125	25			Clear Anodize	100.00mm	100.00mm	25.00mm	12.50mm	6.30mm	4.00mm	50.00mm	50.00mm	.0893 kg
25-4125-Black	25			Black Anodize	100.00mm	100.00mm	25.00mm	12.50mm	6.30mm	4.00mm	50.00mm	50.00mm	.0893 kg
40-4325	40			Clear Anodize	160.00mm	160.00mm	40.00mm	20.00mm	8.30mm	6.00mm	80.00mm	80.00mm	.3474 kg
40-4325-Black	40			Black Anodize	160.00mm	160.00mm	40.00mm	20.00mm	8.30mm	6.00mm	80.00mm	80.00mm	.3474 kg

Suggested Hardware (Mount to T-Slot)

Part No.	Series	Qty.	Bolt	T-Nut
3321	10	12	1/4-20 x 1/2" FBHSCS	Economy
3320	15	12	5/16-18 x 11/16" FBHSCS	Economy
75-3404	25	12	M6 x 10mm BHSCS	Economy
75-3422	40	12	M8 x 16mm BHSCS	Economy

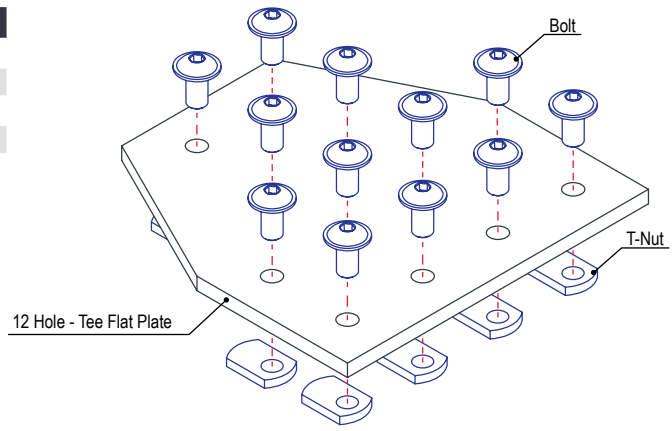

External Fasteners

16 Hole - Tee Flat Plate

- No machining required
- Pre-load to simplify assembly
- Reconfigurable, reusable

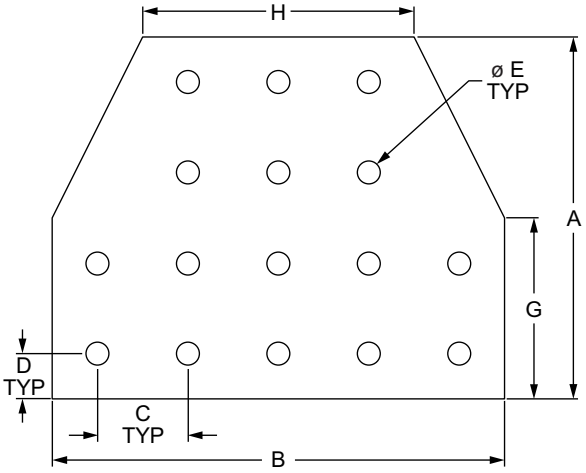

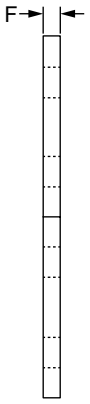

Part No.	Series	Material	Alloy	Finish	A	B	C	D	E	F	G	H	Weight
4022	10	Aluminum	6005A – T61	Clear Anodize	4.000"	5.000"	1.000"	.500"	.257"	.188"	2.000"	3.000"	.307 lb
4022-Black	10			Black Anodize	4.000"	5.000"	1.000"	.500"	.257"	.188"	2.000"	3.000"	.307 lb
4422	15			Clear Anodize	6.000"	7.500"	1.500"	.750"	.328"	.250"	3.000"	4.500"	.935 lb
4422-Black	15			Black Anodize	6.000"	7.500"	1.500"	.750"	.328"	.250"	3.000"	4.500"	.935 lb

Suggested Hardware (Mount to T-Slot)

Part No.	Series	Qty.	Bolt	T-Nut
3321	10	16	1/4-20 x 1/2" FBHSCS	Economy
3320	15	16	5/16-18 x 11/16" FBHSCS	Economy

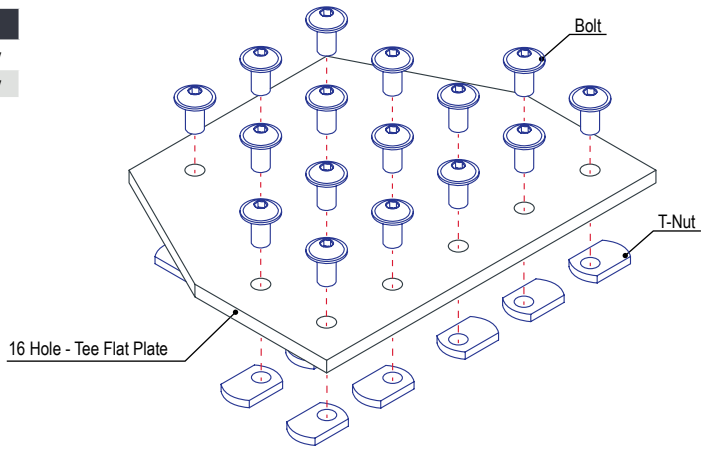

80/20 BUILD YOUR IDEA
More on 80/20® products available at 8020.net

7 Hole - Cross Flat Plate

- No machining required
- Pre-load to simplify assembly
- Reconfigurable, reusable
- Join more than two profiles
- Creates 4-way connection hub

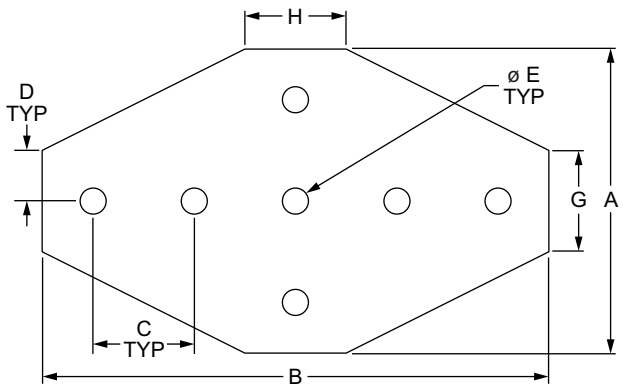

Part No.	Series	Material	Alloy	Finish	A	B	C	D	E	F	G	H	Weight
4135	10	Aluminum	6005A – T61	Clear Anodize	3.000"	5.000"	1.000"	.500"	.257"	.188"	1.000"	1.000"	.187 lb
4135-Black	10			Black Anodize	3.000"	5.000"	1.000"	.500"	.257"	.188"	1.000"	1.000"	.187 lb
4335	15 RT			Clear Anodize	4.500"	7.500"	1.500"	.750"	.328"	.250"	1.500"	1.500"	.569 lb
4335-Black	15 RT			Black Anodize	4.500"	7.500"	1.500"	.750"	.328"	.250"	1.500"	1.500"	.569 lb
25-4135	25			Clear Anodize	75.00mm	125.00mm	25.00mm	12.50mm	6.30mm	4.00mm	25.00mm	25.00mm	.0703 kg
25-4135-Black	25			Black Anodize	75.00mm	125.00mm	25.00mm	12.50mm	6.30mm	4.00mm	25.00mm	25.00mm	.0703 kg
30-4335	30			Clear Anodize	90.00mm	150.00mm	30.00mm	15.00mm	6.30mm	4.00mm	30.00mm	30.00mm	.1025 kg
30-4335-Black	30			Black Anodize	90.00mm	150.00mm	30.00mm	15.00mm	6.30mm	4.00mm	30.00mm	30.00mm	.1025 kg
40-4335	40			Clear Anodize	120.00mm	200.00mm	40.00mm	20.00mm	8.30mm	6.00mm	40.00mm	40.00mm	.2681 kg
40-4335-Black	40			Black Anodize	120.00mm	200.00mm	40.00mm	20.00mm	8.30mm	6.00mm	40.00mm	40.00mm	.2681 kg
45-4335	45			Clear Anodize	135.00mm	225.00mm	45.00mm	22.50mm	8.30mm	6.00mm	45.00mm	45.00mm	.3465 kg
45-4335-Black	45			Black Anodize	135.00mm	225.00mm	45.00mm	22.50mm	8.30mm	6.00mm	45.00mm	45.00mm	.3465 kg

Suggested Hardware (Mount to T-Slot)

Part No.	Series	Qty.	Bolt	T-Nut
3321	10	7	1/4-20 x 1/2" FBHSCS	Economy
3320	15	7	5/16-18 x 11/16" FBHSCS	Economy
75-3404	25	7	M6 x 10mm BHSCS	Economy
75-3600	30	7	M6 x 12mm BHSCS	Drop-in
75-3422	40	7	M8 x 16mm BHSCS	Economy
75-3619	45	7	M8 x 18mm BHSCS	Drop-in

Suggested Hardware (Mount to Ready Tube)

Part No.	Series	Qty.	Bolt Assembly
3960	RT	7	5/16-18 x 2.00" Flange Hex Head Bolt w/ Flanged Hex Nut

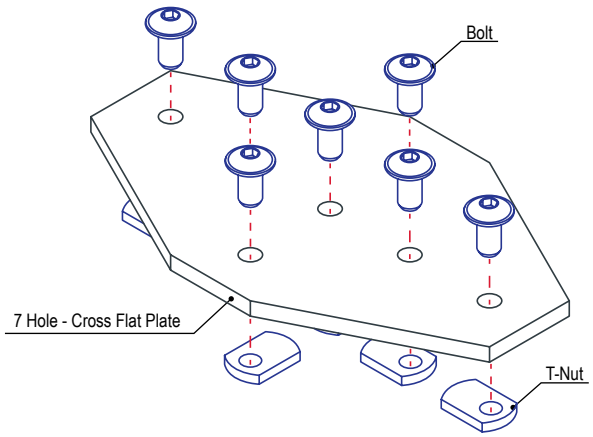

External Fasteners

12 Hole - Cross Flat Plate

- No machining required
- Pre-load to simplify assembly
- Reconfigurable, reusable
- Join more than two profiles
- Creates 4-way connection hub

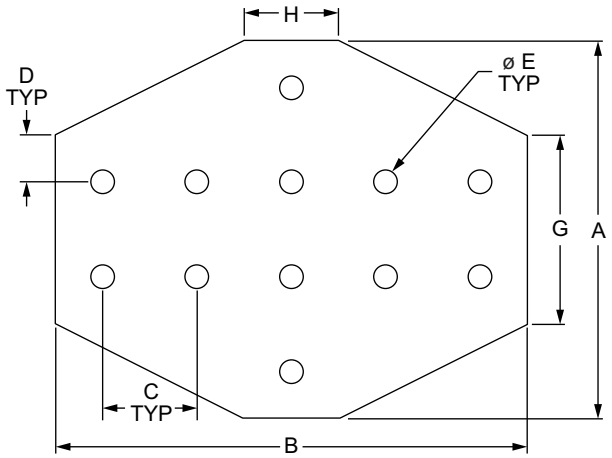

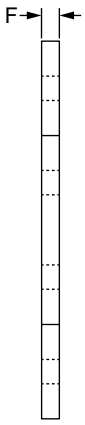

Part No.	Series	Material	Alloy	Finish	A	B	C	D	E	F	G	H	Weight
4160	10	Aluminum	6005A – T61	Clear Anodize	4.000"	5.000"	1.000"	.500"	.257"	.188"	2.000"	1.000"	.272 lb
4160-Black	10			Black Anodize	4.000"	5.000"	1.000"	.500"	.257"	.188"	2.000"	1.000"	.272 lb
4360	15			Clear Anodize	6.000"	7.500"	1.500"	.750"	.328"	.250"	3.000"	1.500"	.860 lb
4360-Black	15			Black Anodize	6.000"	7.500"	1.500"	.750"	.328"	.250"	3.000"	1.500"	.860 lb

Suggested Hardware (Mount to T-Slot)

Part No.	Series	Qty.	Bolt	T-Nut
3321	10	12	1/4-20 x 1/2" FBHSCS	Economy
3320	15	12	5/16-18 x 11/16" FBHSCS	Economy

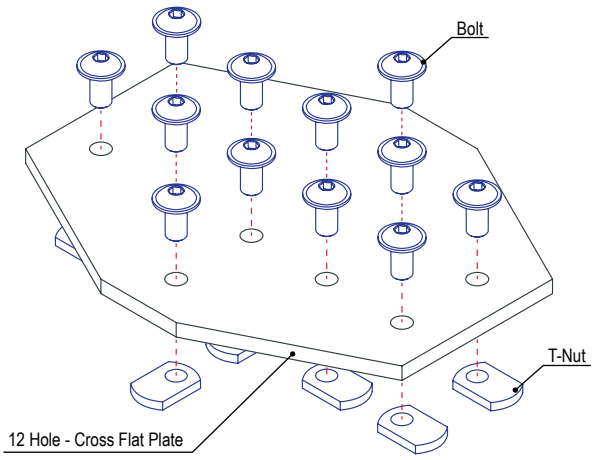

80/20 BUILD YOUR IDEA
More on 80/20® products available at 8020.net

16 Hole - Cross Flat Plate

- No machining required
- Pre-load to simplify assembly
- Reconfigurable, reusable
- Join more than two profiles
- Creates 4-way connection hub

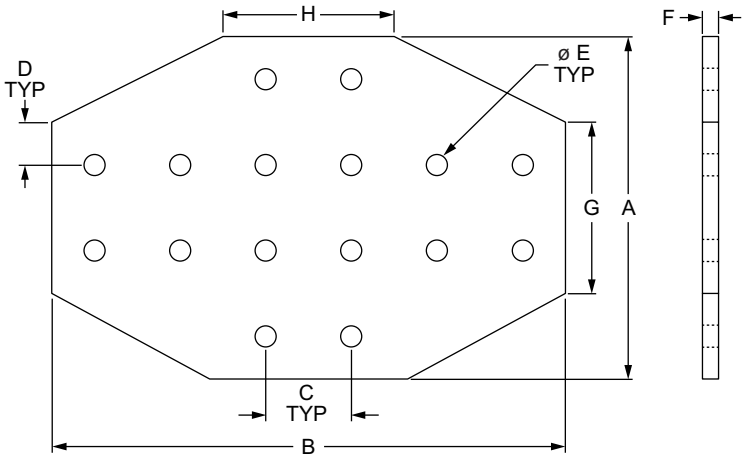

Part No.	Series	Material	Alloy	Finish	A	B	C	D	E	F	G	H	Weight
4170	10	Aluminum	6005A – T61	Clear Anodize	4.000"	6.000"	1.000"	.500"	.257"	.188"	2.000"	2.000"	.340 lb
4170-Black	10			Black Anodize	4.000"	6.000"	1.000"	.500"	.257"	.188"	2.000"	2.000"	.340 lb
4370	15			Clear Anodize	6.000"	9.000"	1.500"	.750"	.328"	.250"	3.000"	3.000"	1.040 lb
4370-Black	15			Black Anodize	6.000"	9.000"	1.500"	.750"	.328"	.250"	3.000"	3.000"	1.040 lb
25-4170	25			Clear Anodize	100.00mm	150.00mm	25.00mm	12.50mm	6.30mm	4.00mm	50.00mm	50.00mm	.1266 kg
25-4170-Black	25			Black Anodize	100.00mm	150.00mm	25.00mm	12.50mm	6.30mm	4.00mm	50.00mm	50.00mm	.1266 kg
40-4370	40			Clear Anodize	160.00mm	240.00mm	40.00mm	20.00mm	8.30mm	6.00mm	80.00mm	80.00mm	.4968 kg
40-4370-Black	40			Black Anodize	160.00mm	240.00mm	40.00mm	20.00mm	8.30mm	6.00mm	80.00mm	80.00mm	.4968 kg

Suggested Hardware (Mount to T-Slot)

Part No.	Series	Qty.	Bolt	T-Nut
3321	10	16	1/4-20 x 1/2" FBHSCS	Economy
3320	15	16	5/16-18 x 11/16" FBHSCS	Economy
75-3404	25	16	M6 x 10mm BHSCS	Economy
75-3422	40	16	M8 x 16mm BHSCS	Economy

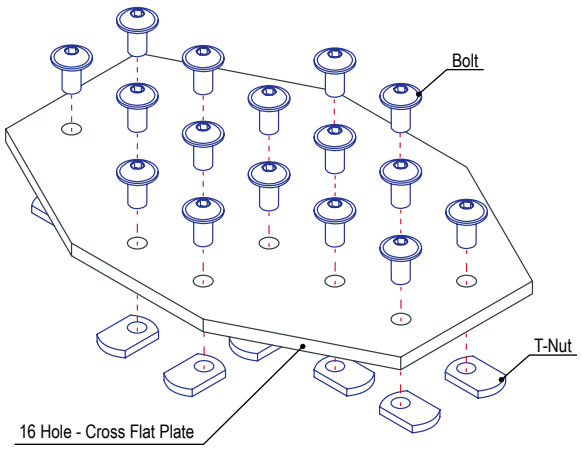

External Fasteners

20 Hole - Cross Flat Plate

- No machining required
- Pre-load to simplify assembly
- Reconfigurable, reusable
- Join more than two profiles
- Creates 4-way connection hub

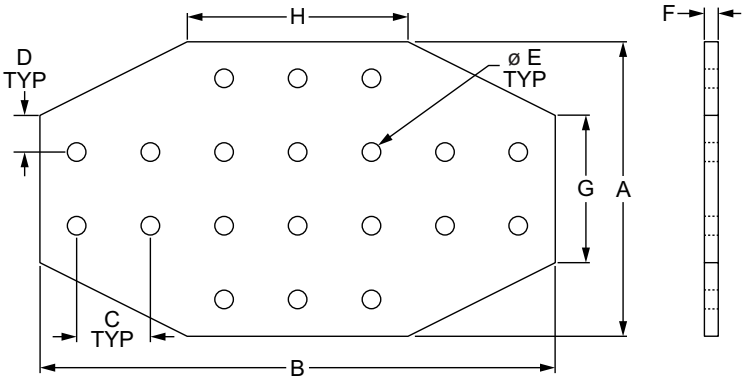

Part No.	Series	Material	Alloy	Finish	A	B	C	D	E	F	G	H	Weight
4023	10	Aluminum	6005A – T61	Clear Anodize	4.000”	7.000”	1.000”	.500”	.257”	.188”	2.000”	3.000”	.410 lb
4023-Black	10			Black Anodize	4.000”	7.000”	1.000”	.500”	.257”	.188”	2.000”	3.000”	.410 lb
4423	15			Clear Anodize	6.000”	10.500”	1.500”	.750”	.328”	.250”	3.000”	4.500”	1.291 lb
4423-Black	15			Black Anodize	6.000”	10.500”	1.500”	.750”	.328”	.250”	3.000”	4.500”	1.291 lb

Suggested Hardware (Mount to T-Slot)

Part No.	Series	Qty.	Bolt	T-Nut
3321	10	20	1/4-20 x 1/2” FBHSCS	Economy
3320	15	20	5/16-18 x 11/16” FBHSCS	Economy

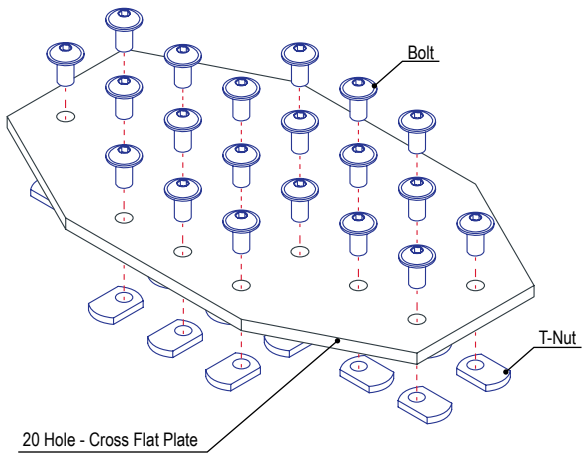

80/20 BUILD YOUR IDEA
More on 80/20® products available at 8020.net

5 Hole - "L" Flat Plate

- No machining required
- Pre-load to simplify assembly
- Reconfigurable, reusable
- Forms a corner connection
- Creates 90º angle between profiles

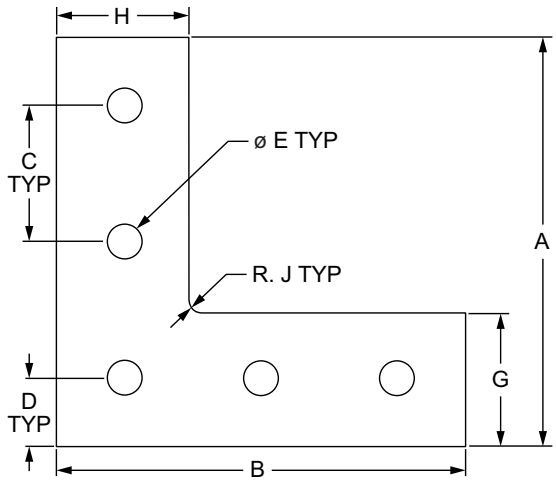

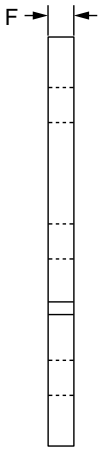

Part No.	Series	Material	Alloy	Finish	A	B	C	D	E	F	G	H	J	Weight
4081	10	Aluminum	6005A – T61	Clear Anodize	3.000"	3.000"	1.000"	.500"	.257"	.188"	.971"	.971"	.082"	.082 lb
4081-Black	10			Black Anodize	3.000"	3.000"	1.000"	.500"	.257"	.188"	.971"	.971"	.082"	.082 lb
4481	15			Clear Anodize	4.500"	4.500"	1.500"	.750"	.328"	.250"	1.464"	1.464"	.125"	.257 lb
4481-Black	15			Black Anodize	4.500"	4.500"	1.500"	.750"	.328"	.250"	1.464"	1.464"	.125"	.257 lb
20-4081	20			Clear Anodize	60.00mm	60.00mm	20.00mm	10.00mm	5.56mm	4.00mm	19.00mm	19.00mm	2.38mm	.0193 kg
20-4081-Black	20			Black Anodize	60.00mm	60.00mm	20.00mm	10.00mm	5.56mm	4.00mm	19.00mm	19.00mm	2.38mm	.0193 kg
25-4081	25			Clear Anodize	75.00mm	75.00mm	25.00mm	12.50mm	6.30mm	4.00mm	24.00mm	24.00mm	2.38mm	.0308 kg
25-4081-Black	25			Black Anodize	75.00mm	75.00mm	25.00mm	12.50mm	6.30mm	4.00mm	24.00mm	24.00mm	2.38mm	.0308 kg
30-4481	30			Clear Anodize	90.00mm	90.00mm	30.00mm	15.00mm	6.81mm	4.00mm	29.00mm	29.00mm	3.18mm	.0452 kg
30-4481-Black	30			Black Anodize	90.00mm	90.00mm	30.00mm	15.00mm	6.81mm	4.00mm	29.00mm	29.00mm	3.18mm	.0452 kg
40-4481	40			Clear Anodize	120.00mm	120.00mm	40.00mm	20.00mm	8.33mm	6.00mm	39.00mm	39.00mm	4.76mm	.1224 kg
40-4481-Black	40			Black Anodize	120.00mm	120.00mm	40.00mm	20.00mm	8.33mm	6.00mm	39.00mm	39.00mm	4.76mm	.1224 kg
45-4481	45			Clear Anodize	135.00mm	135.00mm	45.00mm	22.50mm	8.33mm	6.00mm	44.00mm	44.00mm	4.76mm	.1564 kg
45-4481-Black	45			Black Anodize	135.00mm	135.00mm	45.00mm	22.50mm	8.33mm	6.00mm	44.00mm	44.00mm	4.76mm	.1564 kg

Suggested Hardware (Mount to T-Slot)

Part No.	Series	Qty.	Bolt	T-Nut
3321	10	5	1/4-20 x 1/2" FBHSCS	Economy
3320	15	5	5/16-18 x 11/16" FBHSCS	Economy
75-3656	20	5	M5 x 10mm BHSCS	Economy
75-3404	25	5	M6 x 10mm BHSCS	Economy
75-3600	30	5	M6 x 12mm BHSCS	Drop-in
75-3422	40	5	M8 x 16mm BHSCS	Economy
75-3619	45	5	M8 x 18mm BHSCS	Drop-in

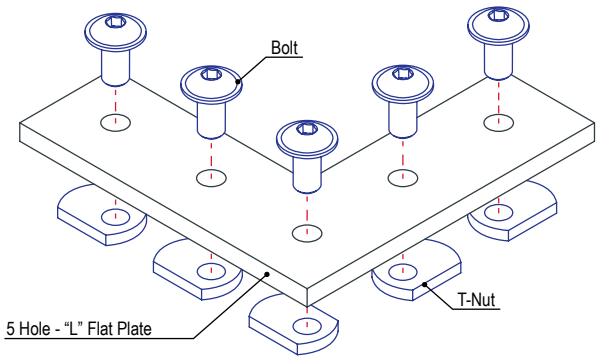

External Fasteners

5 Hole - "T" Flat Plate

- No machining required
- Pre-load to simplify assembly
- Reconfigurable, reusable
- Creates 90º angle between profiles

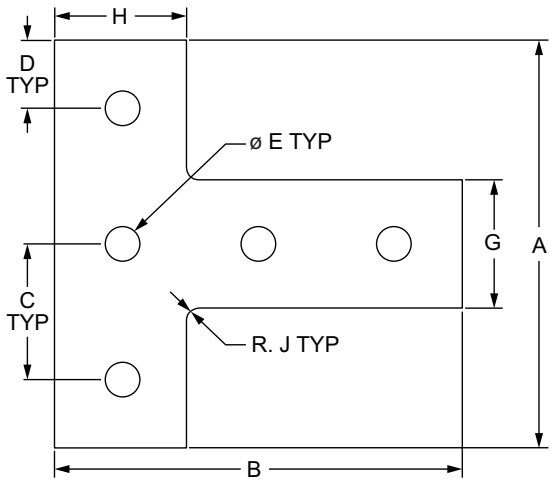

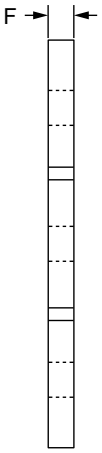

Part No.	Series	Material	Alloy	Finish	A	B	C	D	E	F	G	H	J	Weight
4080	10	Aluminum	6005A – T61	Clear Anodize	3.000"	3.000"	1.000"	.500"	.257"	.188"	.942"	.971"	.094"	.081 lb
4080-Black	10			Black Anodize	3.000"	3.000"	1.000"	.500"	.257"	.188"	.942"	.971"	.094"	.081 lb
4480	15			Clear Anodize	4.500"	4.500"	1.500"	.750"	.328"	.250"	1.426"	1.463"	.125"	.247 lb
4480-Black	15			Black Anodize	4.500"	4.500"	1.500"	.750"	.328"	.250"	1.426"	1.463"	.125"	.247 lb
20-4080	20			Clear Anodize	60.00mm	60.00mm	20.00mm	10.00mm	5.56mm	4.00mm	18.00mm	19.00mm	2.38mm	.0189 kg
20-4080-Black	20			Black Anodize	60.00mm	60.00mm	20.00mm	10.00mm	5.56mm	4.00mm	18.00mm	19.00mm	2.38mm	.0189 kg
25-4080	25			Clear Anodize	75.00mm	75.00mm	25.00mm	12.50mm	6.30mm	4.00mm	23.00mm	24.00mm	2.38mm	.0303 kg
25-4080-Black	25			Black Anodize	75.00mm	75.00mm	25.00mm	12.50mm	6.30mm	4.00mm	23.00mm	24.00mm	2.38mm	.0303 kg
30-4480	30			Clear Anodize	90.00mm	90.00mm	30.00mm	15.00mm	6.81mm	4.00mm	28.00mm	29.00mm	3.18mm	.0445 kg
30-4480-Black	30			Black Anodize	90.00mm	90.00mm	30.00mm	15.00mm	6.81mm	4.00mm	28.00mm	29.00mm	3.18mm	.0445 kg
40-4480	40			Clear Anodize	120.00mm	120.00mm	40.00mm	20.00mm	8.33mm	6.00mm	38.00mm	39.00mm	4.76mm	.1211 kg
40-4480-Black	40			Black Anodize	120.00mm	120.00mm	40.00mm	20.00mm	8.33mm	6.00mm	38.00mm	39.00mm	4.76mm	.1211 kg
45-4480	45			Clear Anodize	135.00mm	135.00mm	45.00mm	22.50mm	8.33mm	6.00mm	43.00mm	44.00mm	4.76mm	.1550 kg
45-4480-Black	45			Black Anodize	135.00mm	135.00mm	45.00mm	22.50mm	8.33mm	6.00mm	43.00mm	44.00mm	4.76mm	.1550 kg

Suggested Hardware (Mount to T-Slot)

Part No.	Series	Qty.	Bolt	T-Nut
3321	10	5	1/4-20 x 1/2" FBHSCS	Economy
3320	15	5	5/16-18 x 11/16" FBHSCS	Economy
75-3656	20	5	M5 x 10mm BHSCS	Economy
75-3404	25	5	M6 x 10mm BHSCS	Economy
75-3600	30	5	M6 x 12mm BHSCS	Drop-in
75-3422	40	5	M8 x 16mm BHSCS	Economy
75-3619	45	5	M8 x 18mm BHSCS	Drop-in

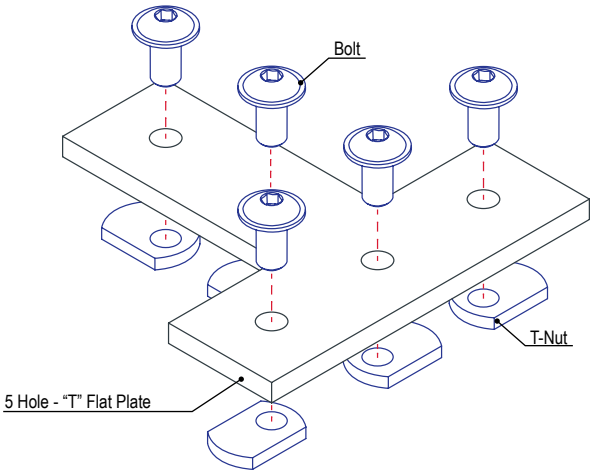

80/20 BUILD YOUR IDEA
More on 80/20® products available at 8020.net

2 Hole - Lite Inside Corner Bracket

- No machining required
- Pre-load to simplify assembly
- Reconfigurable, reusable

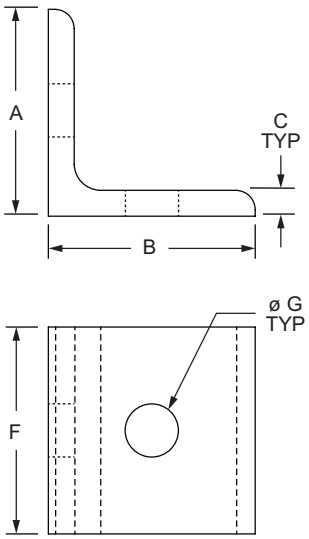

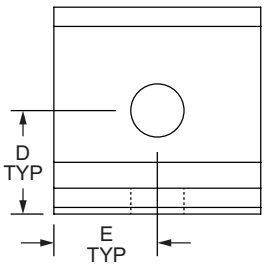

Part No.	Series	Material	Alloy	Finish	A	B	C	D	E	F	G	Weight
4108	10	Aluminum	6005A – T61	Clear Anodize	1.000"	1.000"	.125"	.500"	.500"	1.000"	.257"	.021 lb
4108-Black	10			Black Anodize	1.000"	1.000"	.125"	.500"	.500"	1.000"	.257"	.021 lb
25-4108	25			Clear Anodize	25.00mm	25.00mm	3.00mm	12.50mm	12.50mm	25.00mm	6.30mm	.0086 kg
25-4108-Black	25			Black Anodize	25.00mm	25.00mm	3.00mm	12.50mm	12.50mm	25.00mm	6.30mm	.0086 kg

Suggested Hardware (Mount to T-Slot)

Part No.	Series	Qty.	Bolt	T-Nut
3386	10	2	1/4-20 x 3/8" FBHSCS	Economy
75-3404	25	2	M6 x 10mm BHSCS	Economy

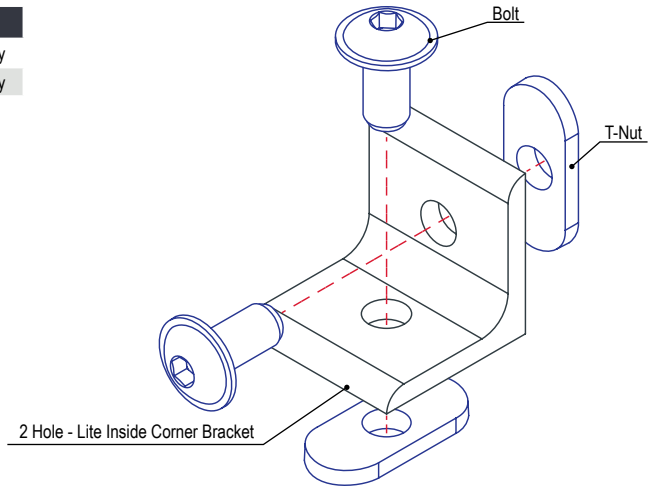

External Fasteners

2 Hole - Inside Corner Bracket

- No machining required
- Pre-load to simplify assembly
- Reconfigurable, reusable

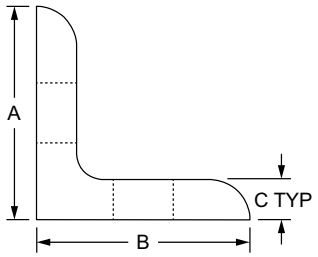

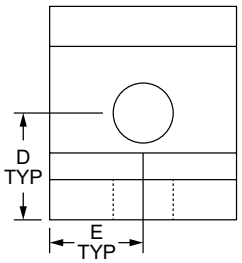

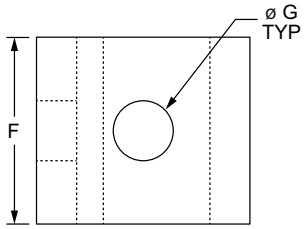

Part No.	Series	Material	Alloy	Finish	A	B	C	D	E	F	G	Weight
4119	10	Aluminum	6005A – T61	Clear Anodize	1.000"	1.000"	.188"	.500"	.438"	.875"	.281"	.025 lb
4119-Black	10			Black Anodize	1.000"	1.000"	.188"	.500"	.438"	.875"	.281"	.025 lb
4302	15 RT			Clear Anodize	1.500"	1.500"	.250"	.750"	.655"	1.310"	.328"	.081 lb
4302-Black	15 RT			Black Anodize	1.500"	1.500"	.250"	.750"	.655"	1.310"	.328"	.081 lb
20-4119	20			Clear Anodize	20.00mm	20.00mm	3.00mm	10.00mm	9.00mm	18.00mm	5.56mm	.0049 kg
20-4119-Black	20			Black Anodize	20.00mm	20.00mm	3.00mm	10.00mm	9.00mm	18.00mm	5.56mm	.0049 kg
25-4119	25			Clear Anodize	25.00mm	25.00mm	4.00mm	12.50mm	11.00mm	22.00mm	6.80mm	.0095 kg
25-4119-Black	25			Black Anodize	25.00mm	25.00mm	4.00mm	12.50mm	11.00mm	22.00mm	6.80mm	.0095 kg
30-4302	30			Clear Anodize	30.00mm	30.00mm	4.00mm	15.00mm	13.50mm	27.00mm	6.81mm	.0153 kg
30-4302-Black	30			Black Anodize	30.00mm	30.00mm	4.00mm	15.00mm	13.50mm	27.00mm	6.81mm	.0153 kg
40-4302	40			Clear Anodize	40.00mm	40.00mm	6.00mm	20.00mm	18.00mm	36.00mm	8.30mm	.0408 kg
40-4302-Black	40			Black Anodize	40.00mm	40.00mm	6.00mm	20.00mm	18.00mm	36.00mm	8.30mm	.0408 kg
45-4302	45			Clear Anodize	45.00mm	45.00mm	6.00mm	22.50mm	21.00mm	42.00mm	8.33mm	.0543 kg
45-4302-Black	45			Black Anodize	45.00mm	45.00mm	6.00mm	22.50mm	21.00mm	42.00mm	8.33mm	.0543 kg

Suggested Hardware (Mount to T-Slot)

Series	Part No.	Qty.	Bolt	Part No.	Qty.	T-Nut
10	3061	2	1/4-20 x 1/2" BHSCS	3382	2	Economy
15	3330	2	5/16-18 x 11/16" FBHSCS	3278	2	Economy
20	11-5308	2	M5 x 8mm BHSCS	14122	2	Economy
25	13-6310	2	M6 x 10mm BHSCS	3859	2	Economy
30	11-6312	2	M6 x 12mm BHSCS	13117	2	Drop-in
40	13-8316	2	M8 x 16mm BHSCS	3838	2	Economy
45	11-8318	2	M8 x 18mm BHSCS	13132	2	Drop-in

Suggested Hardware (Mount to Ready Tube)

Part No.	Series	Qty.	Bolt Assembly
3961	RT	2	5/16-18 x 2.00" BHSCS w/ Washer & Flanged Hex Nut

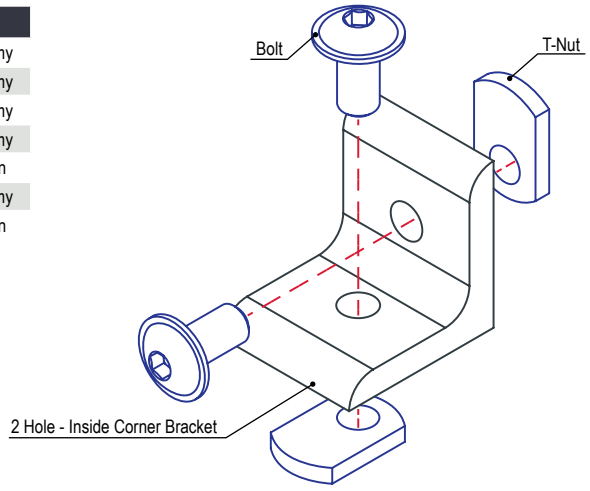

80/20 BUILD YOUR IDEA
More on 80/20® products available at 8020.net

2 Hole - Slotted Inside Corner Bracket

- No machining required
- Pre-load to simplify assembly
- Reconfigurable, reusable

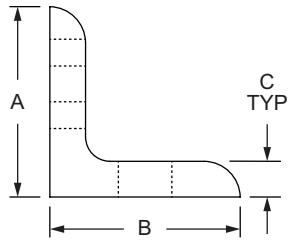

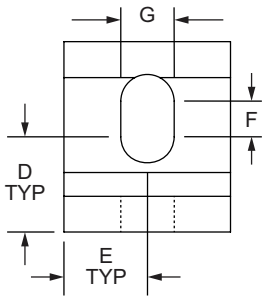

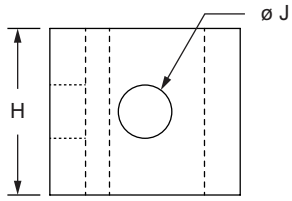

Part No.	Series	Material	Alloy	Finish	A	B	C	D	E	F	G	H	J	Weight
4265	10	Aluminum	6005A – T61	Clear Anodize	1.000"	1.000"	.188"	.500"	.438"	.188"	.281"	.875"	.281"	.024 lb
4265-Black	10			Black Anodize	1.000"	1.000"	.188"	.500"	.438"	.188"	.281"	.875"	.281"	.024 lb
4295	15 RT			Clear Anodize	1.500"	1.500"	.250"	.500"	.656"	.500"	.328"	1.312"	.328"	.078 lb
4295-Black	15 RT			Black Anodize	1.500"	1.500"	.250"	.500"	.656"	.500"	.328"	1.312"	.328"	.078 lb
25-4265	25			Clear Anodize	25.00mm	25.00mm	4.00mm	12.50mm	11.00mm	4.00mm	6.80mm	22.00mm	6.80mm	.0095 kg
25-4265-Black	25			Black Anodize	25.00mm	25.00mm	4.00mm	12.50mm	11.00mm	4.00mm	6.80mm	22.00mm	6.80mm	.0095 kg
40-4295	40			Clear Anodize	40.00mm	40.00mm	6.00mm	14.00mm	18.00mm	14.00mm	8.30mm	36.00mm	8.30mm	.0386 kg
40-4295-Black	40			Black Anodize	40.00mm	40.00mm	6.00mm	14.00mm	18.00mm	14.00mm	8.30mm	36.00mm	8.30mm	.0386 kg

Suggested Hardware (Mount to T-Slot)

Part No.	Series	Qty.	Bolt	T-Nut
3393	10	2	1/4-20 x 1/2" BHSCS	Economy
3320	15	2	5/16-18 x 11/16" FBHSCS	Economy
75-3404	25	2	M6 x 10mm BHSCS	Economy
75-3422	40	2	M8 x 16mm BHSCS	Economy

Suggested Hardware (Mount to Ready Tube)

Part No.	Series	Qty.	Bolt Assembly
3961	RT	2	5/16-18 x 2.00" BHSCS w/ Washer & Flanged Hex Nut

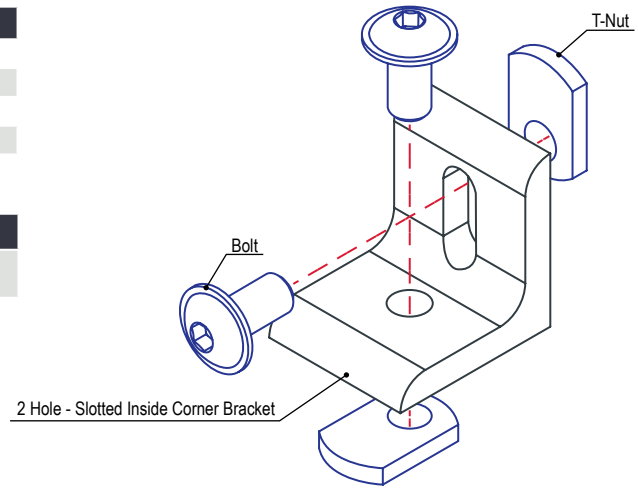

External Fasteners

2 Hole - Inside Corner Bracket with Single Support

- No machining required
- Pre-load to simplify assembly
- Reconfigurable, reusable

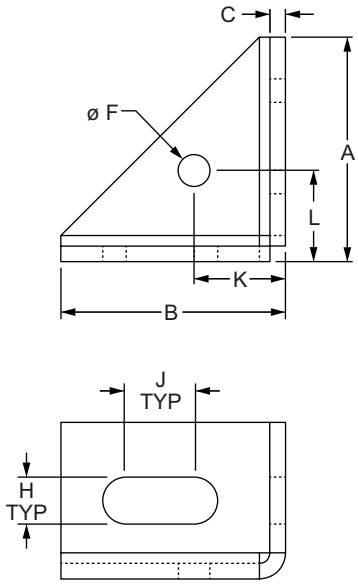

Part No.	Series	Material	Finish	A	B	C	D	E	F	G	H	J	K	L	Weight
14120	15 40	Steel	Zinc	43.00mm	43.00mm	3.00mm	17.50mm	15.00mm	6.00mm	30.00mm	9.00mm	13.00mm	17.50mm	17.50mm	.2626 kg

Suggested Hardware (Mount to T-Slot)

Part No.	Series	Qty.	Bolt	T-Nut
3450	15	2	5/16-18 x 1/2" SHCS	Economy
75-3624	40	2	M8 x 12mm SHCS	Slide-In

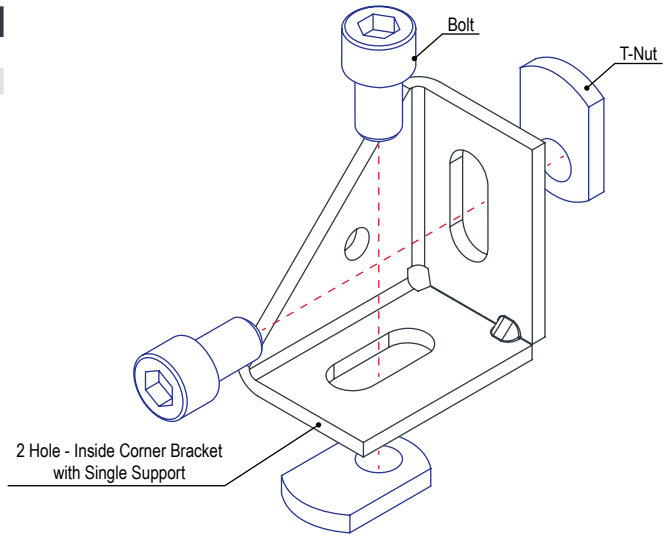

80/20 BUILD YOUR IDEA
More on 80/20® products
available at 8020.net

2 Hole - 18mm Slotted Inside Corner Bracket with Dual Support

- No machining required
- Corner bracket covers sold separately
- Pre-load to simplify assembly
- Optional slot tab for alignment and prevent rotation

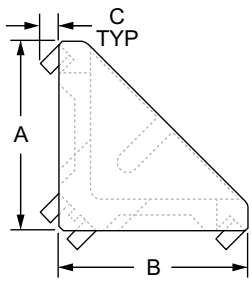

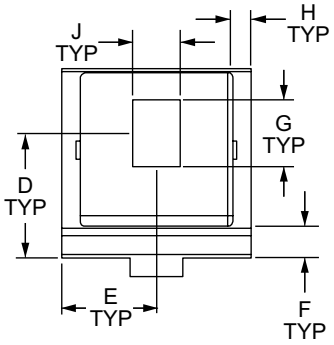

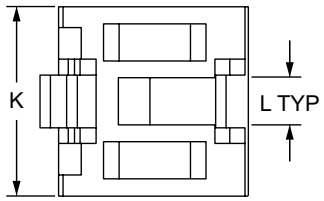

Part No.	Series	Slot Tab	Material	Finish	A	B	C	D	E	F	G	H	J	K	L	Weight
14059	10 20 25	No	Aluminum	Natural	18.00mm	18.00mm	—	10.50mm	9.00mm	3.00mm	7.00mm	2.00mm	5.30mm	18.00mm	—	.0043 kg
14060	20	Yes			18.00mm	18.00mm	2.00mm	10.50mm	9.00mm	3.00mm	7.00mm	2.00mm	5.30mm	18.00mm	4.75mm	.0044 kg
14061	10 25	Yes			18.00mm	18.00mm	2.00mm	10.50mm	9.00mm	3.00mm	7.00mm	2.00mm	5.30mm	18.00mm	6.00mm	.0045 kg

Suggested Hardware (Mount to T-Slot)

Part No.	Series	Qty.	Bolt	T-Nut
3426	10	2	10-32 x 3/8 BHSCS	Slide-In
75-3581	20	2	M5 x 8mm BHSCS	Econ. Slide-In
75-3401	25	2	M5 x 10mm SHCS	Econ. Slide-In

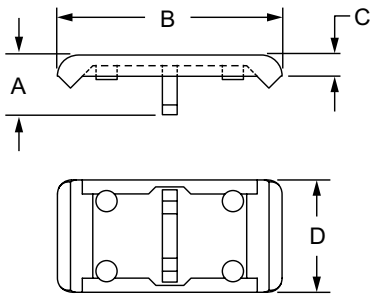

2 hole - 18mm Slotted Inside Corner Bracket Cover Cap

Part No.	Series	Material	A	B	C	D	Weight
12031	10 20 25	PA6 GF 30	9.50mm	28.60mm	2.00mm	17.60mm	.0018 kg

External Fasteners

2 Hole - 20mm Slotted Inside Corner Bracket with Dual Support

- No machining required
- Corner bracket covers sold separately
- Pre-load to simplify assembly
- Optional slot tab for alignment and prevent rotation

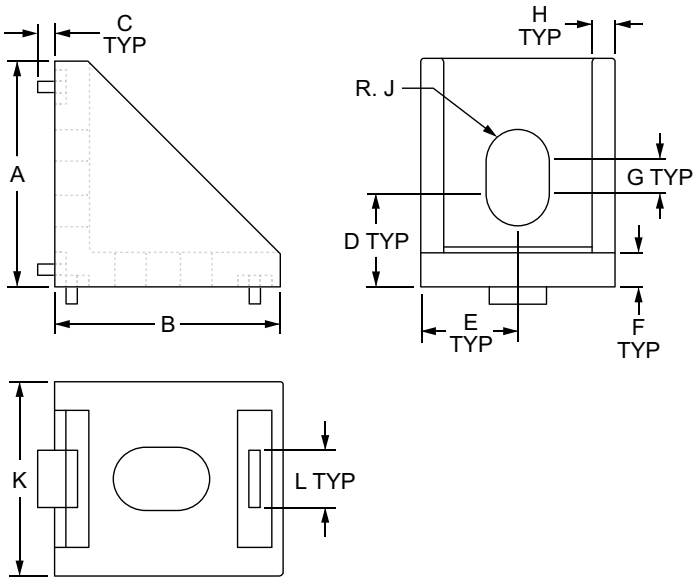

Part No.	Series	Material	Finish	A	B	C	D	E	F	G	H	J	K	L	Weight
14051	20	Zinc	Powder Coat	20.00mm	20.00mm	—	8.00mm	8.50mm	3.00mm	5.00mm	2.40mm	3.10mm	17.00mm	—	.0131 kg
14052	20		Powder Coat	20.00mm	20.00mm	1.00mm	8.00mm	8.50mm	3.00mm	5.00mm	2.40mm	3.10mm	17.00mm	5.00mm	.0104 kg
14053	20		Natural	20.00mm	20.00mm	1.00mm	8.00mm	8.50mm	3.00mm	5.50mm	2.40mm	2.75mm	17.00mm	5.00mm	.0125 kg
14054	10 25		Powder Coat	20.00mm	20.00mm	1.00mm	8.00mm	8.50mm	3.00mm	5.00mm	2.40mm	3.10mm	17.00mm	6.00mm	.0136 kg
14056	20		Natural	20.00mm	20.00mm	—	8.00mm	8.50mm	3.00mm	5.00mm	2.40mm	3.10mm	17.00mm	—	.0116 kg

Suggested Hardware (Mount to T-Slot)

Part No.	Series	Qty.	Bolt	T-Nut
3426	10	2	10-32 x 3/8 BHSCS	Slide-In
75-3581	20	2	M5 x 8mm BHSCS	Econ. Slide-In
75-3401	25	2	M5 x 10mm SHCS	Econ. Slide-In

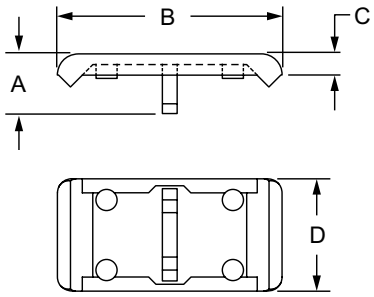

2 Hole - 20mm Slotted Inside Corner Bracket Cover Cap

Part No.	Series	Material	A	B	C	D	Weight
12030	10 20 25	PA6 GF 30	8.50mm	32.00mm	3.00mm	16.00mm	.0018 kg

80/20 BUILD YOUR IDEA
More on 80/20® products available at 8020.net

2 Hole - 27mm Slotted Inside Corner Bracket with Dual Support

- No machining required
- Corner bracket covers sold separately
- Pre-load to simplify assembly
- Optional slot tab for alignment and prevent rotation

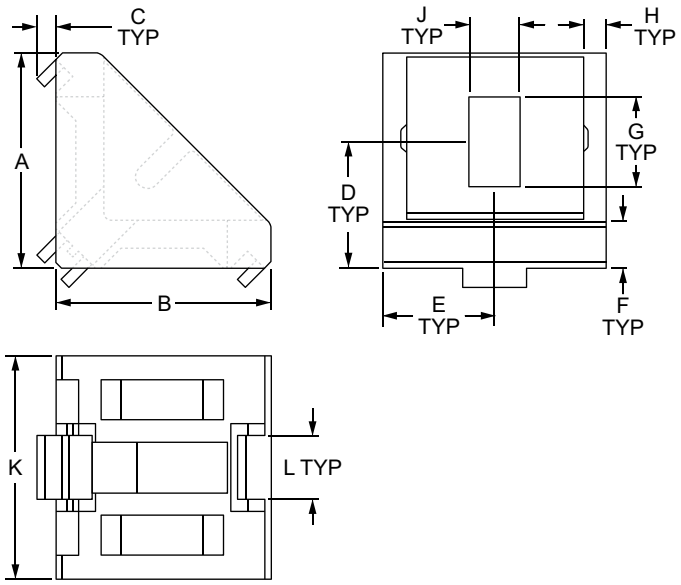

Part No.	Series	Material	Finish	A	B	C	D	E	F	G	H	J	K	L	Weight
14071	30	Aluminum	Natural	27.00mm	27.00mm	—	15.87mm	14.00mm	5.82mm	11.26mm	3.00mm	6.40mm	28.00mm	—	.0184 kg
14073	30			27.00mm	27.00mm	2.40mm	15.87mm	14.00mm	5.82mm	11.26mm	3.00mm	6.40mm	28.00mm	8.00mm	.0186 kg

Suggested Hardware (Mount to T-Slot)

Part No.	Series	Qty.	Bolt	T-Nut
75-3593	30	2	M6 x 14mm SHCS	Drop-In

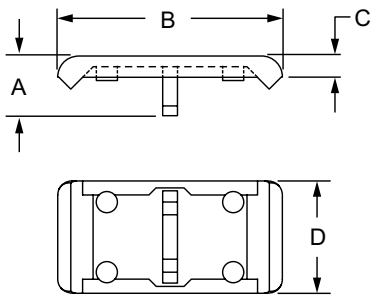

2 hole - 27mm Slotted Inside Corner Bracket Cover Cap

Part No.	Series	Material	A	B	C	D	Weight
12033	30	PA6 GF 30	13.00mm	45.00mm	6.00mm	27.00mm	.0059 kg

External Fasteners

2 Hole - 28mm Slotted Inside Corner Bracket with Dual Support

- No machining required
- Corner bracket covers sold separately
- Pre-load to simplify assembly
- Optional slot tab for alignment and prevent rotation

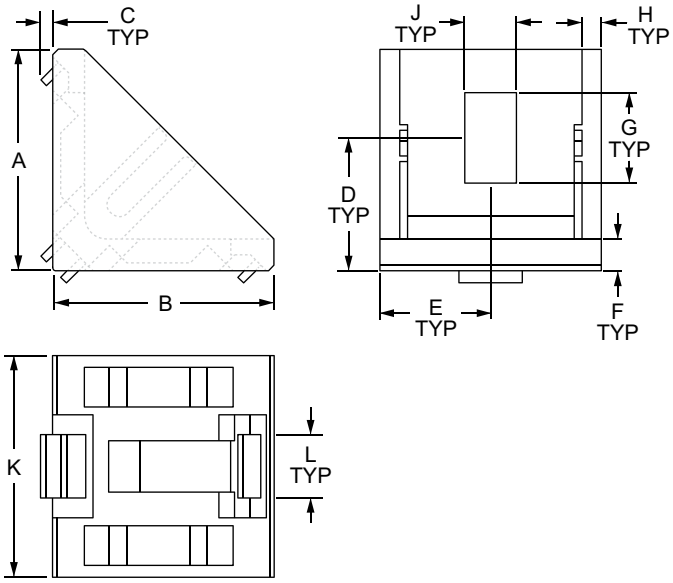

Part No.	Series	Material	Finish	A	B	C	D	E	F	G	H	J	K	L	Weight
14067	30	Zinc	Natural	28.00mm	28.00mm	—	16.79mm	14.00mm	4.00mm	11.43mm	2.50mm	6.50mm	28.00mm	—	.0382 kg
14062	30		Powder Coat	28.00mm	28.00mm	—	16.79mm	14.00mm	4.00mm	11.43mm	2.50mm	6.50mm	28.00mm	—	.0394 kg
14066	30		Natural	28.00mm	28.00mm	1.49mm	16.79mm	14.00mm	4.00mm	11.43mm	2.50mm	6.50mm	28.00mm	8.00mm	.0386 kg
14065	30		Powder Coat	28.00mm	28.00mm	1.49mm	16.79mm	14.00mm	4.00mm	11.43mm	2.50mm	6.50mm	28.00mm	8.00mm	.0400 kg

Suggested Hardware (Mount to T-Slot)

Part No.	Series	Qty.	Bolt	T-Nut
75-3598	30	2	M6 x 14mm SHCS	Drop-In

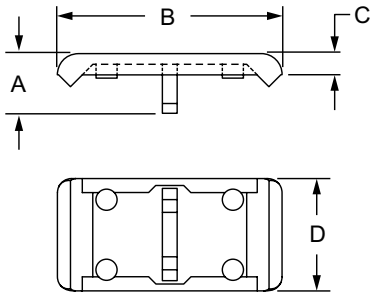

2 Hole - 28mm Slotted Inside Corner Bracket Cover Cap

Part No.	Series	Material	A	B	C	D	Weight
12032	30	PA6 GF 30	14.00mm	44.60mm	4.00mm	27.60mm	.0025 kg

80/20 BUILD YOUR IDEA
More on 80/20® products available at 8020.net

2 Hole - 39mm Slotted Inside Corner Bracket with Dual Support

- No machining required
- Corner bracket covers sold separately
- Pre-load to simplify assembly
- Optional slot tab for alignment and prevent rotation

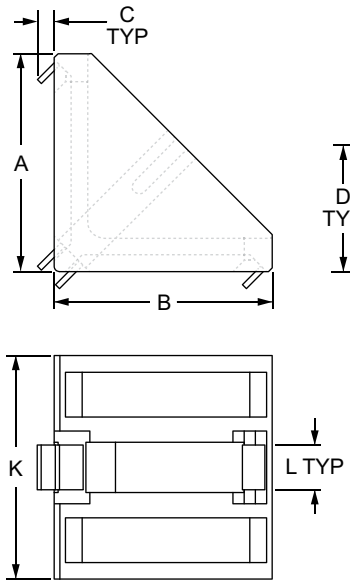

Part No.	Series	Material	Finish	A	B	C	D	E	F	G	H	J	K	L	Weight
14079	40	Zinc	Natural	39.00mm	39.00mm	—	22.47mm	20.00mm	6.00mm	23.05mm	3.00mm	9.00mm	40.00mm	—	.0948 kg
14074	40		Powder Coat	39.00mm	39.00mm	—	22.47mm	20.00mm	6.00mm	23.05mm	3.00mm	9.00mm	40.00mm	—	.0962 kg
14076	40		Natural	39.00mm	39.00mm	3.02mm	22.47mm	20.00mm	6.00mm	23.05mm	3.00mm	9.00mm	40.00mm	8.00mm	.0898 kg
14075	40		Powder Coat	39.00mm	39.00mm	3.02mm	22.47mm	20.00mm	6.00mm	23.05mm	3.00mm	9.00mm	40.00mm	8.00mm	.0981 kg
14078	45		Natural	39.00mm	39.00mm	3.02mm	22.47mm	20.00mm	6.00mm	23.05mm	3.00mm	9.00mm	40.00mm	10.00mm	.0966 kg
14077	45		Powder Coat	39.00mm	39.00mm	3.02mm	22.47mm	20.00mm	6.00mm	23.05mm	3.00mm	9.00mm	40.00mm	10.00mm	.0980 kg

Suggested Hardware (Mount to T-Slot)

Part No.	Series	Qty.	Bolt	T-Nut
75-3625	40	2	M8 x 16mm SHCS	Slide-In
75-3626	45	2	M8 x 18mm SHCS	Drop-In

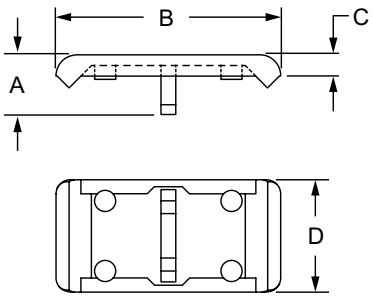

2 Hole - 39mm Slotted Inside Corner Bracket Cover Cap

Part No.	Series	Material	A	B	C	D	Weight
12034	40 45	PA6 GF 30	14.00mm	64.00mm	4.00mm	39.60mm	.0572 kg

External Fasteners

2 Hole - 42mm Slotted Inside Corner Bracket with Dual Support

- No machining required
- Corner bracket covers sold separately
- Pre-load to simplify assembly
- Optional slot tab for alignment and prevent rotation

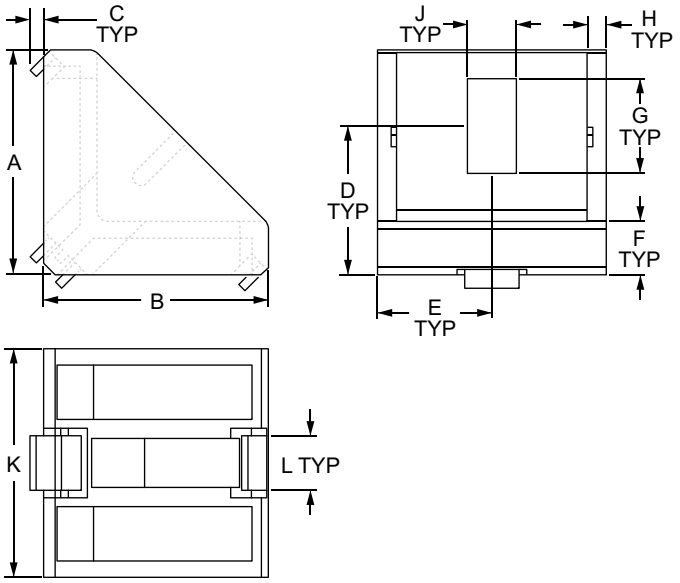

Part No.	Series	Material	Finish	A	B	C	D	E	F	G	H	J	K	L	Weight
14083	45	Aluminum	Natural	41.30mm	41.30mm	—	27.32mm	21.00mm	9.80mm	17.36mm	3.50mm	9.00mm	42.00mm	—	.0500 kg
14085	45	Aluminum		41.30mm	41.30mm	2.46mm	27.32mm	21.00mm	9.80mm	17.36mm	3.50mm	9.00mm	42.00mm	10.00mm	.0513 kg
14092	45	Zinc		41.30mm	41.30mm	2.46mm	27.32mm	21.00mm	9.80mm	17.36mm	3.50mm	9.00mm	42.00mm	10.00mm	.1287 kg

Suggested Hardware (Mount to T-Slot)

Part No.	Series	Qty.	Bolt	T-Nut
75-3630	45	2	M8 x 20mm SHCS	Drop-In

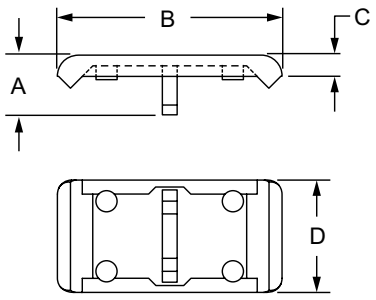

2 hole - 42mm Slotted Inside Corner Bracket Cover Cap

Part No.	Series	Material	A	B	C	D	Weight
12035	45	PA6 GF 30	20.00mm	70.00mm	3.00mm	42.20mm	.0173 kg

80/20 BUILD YOUR IDEA
More on 80/20® products available at 8020.net

3 Hole - Inside Corner Bracket

- No machining required
- Pre-load to simplify assembly
- Reconfigurable, reusable

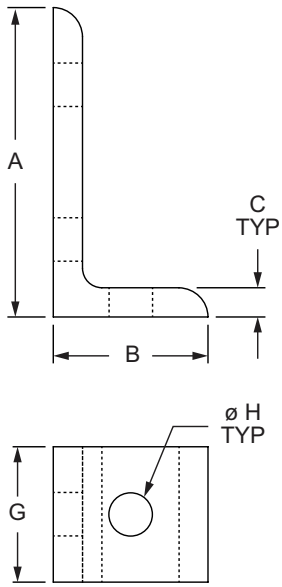

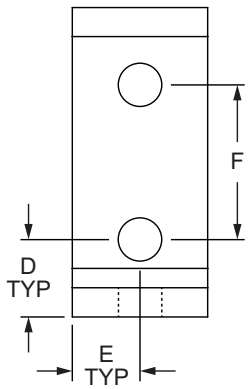

Part No.	Series	Material	Alloy	Finish	A	B	C	D	E	F	G	H	Weight
4176	10	Aluminum	6005A – T61	Clear Anodize	2.000"	1.000"	.188"	.500"	.438"	1.000"	.875"	.281"	.039 lb
4176-Black	10			Black Anodize	2.000"	1.000"	.188"	.500"	.438"	1.000"	.875"	.281"	.039 lb
4376	15 RT			Clear Anodize	3.000"	1.500"	.250"	.750"	.655"	1.500"	1.310"	.328"	.126 lb
4376-Black	15 RT			Black Anodize	3.000"	1.500"	.250"	.750"	.655"	1.500"	1.310"	.328"	.126 lb
20-4176	20			Clear Anodize	40.00mm	18.00mm	3.00mm	10.00mm	9.00mm	20.00mm	18.00mm	5.56mm	.0076 kg
20-4176-Black	20			Black Anodize	40.00mm	18.00mm	3.00mm	10.00mm	9.00mm	20.00mm	18.00mm	5.56mm	.0076 kg
25-4176	25			Clear Anodize	50.00mm	25.00mm	4.00mm	12.50mm	11.00mm	25.00mm	22.00mm	6.80mm	.0150 kg
25-4176-Black	25			Black Anodize	50.00mm	25.00mm	4.00mm	12.50mm	11.00mm	25.00mm	22.00mm	6.80mm	.0150 kg
30-4376	30			Clear Anodize	60.00mm	30.00mm	4.00mm	15.00mm	13.50mm	30.00mm	27.00mm	6.81mm	.0236 kg
30-4376-Black	30			Black Anodize	60.00mm	30.00mm	4.00mm	15.00mm	13.50mm	30.00mm	27.00mm	6.81mm	.0236 kg
40-4376	40			Clear Anodize	80.00mm	40.00mm	6.00mm	20.00mm	18.00mm	40.00mm	36.00mm	8.30mm	.0617 kg
40-4376-Black	40			Black Anodize	80.00mm	40.00mm	6.00mm	20.00mm	18.00mm	40.00mm	36.00mm	8.30mm	.0617 kg
45-4376	45			Clear Anodize	90.00mm	45.00mm	6.00mm	22.50mm	21.00mm	45.00mm	42.00mm	8.33mm	.0841 kg
45-4376-Black	45			Black Anodize	90.00mm	45.00mm	6.00mm	22.50mm	21.00mm	45.00mm	42.00mm	8.33mm	.0841 kg

Suggested Hardware (Mount to T-Slot)

Series	Part No.	Qty.	Bolt	Part No.	Qty.	T-Nut
10	3061	3	1/4-20 x 1/2" BHSCS	3382	3	Economy
15	3330	3	5/16-18 x 11/16" FBHSCS	3278	3	Economy
20	11-5308	3	M5 x 8mm BHSCS	14122	3	Economy
25	13-6310	3	M6 x 10mm BHSCS	3859	3	Economy
30	11-6312	3	M6 x 12mm BHSCS	13117	3	Drop-in
40	13-8316	3	M8 x 16mm BHSCS	3838	3	Economy
45	11-8318	3	M8 x 18mm BHSCS	13132	3	Drop-in

Suggested Hardware (Mount to Ready Tube)

Part No.	Series	Qty.	Bolt Assembly
3961	RT	3	5/16-18 x 2.00" BHSCS w/ Washer & Flanged Hex Nut

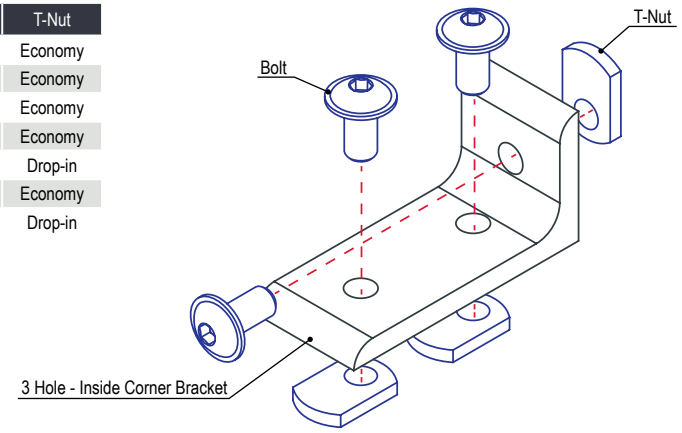

External Fasteners

3 Hole - Slotted Inside Corner Bracket

- No machining required
- Pre-load to simplify assembly
- Reconfigurable, reusable

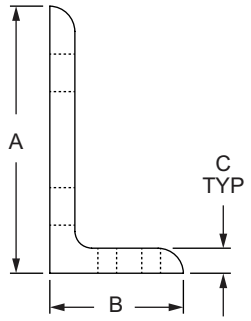

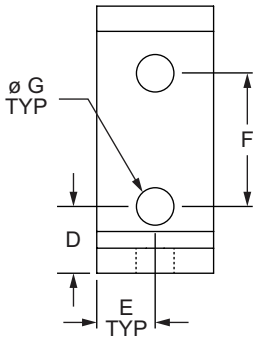

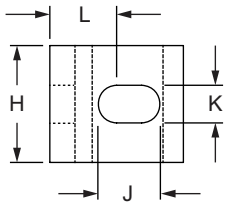

Part No.	Series	Material	Alloy	Finish	A	B	C	D	E	F	G	H	J	K	L	Weight
4250	10	Aluminum	6005A – T61	Clear Anodize	2.000"	1.000"	.188"	.500"	.438"	1.000"	.281"	.875"	.469"	.281"	.500"	.039 lb
4250-Black	10			Black Anodize	2.000"	1.000"	.188"	.500"	.438"	1.000"	.281"	.875"	.469"	.281"	.500"	.039 lb
4280	15 RT			Clear Anodize	3.000"	1.500"	.250"	.750"	.656"	1.500"	.328"	1.312"	.828"	.328"	.500"	.121 lb
4280-Black	15 RT			Black Anodize	3.000"	1.500"	.250"	.750"	.656"	1.500"	.328"	1.312"	.828"	.328"	.500"	.121 lb
25-4250	25			Clear Anodize	50.00mm	25.00mm	4.00mm	12.50mm	11.00mm	25.00mm	6.80mm	22.00mm	10.80mm	6.80mm	12.50mm	.0145 kg
25-4250-Black	25			Black Anodize	50.00mm	25.00mm	4.00mm	12.50mm	11.00mm	25.00mm	6.80mm	22.00mm	10.80mm	6.80mm	12.50mm	.0145 kg
40-4280	40			Clear Anodize	80.00mm	40.00mm	6.00mm	20.00mm	18.00mm	40.00mm	8.30mm	36.00mm	22.30mm	8.30mm	14.00mm	.0599 kg
40-4280-Black	40			Black Anodize	80.00mm	40.00mm	6.00mm	20.00mm	18.00mm	40.00mm	8.30mm	36.00mm	22.30mm	8.30mm	14.00mm	.0599 kg

Suggested Hardware (Mount to T-Slot)

Part No.	Series	Qty.	Bolt	T-Nut
3393	10	3	1/4-20 x 1/2" BHSCS	Economy
3320	15	3	5/16-18 x 11/16" FBHSCS	Economy
75-3404	25	3	M6 x 10mm BHSCS	Economy
75-3422	40	3	M8 x 16mm BHSCS	Economy

Suggested Hardware (Mount to Ready Tube)

Part No.	Series	Qty.	Bolt Assembly
3961	RT	3	5/16-18 x 2.00" BHSCS w/ Washer & Flanged Hex Nut

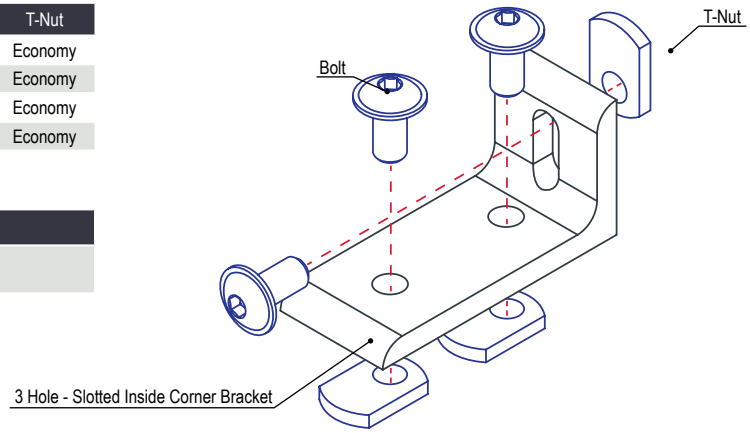

80/20 BUILD YOUR IDEA
More on 80/20® products available at 8020.net

4 Hole - Wide Inside Corner Bracket

- No machining required
- Pre-load to simplify assembly
- Reconfigurable, reusable

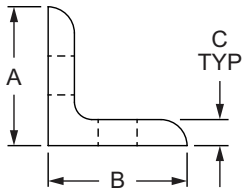

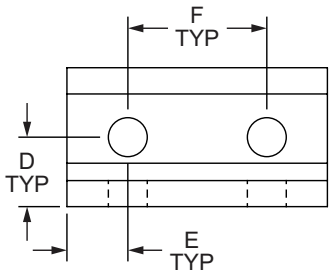

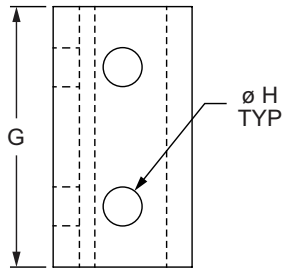

Part No.	Series	Material	Alloy	Finish	A	B	C	D	E	F	G	H	Weight
4113	10	Aluminum	6005A – T61	Clear Anodize	1.000"	1.000"	.188"	.500"	.438"	1.000"	1.875"	.281"	.054 lb
4113-Black	10			Black Anodize	1.000"	1.000"	.188"	.500"	.438"	1.000"	1.875"	.281"	.054 lb
4303	15			Clear Anodize	1.500"	1.500"	.250"	.750"	.656"	1.500"	2.810"	.328"	.175 lb
4303-Black	15			Black Anodize	1.500"	1.500"	.250"	.750"	.656"	1.500"	2.810"	.328"	.175 lb
20-4113	20			Clear Anodize	20.00mm	20.00mm	3.00mm	10.00mm	9.00mm	20.00mm	38.00mm	5.56mm	.0104 kg
20-4113-Black	20			Black Anodize	20.00mm	20.00mm	3.00mm	10.00mm	9.00mm	20.00mm	38.00mm	5.56mm	.0104 kg
25-4113	25			Clear Anodize	25.00mm	25.00mm	4.00mm	12.50mm	11.00mm	25.00mm	47.00mm	6.80mm	.0209 kg
25-4113-Black	25			Black Anodize	25.00mm	25.00mm	4.00mm	12.50mm	11.00mm	25.00mm	47.00mm	6.80mm	.0209 kg
30-4303	30			Clear Anodize	30.00mm	30.00mm	4.00mm	15.00mm	13.50mm	30.00mm	57.00mm	6.81mm	.0324 kg
30-4303-Black	30			Black Anodize	30.00mm	30.00mm	4.00mm	15.00mm	13.50mm	30.00mm	57.00mm	6.81mm	.0324 kg
40-4303	40			Clear Anodize	40.00mm	40.00mm	6.00mm	20.00mm	18.00mm	40.00mm	76.00mm	8.30mm	.0862 kg
40-4303-Black	40			Black Anodize	40.00mm	40.00mm	6.00mm	20.00mm	18.00mm	40.00mm	76.00mm	8.30mm	.0862 kg
45-4303	45			Clear Anodize	45.00mm	45.00mm	6.00mm	22.50mm	21.00mm	45.00mm	87.00mm	8.33mm	.1127 kg
45-4303-Black	45			Black Anodize	45.00mm	45.00mm	6.00mm	22.50mm	21.00mm	45.00mm	87.00mm	8.33mm	.1127 kg

Suggested Hardware (Mount to T-Slot)

Series	Part No.	Qty.	Bolt	Part No.	Qty.	T-Nut
10	3061	4	1/4-20 x 1/2" BHSCS	3382	4	Economy
15	3330	4	5/16-18 x 11/16" FBHSCS	3278	4	Economy
20	11-5308	4	M5 x 8mm BHSCS	14122	4	Economy
25	13-6310	4	M6 x 10mm BHSCS	3859	4	Economy
30	11-6312	4	M6 x 12mm BHSCS	13117	4	Drop-in
40	13-8316	4	M8 x 16mm BHSCS	3838	4	Economy
45	11-8318	4	M8 x 18mm BHSCS	13132	4	Drop-in

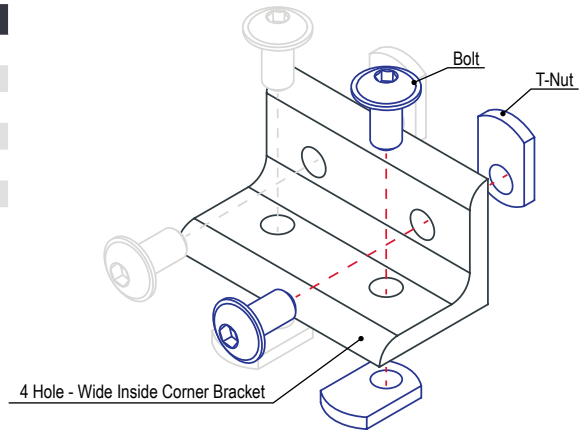

External Fasteners

4 Hole - Tall Inside Corner Bracket

- No machining required
- Pre-load to simplify assembly
- Reconfigurable, reusable

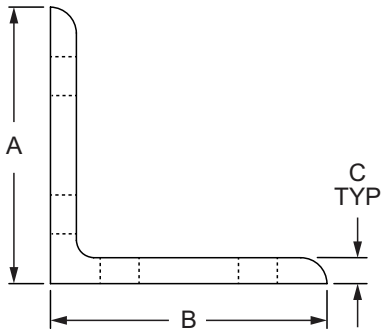

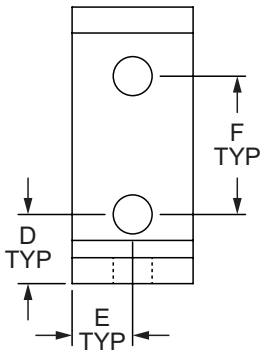

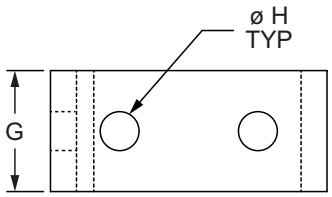

Part No.	Series	Material	Alloy	Finish	A	B	C	D	E	F	G	H	Weight
4115	10	Aluminum	6005A – T61	Clear Anodize	2.000"	2.000"	.188"	.500"	.438"	1.000"	.875"	.281"	.053 lb
4115-Black	10			Black Anodize	2.000"	2.000"	.188"	.500"	.438"	1.000"	.875"	.281"	.053 lb
4301	15 RT			Clear Anodize	3.000"	3.000"	.250"	.750"	.655"	1.500"	1.310"	.328"	.176 lb
4301-Black	15 RT			Black Anodize	3.000"	3.000"	.250"	.750"	.655"	1.500"	1.310"	.328"	.176 lb
25-4115	25			Clear Anodize	50.00mm	50.00mm	4.00mm	12.50mm	11.00mm	25.00mm	22.00mm	6.80mm	.0204 kg
25-4115-Black	25			Black Anodize	50.00mm	50.00mm	4.00mm	12.50mm	11.00mm	25.00mm	22.00mm	6.80mm	.0204 kg
40-4301	40			Clear Anodize	80.00mm	80.00mm	6.00mm	20.00mm	18.00mm	40.00mm	36.00mm	8.30mm	.0853 kg
40-4301-Black	40			Black Anodize	80.00mm	80.00mm	6.00mm	20.00mm	18.00mm	40.00mm	36.00mm	8.30mm	.0853 kg
45-4301	45			Clear Anodize	90.00mm	90.00mm	6.00mm	22.50mm	21.00mm	45.00mm	42.00mm	8.33mm	.1138 kg
45-4301-Black	45			Black Anodize	90.00mm	90.00mm	6.00mm	22.50mm	21.00mm	45.00mm	42.00mm	8.33mm	.1138 kg

Suggested Hardware (Mount to T-Slot)

Part No.	Series	Qty.	Bolt	T-Nut
3393	10	4	1/4-20 x 1/2" BHSCS	Economy
3320	15	4	5/16-18 x 11/16" FBHSCS	Economy
75-3404	25	4	M6 x 10mm BHSCS	Economy
75-3422	40	4	M8 x 16mm BHSCS	Economy
75-3619	45	4	M8 x 18mm BHSCS	Drop-In

Suggested Hardware (Mount to Ready Tube)

Part No.	Series	Qty.	Bolt Assembly
3961	RT	4	5/16-18 x 2.00" BHSCS w/ Washer & Flanged Hex Nut

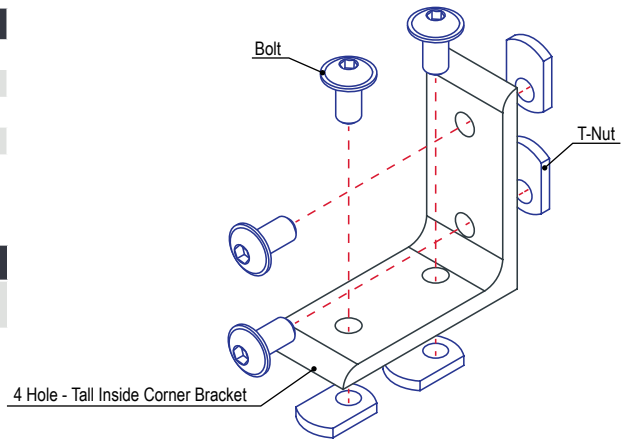

80/20 BUILD YOUR IDEA
More on 80/20® products available at 8020.net

4 Hole - Inside Corner Bracket with Single Support

- No machining required
- Corner bracket covers sold separately
- Pre-load to simplify assembly
- Optional slot tab for alignment and prevent rotation

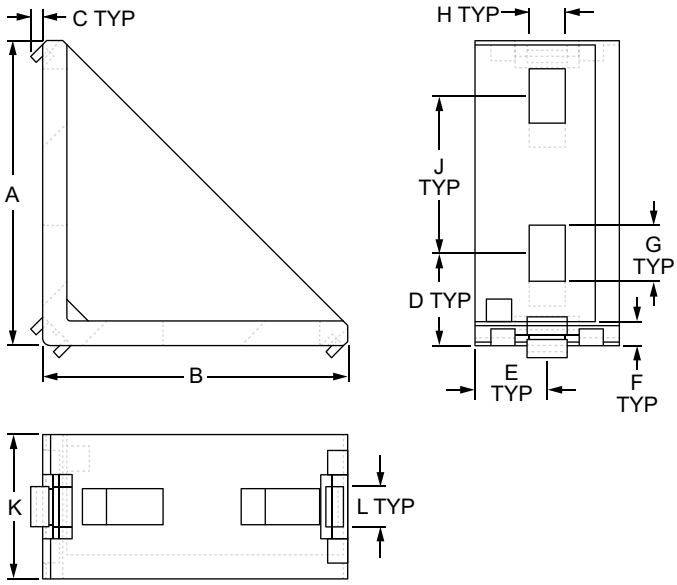

Part No.	Series	Material	Finish	A	B	C	D	E	F	G	H	J	K	L	Weight
14057	20	Aluminum	Natural	38.00mm	38.00mm	1.48mm	11.50mm	9.00mm	3.00mm	7.05mm	5.20mm	19.65mm	18.00mm	5.00mm	.0124 kg
14058	10 25			38.00mm	38.00mm	1.48mm	11.50mm	9.00mm	3.00mm	7.05mm	5.20mm	19.65mm	18.00mm	6.00mm	.0121 kg
14068	30			57.00mm	57.00mm	—	15.62mm	14.00mm	6.00mm	10.80mm	6.20mm	29.90mm	28.00mm	—	.0569 kg
14070	30			57.00mm	57.00mm	1.98mm	15.62mm	14.00mm	6.00mm	10.80mm	6.20mm	29.90mm	28.00mm	8.00mm	.0577 kg
14080	15 40			76.00mm	76.00mm	—	23.50mm	19.00mm	8.50mm	23.00mm	9.00mm	34.50mm	38.00mm	—	.1139 kg
14081	15 40			76.00mm	76.00mm	3.82mm	23.50mm	19.00mm	8.50mm	23.00mm	9.00mm	34.50mm	38.00mm	8.00mm	.1121 kg
14086	45			86.00mm	86.00mm	—	28.00mm	21.50mm	9.50mm	22.90mm	9.00mm	40.00mm	43.00mm	—	.1554 kg
14088	45			86.00mm	86.00mm	3.82mm	28.00mm	21.50mm	9.50mm	22.90mm	9.00mm	40.00mm	43.00mm	10.00mm	.1557 kg

Suggested Hardware (Mount to T-Slot)

Part No.	Series	Qty.	Bolt	T-Nut
3426	10	4	10-32 x 3/8 BHSCS	Slide-In
3455	15	4	5/16-18 x 3/4 SHCS	Slide-In
75-3581	20	4	M5 x 8mm BHSCS	Slide-In
75-3401	25	4	M5 x 10mm SHCS	Slide-In
75-3593	30	4	M6 x 14mm SHCS	Drop-In
75-3627	40	4	M8 x 18mm SHCS	Roll-In
75-3630	45	4	M8 x 20mm SHCS	Drop-In

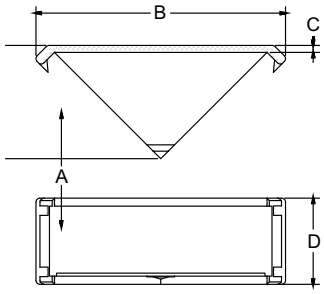

Black Nylon Cover Cap for 90 Degree Corner

Part No.	Series	Material	A	B	C	D	Weight
12299	45	NYLON	56.50mm	124.50mm	3.46mm	43.00mm	.0335 kg

External Fasteners

4 Hole - Inside Corner Bracket with Dual Support

- No machining required
- Corner bracket covers sold separately
- Pre-load to simplify assembly
- Optional slot tab for alignment and prevent rotation

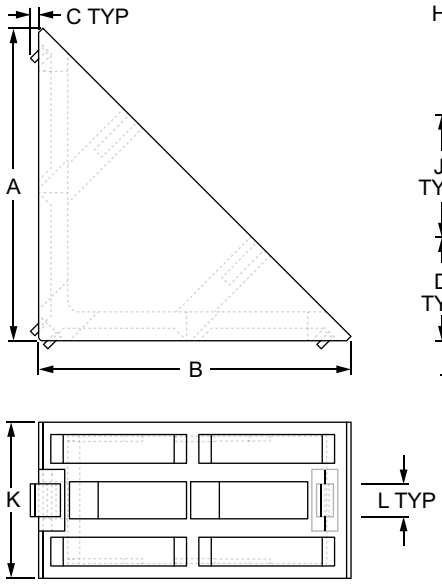

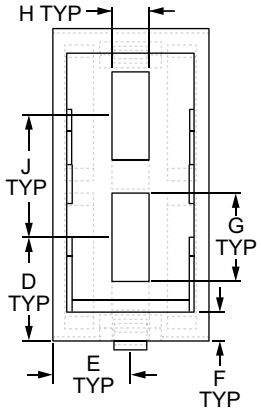

Part No.	Series	Material	Finish	A	B	C	D	E	F	G	H	J	K	L	Weight
14103	15 40 45	Zinc	Natural	76.00mm	76.00mm	—	25.25mm	19.00mm	6.97mm	21.50mm	9.00mm	29.50mm	38.00mm	—	.2622 kg
14098	15 40 45		Powder Coat	76.00mm	76.00mm	—	25.25mm	19.00mm	6.97mm	21.50mm	9.00mm	29.50mm	38.00mm	—	.2705 kg
14100	15 40		Natural	76.00mm	76.00mm	1.98mm	25.25mm	19.00mm	6.97mm	20.70mm	8.20mm	29.50mm	38.00mm	8.00mm	.2618 kg
14099	15 40		Powder Coat	76.00mm	76.00mm	1.98mm	25.25mm	19.00mm	6.97mm	20.70mm	8.20mm	29.50mm	38.00mm	8.00mm	.2068 kg
14102	45		Natural	76.00mm	76.00mm	1.98mm	25.25mm	19.00mm	6.97mm	21.50mm	9.00mm	29.50mm	38.00mm	10.00mm	.2673 kg
14101	45		Powder Coat	76.00mm	76.00mm	1.98mm	25.25mm	19.00mm	6.97mm	21.50mm	9.00mm	29.50mm	38.00mm	10.00mm	.2693 kg

Suggested Hardware (Mount to T-Slot)

Part No.	Series	Qty.	Bolt	T-Nut
3455	15	4	5/16-18 x 3/4 SHCS	Slide-In
75-3627	40	4	M8 x18mm SHCS	Slide-In
75-3630	45	4	M8 x 20mm SHCS	Drop-In

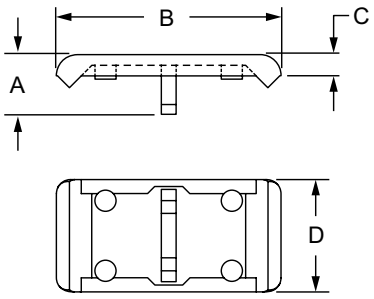

4 Hole - Inside Corner Bracket Cover Cap

Part No.	Series	Material	A	B	C	D	Weight
12038	15 40 45	PA6 GF 30	14.00mm	106.00mm	4.00mm	37.60mm	.0173 kg

80/20 BUILD YOUR IDEA
More on 80/20® products available at 8020.net

4 Hole - Tall Lite Inside Corner Bracket

- No machining required
- Pre-load to simplify assembly
- Reconfigurable, reusable

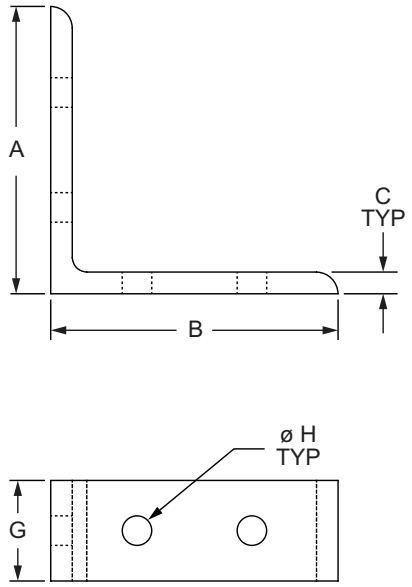

Part No.	Series	Material	Alloy	Finish	A	B	C	D	E	F	G	H	Weight
4101	10	Aluminum	6005A – T61	Clear Anodize	2.500"	2.500"	.188"	.750"	.438"	1.000"	.875"	.257"	.071 lb
4101-Black	10			Black Anodize	2.500"	2.500"	.188"	.750"	.438"	1.000"	.875"	.257"	.071 lb

Suggested Hardware (Mount to T-Slot)

Part No.	Series	Qty.	Bolt	T-Nut
3393	10	4	1/4-20 x 1/2" BHSCS	Economy

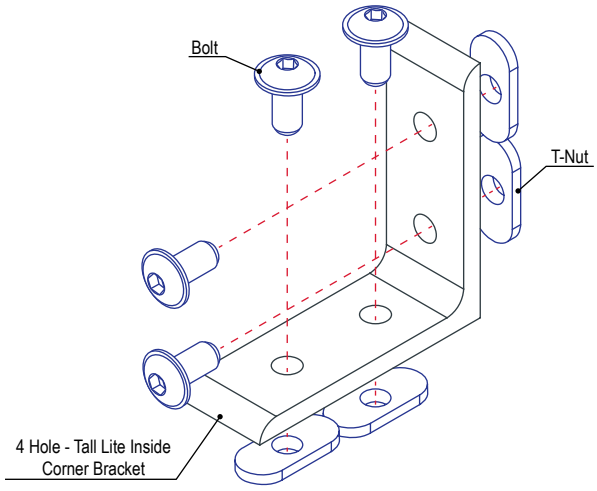

External Fasteners

4 Hole - Wide Slotted Inside Corner Bracket

- No machining required
- Pre-load to simplify assembly
- Reconfigurable, reusable

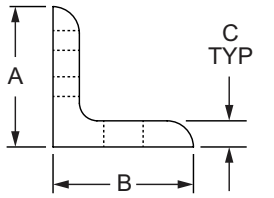

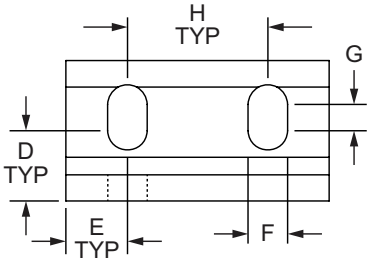

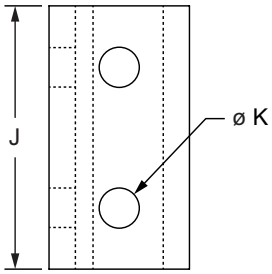

Part No.	Series	Material	Alloy	Finish	A	B	C	D	E	F	G	H	J	K	Weight
4260	10	Aluminum	6005A – T61	Clear Anodize	1.000"	1.000"	.188"	.500"	.438"	.281"	.188"	1.000"	1.875"	.281"	.052 lb
4260-Black	10			Black Anodize	1.000"	1.000"	.188"	.500"	.438"	.281"	.188"	1.000"	1.875"	.281"	.052 lb
4290	15			Clear Anodize	1.500"	1.500"	.250"	.500"	.656"	.328"	.500"	1.500"	2.812"	.328"	.167 lb
4290-Black	15			Black Anodize	1.500"	1.500"	.250"	.500"	.656"	.328"	.500"	1.500"	2.812"	.328"	.167 lb
25-4260	25			Clear Anodize	25.00mm	25.00mm	4.00mm	12.50mm	11.00mm	6.80mm	4.00mm	25.00mm	47.00mm	6.80mm	.0200 kg
25-4260-Black	25			Black Anodize	25.00mm	25.00mm	4.00mm	12.50mm	11.00mm	6.80mm	4.00mm	25.00mm	47.00mm	6.80mm	.0200 kg
40-4290	40			Clear Anodize	40.00mm	40.00mm	6.00mm	14.00mm	18.00mm	8.30mm	14.00mm	40.00mm	76.00mm	8.30mm	.0826 kg
40-4290-Black	40			Black Anodize	40.00mm	40.00mm	6.00mm	14.00mm	18.00mm	8.30mm	14.00mm	40.00mm	76.00mm	8.30mm	.0826 kg

Suggested Hardware (Mount to T-Slot)

Part No.	Series	Qty.	Bolt	T-Nut
3393	10	4	1/4-20 x 1/2" BHSCS	Economy
3320	15	4	5/16-18 x 11/16" FBHSCS	Economy
75-3404	25	4	M6 x 10mm BHSCS	Economy
75-3422	40	4	M8 x 16mm BHSCS	Economy

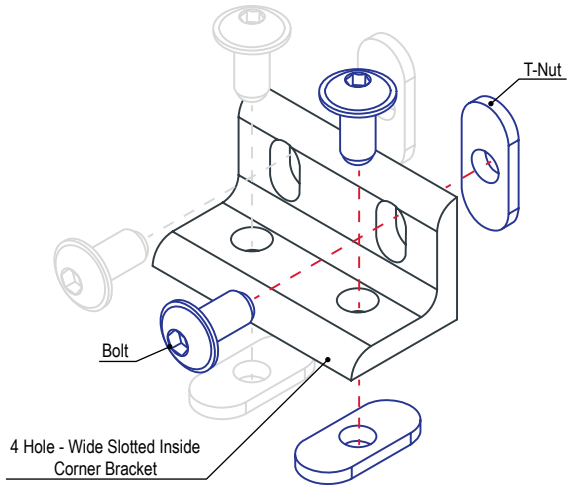

80/20 BUILD YOUR IDEA
More on 80/20® products
available at 8020.net

6 Hole - Tall Inside Corner Bracket

- No machining required
- Pre-load to simplify assembly
- Reconfigurable, reusable

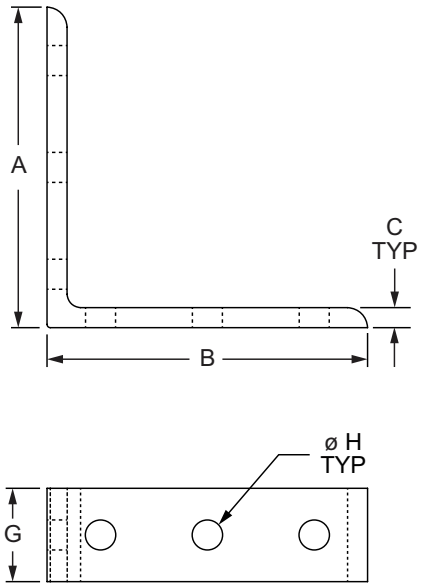

Part No.	Series	Material	Alloy	Finish	A	B	C	D	E	F	G	H	Weight
4013	10	Aluminum	6005A – T61	Clear Anodize	3.000"	3.000"	.188"	.500"	.438"	1.000"	.875"	.281"	.083 lb
4013-Black	10			Black Anodize	3.000"	3.000"	.188"	.500"	.438"	1.000"	.875"	.281"	.083 lb
4413	15			Clear Anodize	4.500"	4.500"	.250"	.750"	.656"	1.500"	1.312"	.328"	.260 lb
4413-Black	15			Black Anodize	4.500"	4.500"	.250"	.750"	.656"	1.500"	1.312"	.328"	.260 lb

Suggested Hardware (Mount to T-Slot)

Part No.	Series	Qty.	Bolt	T-Nut
3393	10	6	1/4-20 x 1/2" BHSCS	Economy
3320	15	6	5/16-18 x 11/16 FBHSCS	Economy

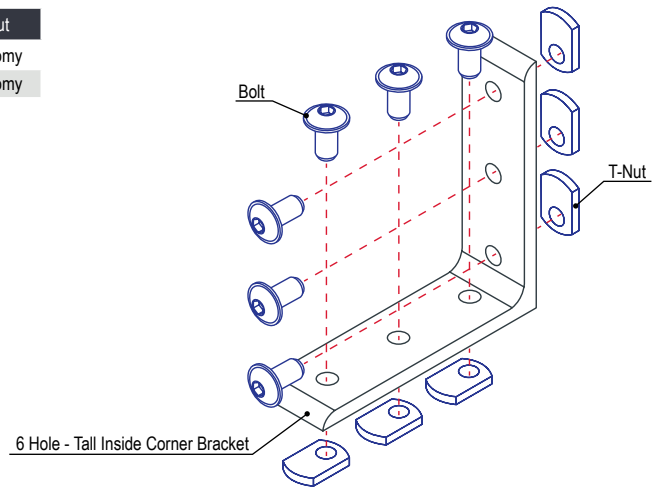

External Fasteners

6 Hole - Wide 2x4 Inside Corner Bracket

- No machining required
- Pre-load to simplify assembly
- Reconfigurable, reusable

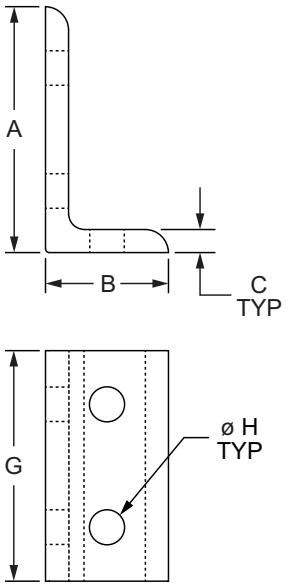

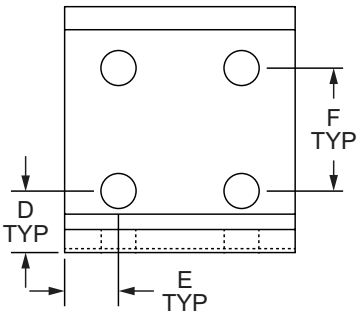

Part No.	Series	Material	Alloy	Finish	A	B	C	D	E	F	G	H	Weight
4175	10	Aluminum	6005A – T61	Clear Anodize	2.000"	1.000"	.188"	.500"	.437"	1.000"	1.875"	.281"	.085 lb
4175-Black	10			Black Anodize	2.000"	1.000"	.188"	.500"	.437"	1.000"	1.875"	.281"	.085 lb
4375	15			Clear Anodize	3.000"	1.500"	.250"	.750"	.654"	1.500"	2.810"	.328"	.277 lb
4375-Black	15			Black Anodize	3.000"	1.500"	.250"	.750"	.654"	1.500"	2.810"	.328"	.277 lb
25-4175	25			Clear Anodize	50.00mm	25.00mm	4.00mm	12.50mm	11.00mm	25.00mm	47.00mm	6.80mm	.0322 kg
25-4175-Black	25			Black Anodize	50.00mm	25.00mm	4.00mm	12.50mm	11.00mm	25.00mm	47.00mm	6.80mm	.0322 kg
40-4375	40			Clear Anodize	80.00mm	40.00mm	6.00mm	20.00mm	18.00mm	40.00mm	76.00mm	8.30mm	.1320 kg
40-4375-Black	40			Black Anodize	80.00mm	40.00mm	6.00mm	20.00mm	18.00mm	40.00mm	76.00mm	8.30mm	.1320 kg

Suggested Hardware (Mount to T-Slot)

Part No.	Series	Qty.	Bolt	T-Nut
3393	10	6	1/4-20 x 1/2" BHSCS	Economy
3320	15	6	5/16-18 x 11/16 FBHSCS	Economy
75-3404	25	6	M6 x 10mm BHSCS	Economy
75-3422	40	6	M8 x 16mm BHSCS	Economy

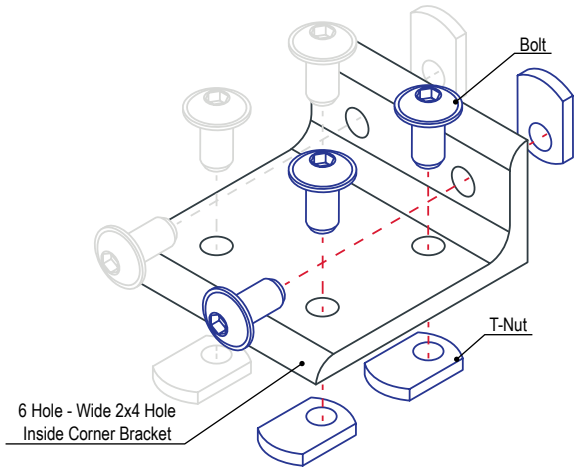

80/20 BUILD YOUR IDEA
More on 80/20® products available at 8020.net

6 Hole - Wide 2x4 Slotted Inside Corner Bracket

- No machining required
- Pre-load to simplify assembly
- Reconfigurable, reusable

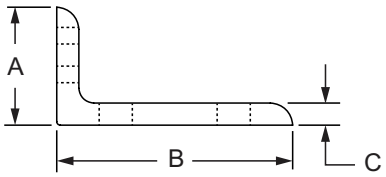

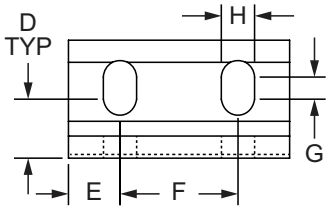

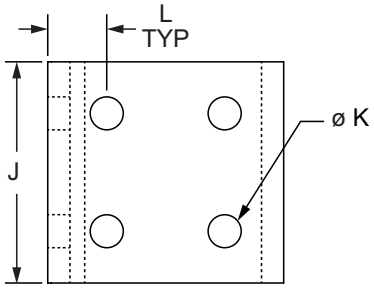

Part No.	Series	Material	Alloy	Finish	A	B	C	D	E	F	G	H	J	K	L	Weight
4286	10	Aluminum	6005A – T61	Clear Anodize	1.000"	2.000"	.188"	.500"	.438"	1.000"	.188"	.281"	1.875"	.281"	.500"	.084 lb
4286-Black	10			Black Anodize	1.000"	2.000"	.188"	.500"	.438"	1.000"	.188"	.281"	1.875"	.281"	.500"	.084 lb
4285	15			Clear Anodize	1.500"	3.000"	.250"	.500"	.656"	1.500"	.500"	.328"	2.810"	.328"	.750"	.262 lb
4285-Black	15			Black Anodize	1.500"	3.000"	.250"	.500"	.656"	1.500"	.500"	.328"	2.810"	.328"	.750"	.262 lb
25-4286	25			Clear Anodize	25.00mm	50.00mm	4.00mm	12.50mm	11.00mm	25.00mm	4.00mm	6.80mm	47.00mm	6.80mm	12.50mm	.0318 kg
25-4286-Black	25			Black Anodize	25.00mm	50.00mm	4.00mm	12.50mm	11.00mm	25.00mm	4.00mm	6.80mm	47.00mm	6.80mm	12.50mm	.0318 kg
40-4285	40			Clear Anodize	40.00mm	80.00mm	6.00mm	14.00mm	18.00mm	40.00mm	14.00mm	8.30mm	76.00mm	8.30mm	20.00mm	.1279 kg
40-4285-Black	40			Black Anodize	40.00mm	80.00mm	6.00mm	14.00mm	18.00mm	40.00mm	14.00mm	8.30mm	76.00mm	8.30mm	20.00mm	.1279 kg

Suggested Hardware (Mount to T-Slot)

Part No.	Series	Qty.	Bolt	T-Nut
3393	10	6	1/4-20 x 1/2" BHSCS	Economy
3320	15	6	5/16-18 x 11/16 FBHSCS	Economy
75-3404	25	6	M6 x 10mm BHSCS	Economy
75-3422	40	6	M8 x 16mm BHSCS	Economy

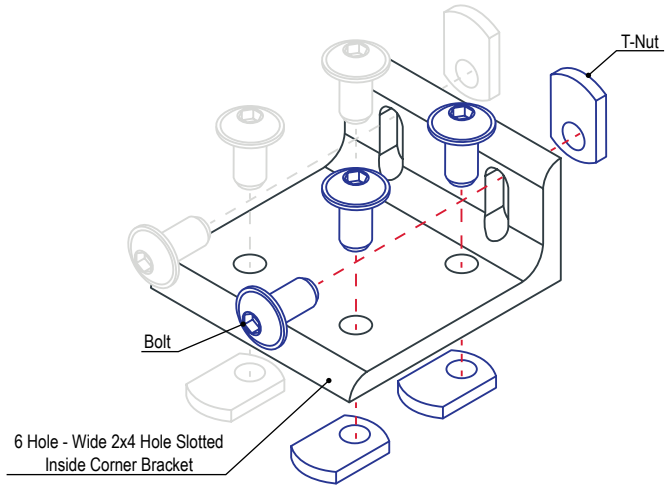

External Fasteners

6 Hole - Wide 3x3 Inside Corner Bracket

- No machining required
- Pre-load to simplify assembly
- Reconfigurable, reusable

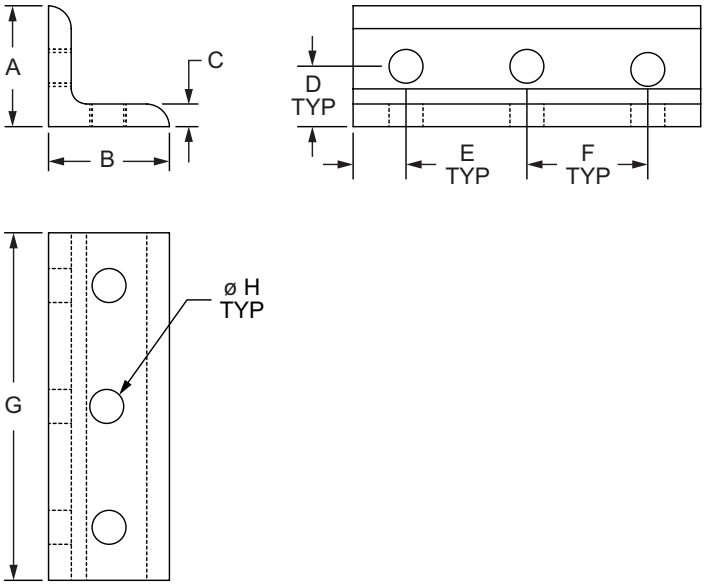

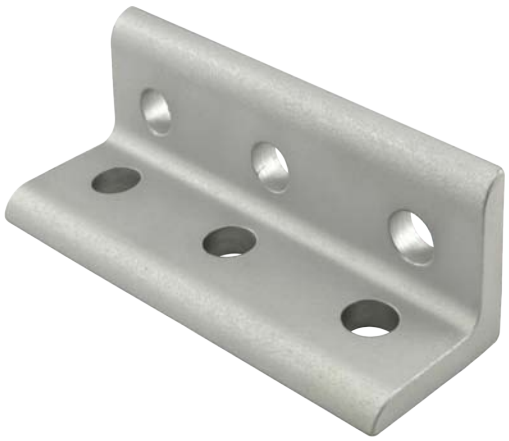

Part No.	Series	Material	Alloy	Finish	A	B	C	D	E	F	G	H	Weight
4015	10	Aluminum	6005A – T61	Clear Anodize	1.000"	1.000"	.188"	.500"	.437"	1.000"	2.875"	.281"	.083 lb
4015-Black	10			Black Anodize	1.000"	1.000"	.188"	.500"	.437"	1.000"	2.875"	.281"	.083 lb
4415	15			Clear Anodize	1.500"	1.500"	.250"	.750"	.656"	1.500"	4.310"	.328"	.268 lb
4415-Black	15			Black Anodize	1.500"	1.500"	.250"	.750"	.656"	1.500"	4.310"	.328"	.268 lb

Suggested Hardware (Mount to T-Slot)

Part No.	Series	Qty.	Bolt	T-Nut
3393	10	6	1/4-20 x 1/2" BHSCS	Economy
3320	15	6	5/16-18 x 11/16 FBHSCS	Economy

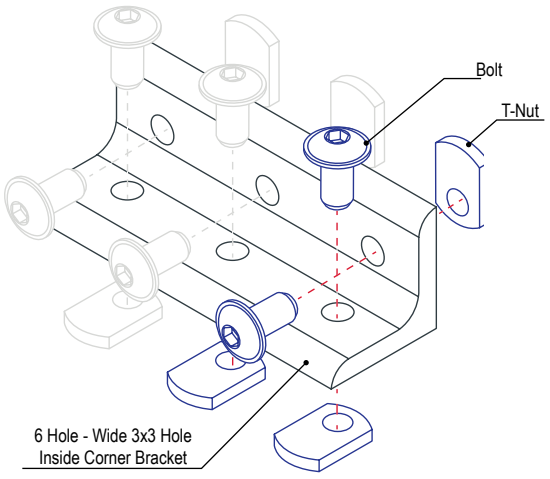

80/20 BUILD YOUR IDEA
More on 80/20® products available at 8020.net

6 Hole - Center Inside Corner Bracket

- No machining required
- Pre-load to simplify assembly
- Reconfigurable, reusable

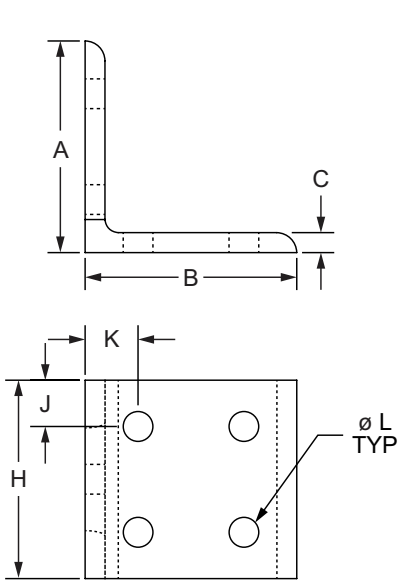

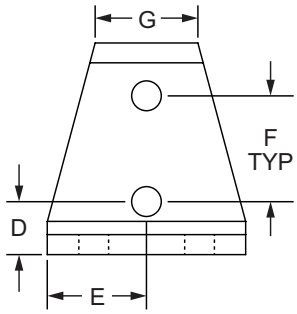

Part No.	Series	Material	Alloy	Finish	A	B	C	D	E	F	G	H	J	K	L	Weight
4111	10	Aluminum	6005A – T61	Clear Anodize	2.000"	2.000"	.188"	.500"	.937"	1.000"	.970"	1.875"	.438"	.500"	.281"	.106 lb
4111-Black	10			Black Anodize	2.000"	2.000"	.188"	.500"	.937"	1.000"	.970"	1.875"	.438"	.500"	.281"	.106 lb
4311	15			Clear Anodize	3.000"	3.000"	.250"	.750"	1.405"	1.500"	1.310"	2.810"	.654"	.750"	.328"	.338 lb
4311-Black	15			Black Anodize	3.000"	3.000"	.250"	.750"	1.405"	1.500"	1.310"	2.810"	.654"	.750"	.328"	.338 lb
25-4111	25			Clear Anodize	50.00mm	50.00mm	4.00mm	12.50mm	23.50mm	25.00mm	25.00mm	47.00mm	11.00mm	12.50mm	6.80mm	.0399 kg
25-4111-Black	25			Black Anodize	50.00mm	50.00mm	4.00mm	12.50mm	23.50mm	25.00mm	25.00mm	47.00mm	11.00mm	12.50mm	6.80mm	.0399 kg
40-4311	40			Clear Anodize	80.00mm	80.00mm	6.00mm	20.00mm	38.00mm	40.00mm	36.00mm	76.00mm	18.00mm	20.00mm	8.30mm	.1606 kg
40-4311-Black	40			Black Anodize	80.00mm	80.00mm	6.00mm	20.00mm	38.00mm	40.00mm	36.00mm	76.00mm	18.00mm	20.00mm	8.30mm	.1606 kg

Suggested Hardware (Mount to T-Slot)

Part No.	Series	Qty.	Bolt	T-Nut
3393	10	6	1/4-20 x 1/2" BHSCS	Economy
3320	15	6	5/16-18 x 11/16 FBHSCS	Economy
75-3404	25	6	M6 x 10mm BHSCS	Economy
75-3422	40	6	M8 x 16mm BHSCS	Economy

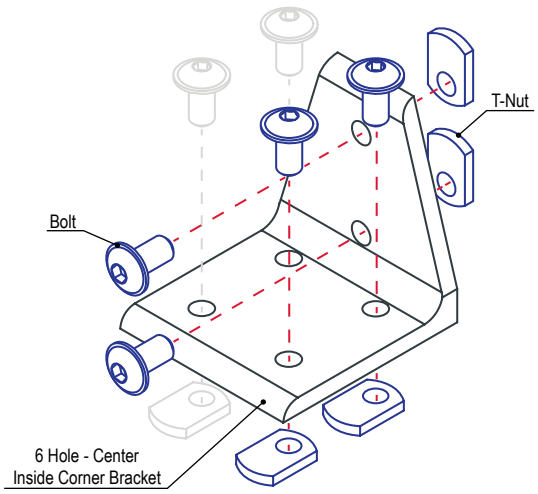

External Fasteners

6 Hole - Left Aligned Inside Corner Bracket

- No machining required
- Pre-load to simplify assembly
- Reconfigurable, reusable

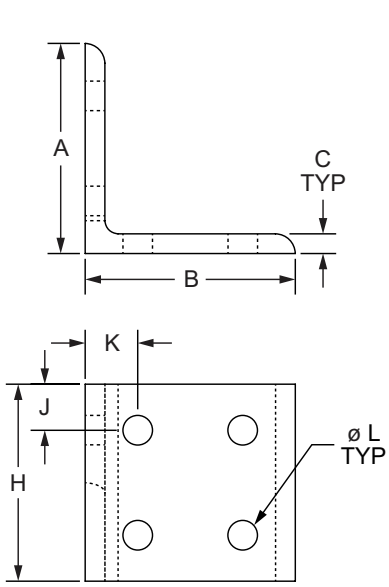

Part No.	Series	Material	Alloy	Finish	A	B	C	D	E	F	G	H	J	K	L	Weight
4122	10	Aluminum	6005A – T61	Clear Anodize	2.000"	2.000"	.188"	.500"	.437"	1.000"	.937"	1.875"	.437"	.500"	.281"	.105 lb
4122-Black	10			Black Anodize	2.000"	2.000"	.188"	.500"	.437"	1.000"	.937"	1.875"	.437"	.500"	.281"	.105 lb
4309	15			Clear Anodize	3.000"	3.000"	.250"	.750"	.656"	1.500"	1.310"	2.810"	.656"	.750"	.328"	.324 lb
4309-Black	15			Black Anodize	3.000"	3.000"	.250"	.750"	.656"	1.500"	1.310"	2.810"	.656"	.750"	.328"	.324 lb
40-4309	40			Clear Anodize	80.00mm	80.00mm	6.00mm	20.00mm	18.00mm	40.00mm	36.00mm	76.00mm	18.00mm	20.00mm	8.30mm	.1601 kg
40-4309-Black	40			Black Anodize	80.00mm	80.00mm	6.00mm	20.00mm	18.00mm	40.00mm	36.00mm	76.00mm	18.00mm	20.00mm	8.30mm	.1601 kg

Suggested Hardware (Mount to T-Slot)

Part No.	Series	Qty.	Bolt	T-Nut
3393	10	6	1/4-20 x 1/2" BHSCS	Economy
3320	15	6	5/16-18 x 11/16 FBHSCS	Economy
75-3422	40	6	M8 x 16mm BHSCS	Economy

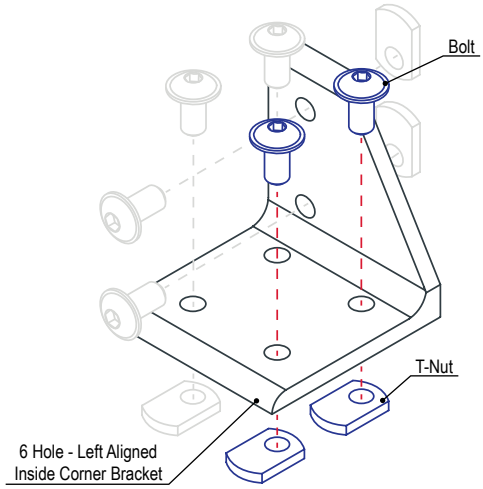

80/20 BUILD YOUR IDEA
More on 80/20® products available at 8020.net

6 Hole - Right Aligned Inside Corner Bracket

- No machining required
- Pre-load to simplify assembly
- Reconfigurable, reusable

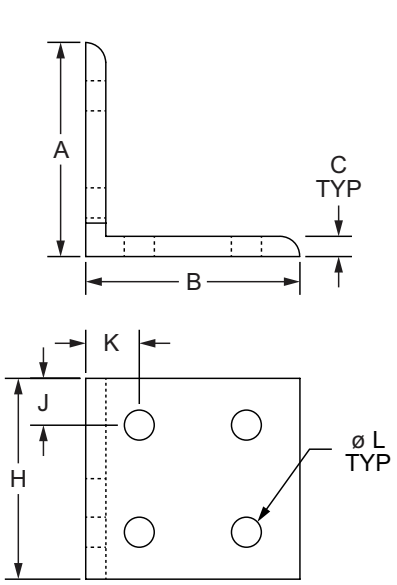

Part No.	Series	Material	Alloy	Finish	A	B	C	D	E	F	G	H	J	K	L	Weight
4121	10	Aluminum	6005A – T61	Clear Anodize	2.000"	2.000"	.188"	.500"	1.437"	1.000"	.938"	1.875"	.437"	.500"	.281"	.106 lb
4121-Black	10			Black Anodize	2.000"	2.000"	.188"	.500"	1.437"	1.000"	.938"	1.875"	.437"	.500"	.281"	.106 lb
4308	15			Clear Anodize	3.000"	3.000"	.250"	.750"	2.156"	1.500"	1.310"	2.810"	.656"	.750"	.328"	.326 lb
4308-Black	15			Black Anodize	3.000"	3.000"	.250"	.750"	2.156"	1.500"	1.310"	2.810"	.656"	.750"	.328"	.326 lb
40-4308	40			Clear Anodize	80.00mm	80.00mm	6.00mm	20.00mm	58.00mm	40.00mm	36.00mm	76.00mm	18.00mm	20.00mm	8.30mm	.1597 kg
40-4308-Black	40			Black Anodize	80.00mm	80.00mm	6.00mm	20.00mm	58.00mm	40.00mm	36.00mm	76.00mm	18.00mm	20.00mm	8.30mm	.1597 kg

Suggested Hardware (Mount to T-Slot)

Part No.	Series	Qty.	Bolt	T-Nut
3393	10	6	1/4-20 x 1/2" BHSCS	Economy
3320	15	6	5/16-18 x 11/16 FBHSCS	Economy
75-3422	40	6	M8 x 16mm BHSCS	Economy

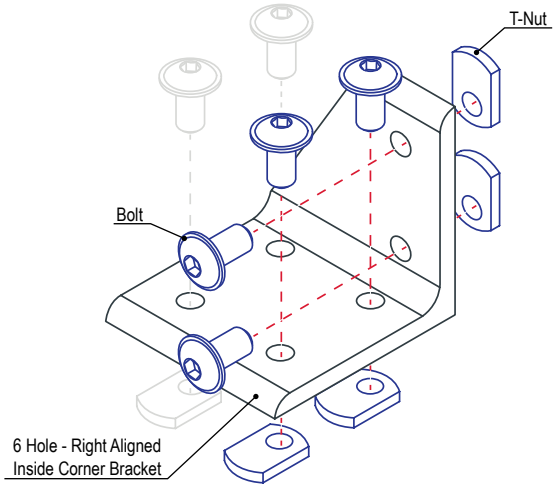

External Fasteners

6 Hole - Wide Slotted Inside Corner Bracket

- No machining required
- Pre-load to simplify assembly
- Reconfigurable, reusable

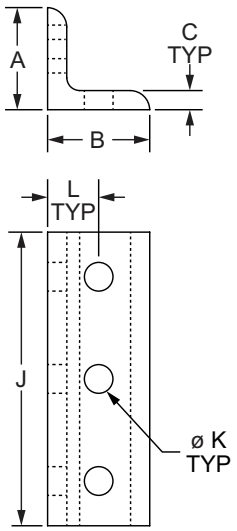

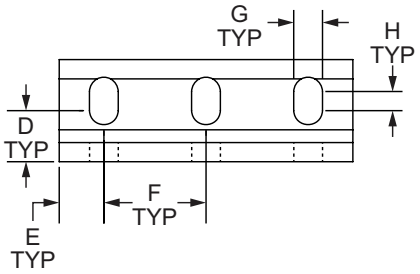

Part No.	Series	Material	Alloy	Finish	A	B	C	D	E	F	G	H	J	K	L	Weight
4266	10	Aluminum	6005A – T61	Clear Anodize	1.000"	1.000"	.188"	.500"	.438"	1.000"	.281"	.188"	2.875"	.281"	.500"	.081 lb
4266-Black	10			Black Anodize	1.000"	1.000"	.188"	.500"	.438"	1.000"	.281"	.188"	2.875"	.281"	.500"	.081 lb
4296	15			Clear Anodize	1.500"	1.500"	.250"	.500"	.656"	1.500"	.328"	.500"	4.312"	.328"	.750"	.257 lb
4296-Black	15			Black Anodize	1.500"	1.500"	.250"	.500"	.656"	1.500"	.328"	.500"	4.312"	.328"	.750"	.257 lb

Suggested Hardware (Mount to T-Slot)

Part No.	Series	Qty.	Bolt	T-Nut
3393	10	6	1/4-20 x 1/2" BHSCS	Economy
3320	15	6	5/16-18 x 11/16 FBHSCS	Economy

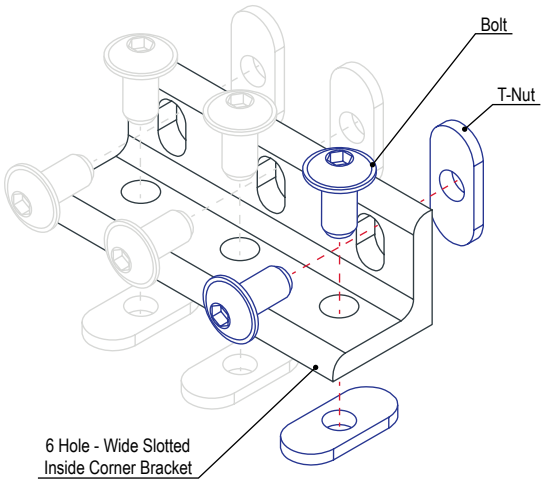

80/20 BUILD YOUR IDEA
More on 80/20® products available at 8020.net

8 Hole - Inside Corner Bracket

- No machining required
- Pre-load to simplify assembly
- Reconfigurable, reusable

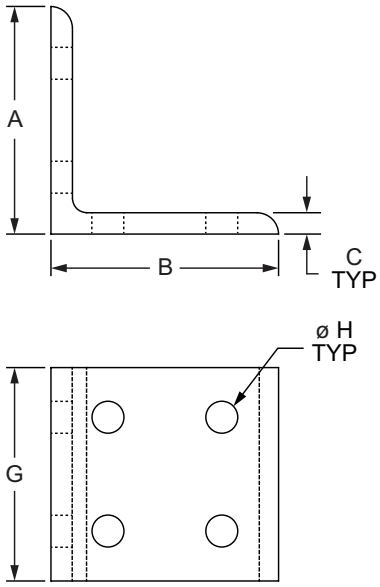

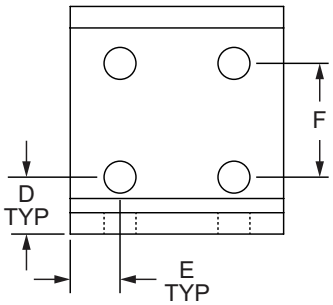

Part No.	Series	Material	Alloy	Finish	A	B	C	D	E	F	G	H	Weight
4114	10	Aluminum	6005A – T61	Clear Anodize	2.000"	2.000"	.188"	.500"	.438"	1.000"	1.875"	.281"	.115 lb
4114-Black	10			Black Anodize	2.000"	2.000"	.188"	.500"	.438"	1.000"	1.875"	.281"	.115 lb
4304	15			Clear Anodize	3.000"	3.000"	.250"	.750"	.656"	1.500"	2.810"	.328"	.365 lb
4304-Black	15			Black Anodize	3.000"	3.000"	.250"	.750"	.656"	1.500"	2.810"	.328"	.365 lb
25-4114	25			Clear Anodize	50.00mm	50.00mm	4.00mm	12.50mm	11.00mm	25.00mm	47.00mm	6.80mm	.0440 kg
25-4114-Black	25			Black Anodize	50.00mm	50.00mm	4.00mm	12.50mm	11.00mm	25.00mm	47.00mm	6.80mm	.0440 kg
40-4304	40			Clear Anodize	80.00mm	80.00mm	6.00mm	20.00mm	18.00mm	40.00mm	76.00mm	8.30mm	.1787 kg
40-4304-Black	40			Black Anodize	80.00mm	80.00mm	6.00mm	20.00mm	18.00mm	40.00mm	76.00mm	8.30mm	.1787 kg
45-4304	45			Clear Anodize	90.00mm	90.00mm	6.00mm	22.50mm	21.00mm	45.00mm	87.00mm	8.33mm	.2360 kg
45-4304-Black	45			Black Anodize	90.00mm	90.00mm	6.00mm	22.50mm	21.00mm	45.00mm	87.00mm	8.33mm	.2360 kg

Suggested Hardware (Mount to T-Slot)

Part No.	Series	Qty.	Bolt	T-Nut
3393	10	8	1/4-20 x 1/2" BHSCS	Economy
3320	15	8	5/16-18 x 11/16 FBHSCS	Economy
75-3404	25	8	M6 x 10mm BHSCS	Economy
75-3422	40	8	M8 x 16mm BHSCS	Economy
75-3619	45	8	M8 x 18mm BHSCS	Drop-In

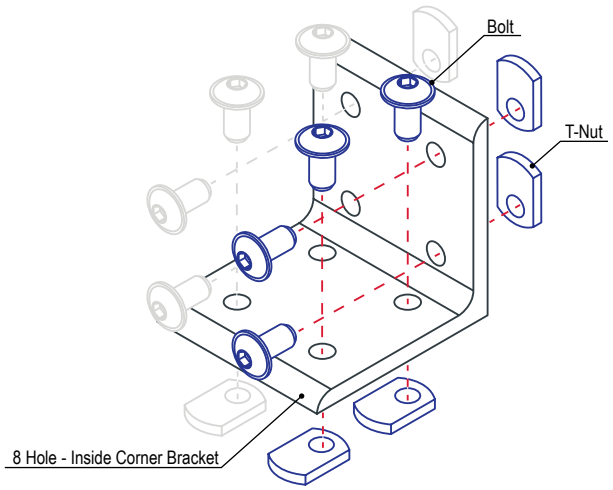

External Fasteners

8 Hole - 57mm Inside Corner Bracket with Dual Support

- No machining required
- Corner bracket covers sold separately
- Pre-load to simplify assembly
- Optional slot tab for alignment and prevent rotation

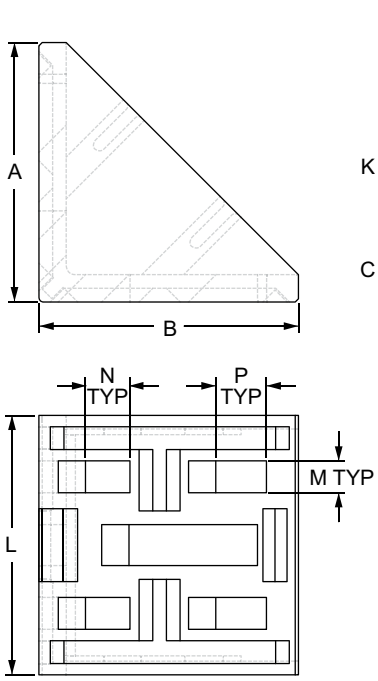

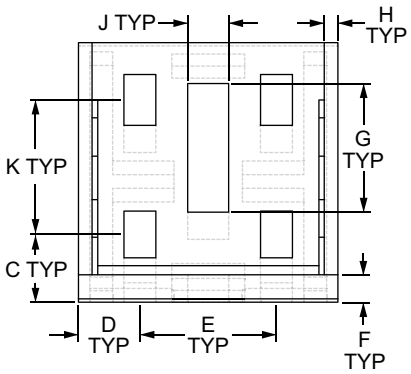

Part No.	Series	Material	Finish	A	B	C	D	E	F	G	H	J	K	L	M	N	P	Weight
14089	30	Zinc	Powder Coat	57.00mm	57.00mm	15.12mm	13.50mm	30.00mm	6.00mm	38.20mm	3.00mm	9.00mm	29.32mm	57.00mm	7.00mm	9.75mm	11.12mm	.2271 kg
14095	30	Aluminum	Natural	57.00mm	57.00mm	15.12mm	13.50mm	30.00mm	6.00mm	38.20mm	3.00mm	9.00mm	29.32mm	58.00mm	7.00mm	9.75mm	11.12mm	.1029 kg

Suggested Hardware (Mount to T-Slot)

Part No.	Series	Qty.	Bolt	T-Nut
75-3593	30	8	M6 x 14mm SHCS	Drop-In

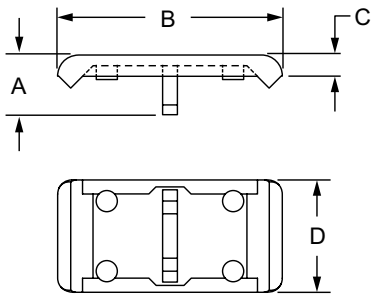

8 Hole - 57mm Inside Corner Bracket Cover Cap

Part No.	Bracket No.	Series	Material	A	B	C	D	Weight
12036	14089	30	PA6 GF 30	14.00mm	87.30mm	4.00mm	56.60mm	.0245 kg
12037	14095	30	PA6 GF 30	17.00mm	87.00mm	7.00mm	56.70mm	.0273 kg

80/20 BUILD YOUR IDEA
More on 80/20® products available at 8020.net

8 Hole - 76mm Inside Corner Bracket with Dual Support

- No machining required
- Corner bracket covers sold separately
- Pre-load to simplify assembly
- Optional slot tab for alignment and prevent rotation

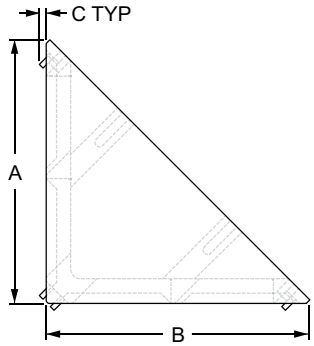

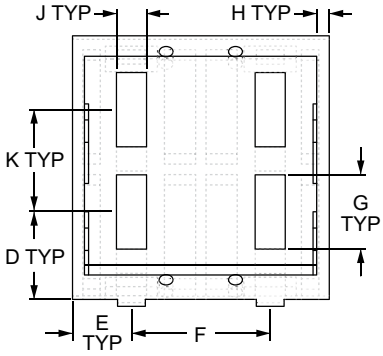

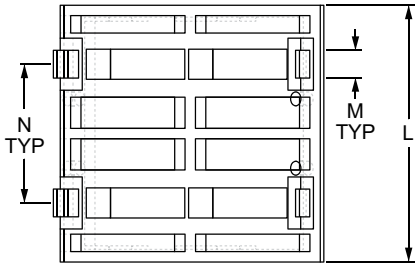

Part No.	Series	Material	Finish	A	B	C	D	E	F	G	H	J	K	L	M	N	Weight
14104	40	Zinc	Powder Coat	76.00mm	76.00mm	—	25.25mm	17.00mm	40.00mm	21.50mm	3.50mm	8.70mm	29.50mm	74.00mm	—	40.00mm	.4005 kg
14105	40			76.00mm	76.00mm	2.00mm	25.25mm	17.00mm	40.00mm	21.50mm	3.50mm	8.70mm	29.50mm	74.00mm	8.00mm	40.00mm	.4051 kg

Suggested Hardware (Mount to T-Slot)

Part No.	Series	Qty.	Bolt	T-Nut
75-3627	40	8	M8 x 18mm SHCS	Slide-In

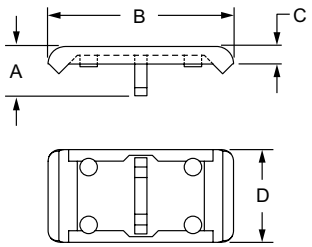

8 Hole - 76mm Inside Corner Bracket Cover Cap

Part No.	Series	Material	A	B	C	D	Weight
12039	40	PA6 GF 30	14.00mm	106.20mm	4.00mm	73.50mm	.0423 kg

External Fasteners

8 Hole - 86mm Inside Corner Bracket with Dual Support

- No machining required
- Corner bracket covers sold separately
- Pre-load to simplify assembly
- Optional slot tab for alignment and prevent rotation

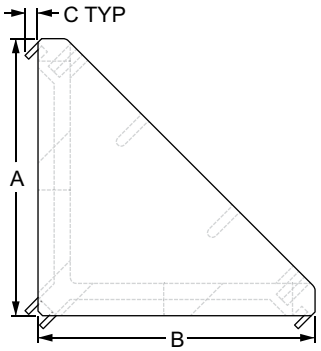

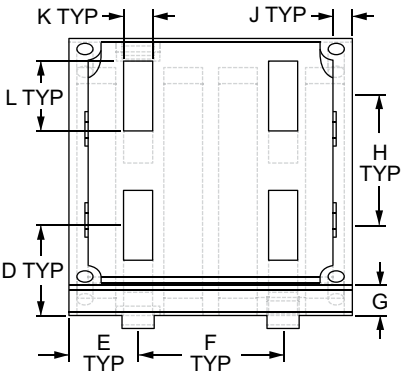

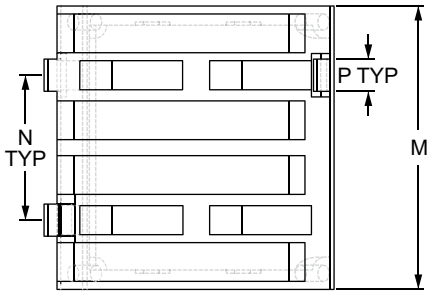

Part No.	Series	Material	Finish	A	B	C	D	E	F	G	H	J	K	L	M	N	P	Weight
14111	45	Aluminum	Natural	86.00mm	86.00mm	4.03mm	28.00mm	21.50mm	45.00mm	10.00mm	40.15mm	6.00mm	9.00mm	21.62mm	88.00mm	45.00mm	10.00mm	.3343 kg

Suggested Hardware (Mount to T-Slot)

Part No.	Series	Qty.	Bolt	T-Nut
75-3630	45	8	M8 x 20mm SHCS	Drop-In

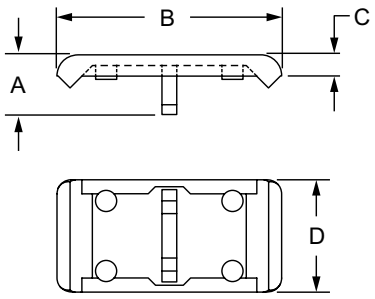

8 Hole - 86mm Inside Corner Bracket Cover Cap

Part No.	Series	Material	A	B	C	D	Weight
12040	45	PA6 GF 30	20.00mm	131.80mm	3.00mm	87.60mm	.0618 kg

80/20 BUILD YOUR IDEA
More on 80/20® products available at 8020.net

9 Hole - Wide Slotted Inside Corner Bracket

- No machining required
- Pre-load to simplify assembly
- Reconfigurable, reusable

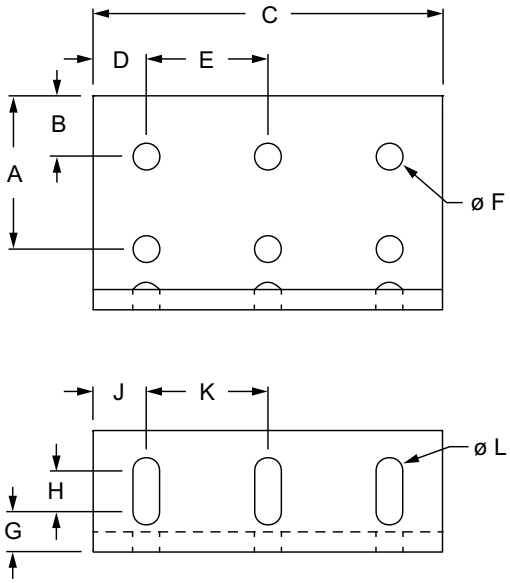

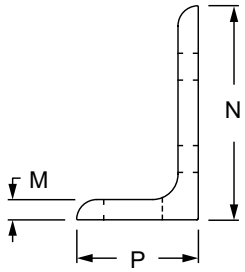

Part No.	Series	Material	Alloy	Finish	A	B	C	D	E	F	G	H	J	K	L	M	N	P	Weight
4251	10	Aluminum	6005A – T61	Clear Anodize	1.500"	.500"	2.875"	.437"	1.000"	.281"	.500"	.188"	.437"	1.000"	.281"	.188"	2.000"	1.000"	.129 lb
4251-Black	10			Black Anodize	1.500"	.500"	2.875"	.437"	1.000"	.281"	.500"	.188"	.437"	1.000"	.281"	.188"	2.000"	1.000"	.129 lb
4281	15			Clear Anodize	2.250"	.750"	4.310"	.656"	1.500"	.328"	.500"	.500"	.656"	1.500"	.328"	.250"	3.000"	1.500"	.406 lb
4281-Black	15			Black Anodize	2.250"	.750"	4.310"	.656"	1.500"	.328"	.500"	.500"	.656"	1.500"	.328"	.250"	3.000"	1.500"	.406 lb

Suggested Hardware (Mount to T-Slot)

Part No.	Series	Qty.	Bolt	T-Nut
3393	10	9	1/4-20 x 1/2" BHSCS	Economy
3320	15	9	5/16-18 x 11/16" FBHSCS	Economy

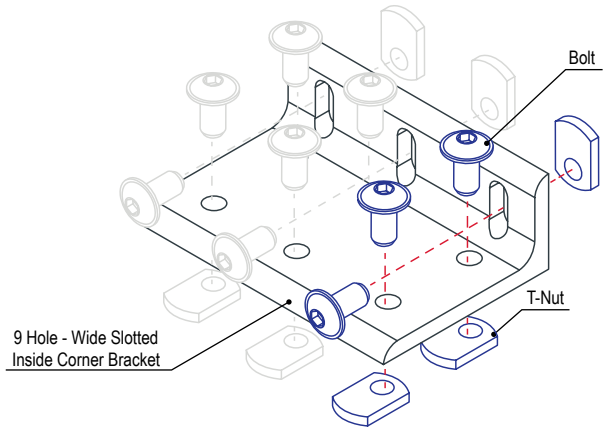

External Fasteners

10 Hole - Inside Corner Bracket

- No machining required
- Pre-load to simplify assembly
- Reconfigurable, reusable

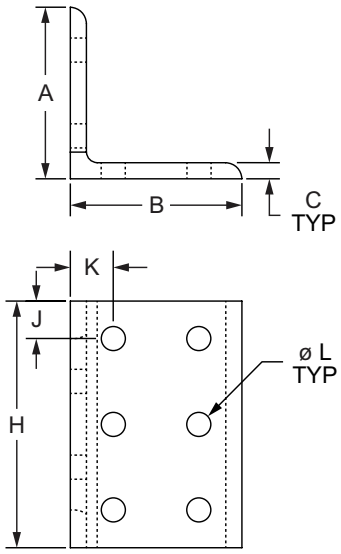

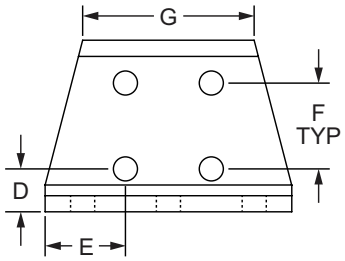

Part No.	Series	Material	Alloy	Finish	A	B	C	D	E	F	G	H	J	K	L	Weight
4020	10	Aluminum	6005A – T61	Clear Anodize	2.000"	2.000"	.188"	.500"	.937"	1.000"	2.000"	2.875"	.437"	.500"	.281"	.168 lb
4020-Black	10			Black Anodize	2.000"	2.000"	.188"	.500"	.937"	1.000"	2.000"	2.875"	.437"	.500"	.281"	.168 lb
4420	15			Clear Anodize	3.000"	3.000"	.250"	.750"	1.405"	1.500"	2.810"	4.310"	.654"	.750"	.328"	.522 lb
4420-Black	15			Black Anodize	3.000"	3.000"	.250"	.750"	1.405"	1.500"	2.810"	4.310"	.654"	.750"	.328"	.522 lb

Suggested Hardware (Mount to T-Slot)

Part No.	Series	Qty.	Bolt	T-Nut
3393	10	10	1/4-20 x 1/2" BHSCS	Economy
3320	15	10	5/16-18 x 11/16 FBHSCS	Economy

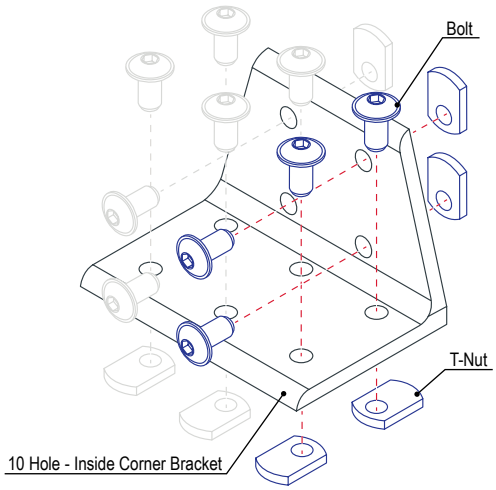

80/20 BUILD YOUR IDEA
More on 80/20® products available at 8020.net

12 Hole - Tall Inside Corner Bracket

- No machining required
- Pre-load to simplify assembly
- Reconfigurable, reusable

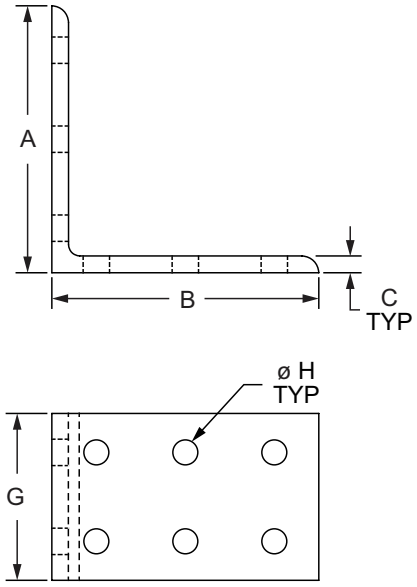

Part No.	Series	Material	Alloy	Finish	A	B	C	D	E	F	G	H	Weight
4014	10	Aluminum	6005A – T61	Clear Anodize	3.000"	3.000"	.188"	.500"	.438"	1.000"	1.875"	.281"	.177 lb
4014-Black	10			Black Anodize	3.000"	3.000"	.188"	.500"	.438"	1.000"	1.875"	.281"	.177 lb
4414	15			Clear Anodize	4.500"	4.500"	.250"	.750"	.656"	1.500"	2.812"	.328"	.560 lb
4414-Black	15			Black Anodize	4.500"	4.500"	.250"	.750"	.656"	1.500"	2.812"	.328"	.560 lb

Suggested Hardware (Mount to T-Slot)

Part No.	Series	Qty.	Bolt	T-Nut
3393	10	12	1/4-20 x 1/2" BHSCS	Economy
3320	15	12	5/16-18 x 11/16 FBHSCS	Economy

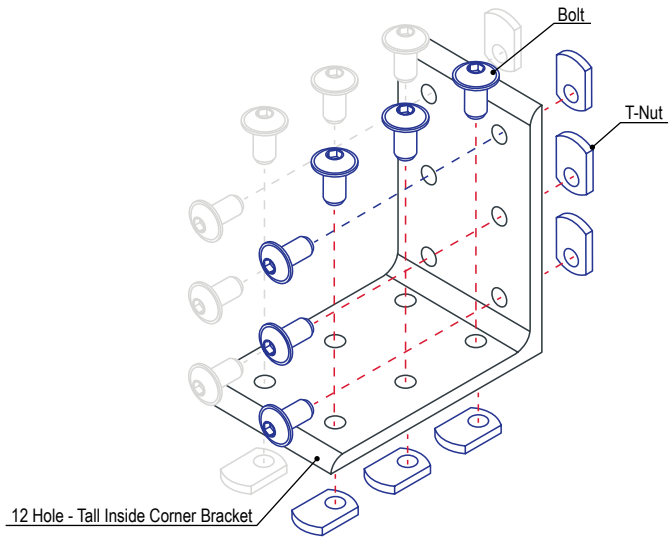

External Fasteners

12 Hole - Wide Inside Corner Bracket

- No machining required
- Pre-load to simplify assembly
- Reconfigurable, reusable

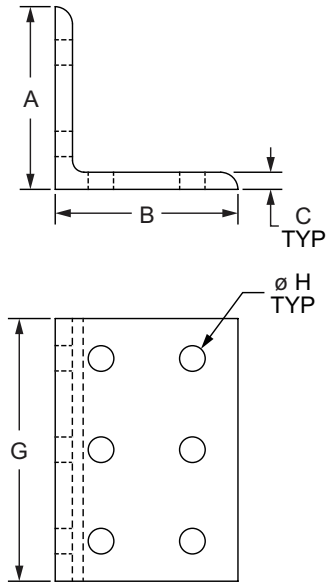

Part No.	Series	Material	Alloy	Finish	A	B	C	D	E	F	G	H	Weight
4016	10	Aluminum	6005A – T61	Clear Anodize	2.000"	2.000"	.188"	.500"	.438"	1.000"	2.875"	.281"	.178 lb
4016-Black	10			Black Anodize	2.000"	2.000"	.188"	.500"	.438"	1.000"	2.875"	.281"	.178 lb
4416	15			Clear Anodize	3.000"	3.000"	.250"	.750"	.656"	1.500"	4.310"	.328"	.564 lb
4416-Black	15			Black Anodize	3.000"	3.000"	.250"	.750"	.656"	1.500"	4.310"	.328"	.564 lb

Suggested Hardware (Mount to T-Slot)

Part No.	Series	Qty.	Bolt	T-Nut
3393	10	12	1/4-20 x 1/2" BHSCS	Economy
3320	15	12	5/16-18 x 11/16 FBHSCS	Economy

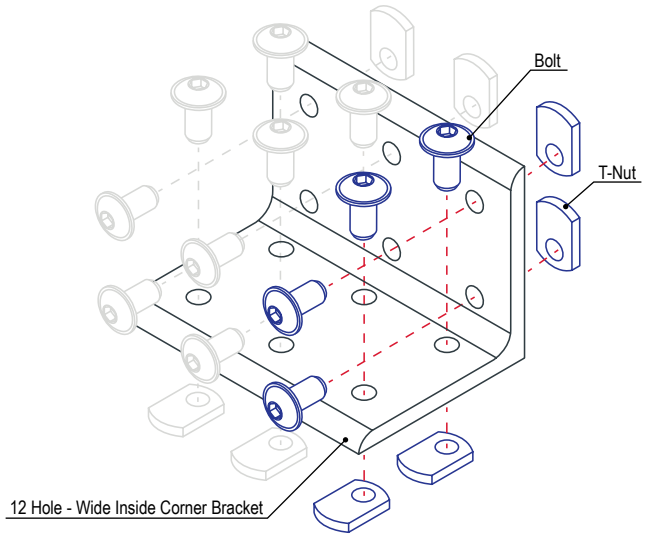

80/20 BUILD YOUR IDEA
More on 80/20® products available at 8020.net

18 Hole - Inside Corner Bracket

- No machining required
- Pre-load to simplify assembly
- Reconfigurable, reusable

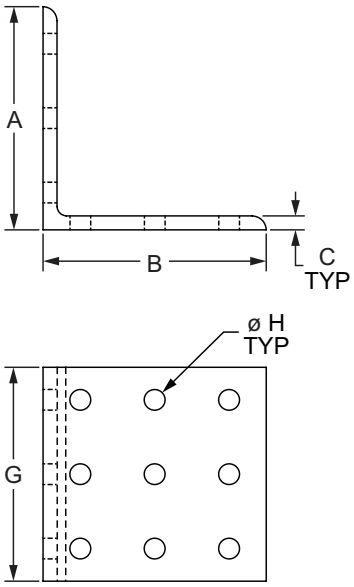

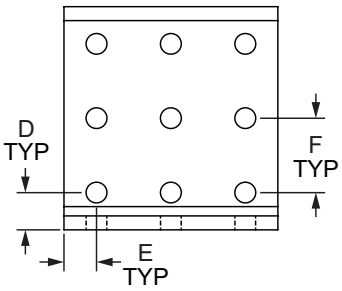

Part No.	Series	Material	Alloy	Finish	A	B	C	D	E	F	G	H	Weight
4017	10	Aluminum	6005A – T61	Clear Anodize	3.000"	3.000"	.188"	.500"	.438"	1.000"	2.875"	.281"	.271 lb
4017-Black	10			Black Anodize	3.000"	3.000"	.188"	.500"	.438"	1.000"	2.875"	.281"	.271 lb
4417	15			Clear Anodize	4.500"	4.500"	.250"	.750"	.656"	1.500"	4.310"	.328"	.861 lb
4417-Black	15			Black Anodize	4.500"	4.500"	.250"	.750"	.656"	1.500"	4.310"	.328"	.861 lb

Suggested Hardware (Mount to T-Slot)

Part No.	Series	Qty.	Bolt	T-Nut
3393	10	18	1/4-20 x 1/2" BHSCS	Economy
3320	15	18	5/16-18 x 11/16 FBHSCS	Economy

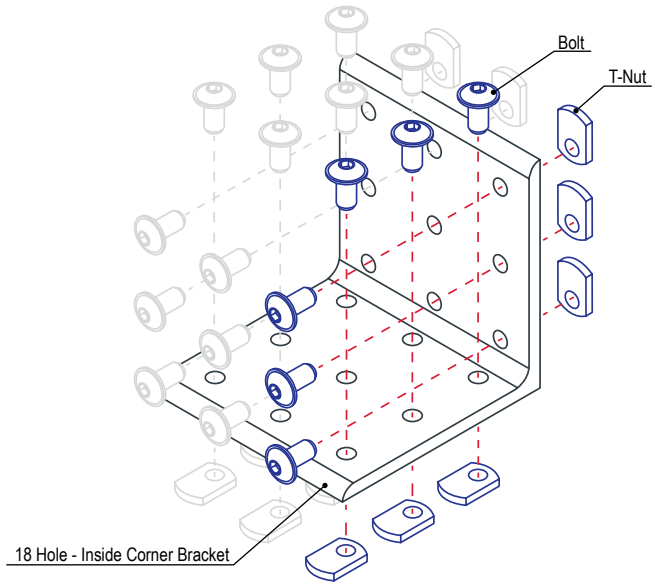

External Fasteners

2 Hole - Lite Transition Inside Corner Bracket

- No machining required
- Pre-load to simplify assembly
- Connects profiles in same product type but differing series
- Reconfigurable, reusable

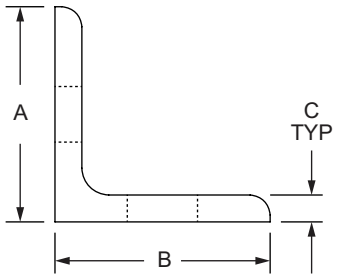

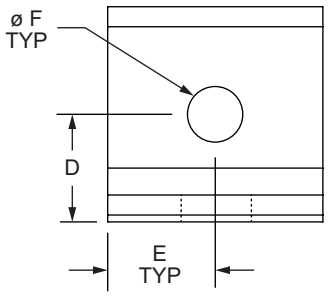

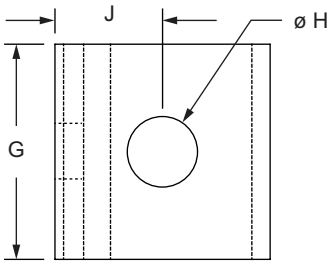

Part No.	Series	Material	Alloy	Finish	A	B	C	D	E	F	G	H	J	Weight
4509	10 to 15	Aluminum	6005A – T61	Clear Anodize	1.000"	1.000"	.125"	.500"	.500"	.257"	1.000"	.328"	.500"	.020 lb
4509-Black				Black Anodize	1.000"	1.000"	.125"	.500"	.500"	.257"	1.000"	.328"	.500"	.020 lb
65-4509	25 to 40			Clear Anodize	25.00mm	25.00mm	3.00mm	12.50mm	12.50mm	6.30mm	25.00mm	8.30mm	12.50mm	.0086 kg
65-4509-Black				Black Anodize	25.00mm	25.00mm	3.00mm	12.50mm	12.50mm	6.30mm	25.00mm	8.30mm	12.50mm	.0086 kg

Suggested Hardware (Mount to T-Slot)

Part No.	Series	Qty.	Bolt	T-Nut
3386	10 to 15	1	1/4-20 x 3/8" FBHSCS	Economy
3319		1	5/16-18 x 1/2 FBHSCS	Economy
75-3404	25 to 40	1	M6 x 10mm BHSCS	Economy
75-3421		1	M8 x 12mm BHSCS	Economy

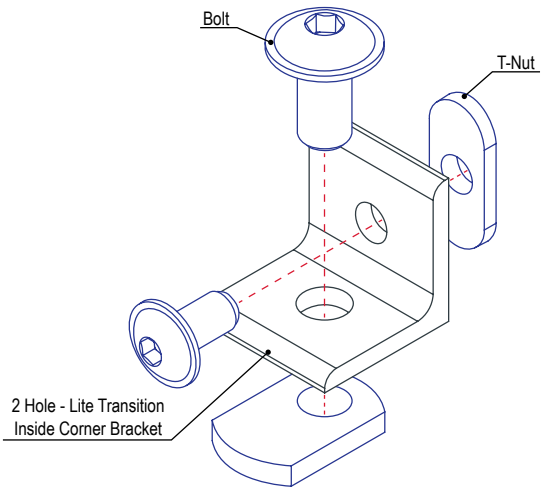

80/20 BUILD YOUR IDEA
More on 80/20® products available at 8020.net

2 Hole - Transition Inside Corner Bracket

- No machining required
- Pre-load to simplify assembly
- Connects profiles in same product type but differing series
- Reconfigurable, reusable

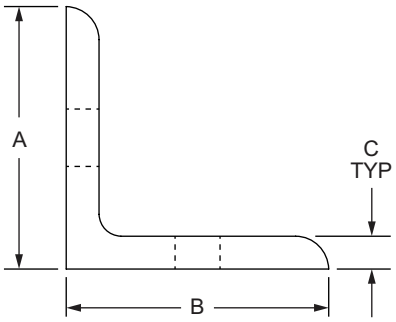

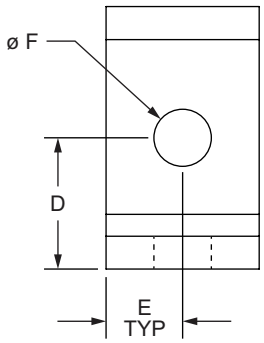

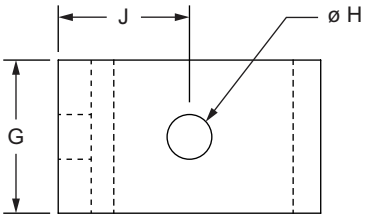

Part No.	Series	Material	Alloy	Finish	A	B	C	D	E	F	G	H	J	Weight
4503	10 to 15	Aluminum	6005A – T61	Clear Anodize	1.500"	1.500"	.188"	.750"	.438"	.328"	.875"	.257"	.750"	.041 lb
4503-Black				Black Anodize	1.500"	1.500"	.188"	.750"	.438"	.328"	.875"	.257"	.750"	.041 lb
65-4503	25 to 40			Clear Anodize	40.00mm	40.00mm	6.00mm	20.00mm	11.00mm	8.33mm	22.00mm	6.30mm	20.00mm	.0248 kg
65-4503-Black				Black Anodize	40.00mm	40.00mm	6.00mm	20.00mm	11.00mm	8.33mm	22.00mm	6.30mm	20.00mm	.0248 kg

Suggested Hardware (Mount to T-Slot)

Part No.	Series	Qty.	Bolt	T-Nut
3393	10 to 15	1	1/4-20 x 1/2" BHSCS	Economy
3435		1	5/16-18 x 5/8 BHSCS, Washer	Economy
75-3405	25 to 40	1	M6 x 12mm BHSCS	Economy
75-3422		1	M8 x 16mm BHSCS	Economy

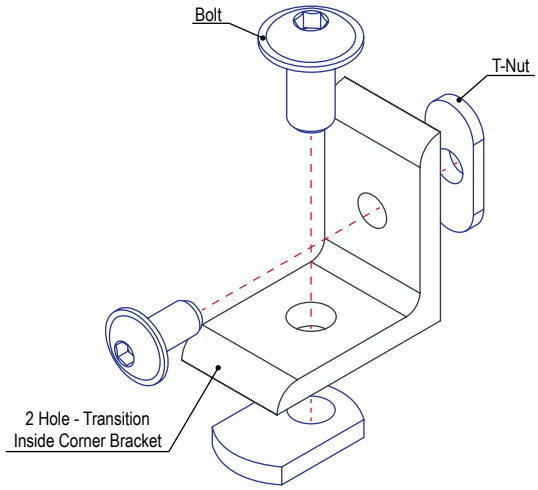

External Fasteners

4 Hole - Tall Transition Inside Corner Bracket

- No machining required
- Pre-load to simplify assembly
- Connects profiles in same product type but differing series
- Reconfigurable, reusable

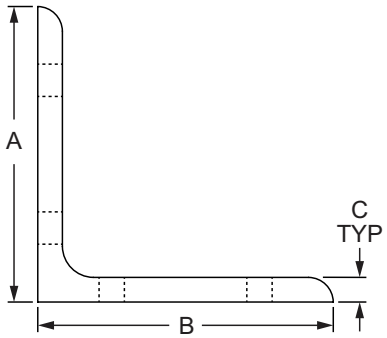

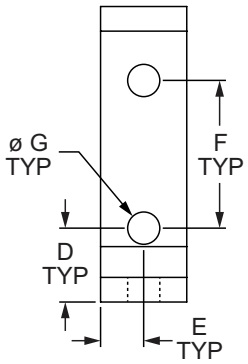

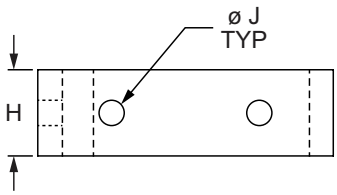

Part No.	Series	Material	Alloy	Finish	A	B	C	D	E	F	G	H	J	Weight
4504	10 to 15	Aluminum	6005A – T61	Clear Anodize	3.000"	3.000"	.250"	.750"	.438"	1.500"	.328"	.875"	.257"	.113 lb
4504-Black	10 to 15	Aluminum	6005A – T61	Black Anodize	3.000"	3.000"	.250"	.750"	.438"	1.500"	.328"	.875"	.257"	.113 lb
65-4504	25 to 40	Aluminum	6005A – T61	Clear Anodize	80.00mm	80.00mm	6.00mm	20.00mm	11.00mm	40.00mm	8.30mm	22.00mm	6.30mm	.0513 kg
65-4504-Black	25 to 40	Aluminum	6005A – T61	Black Anodize	80.00mm	80.00mm	6.00mm	20.00mm	11.00mm	40.00mm	8.30mm	22.00mm	6.30mm	.0513 kg

Suggested Hardware (Mount to T-Slot)

Part No.	Series	Qty.	Bolt	T-Nut
3393	10 to 15	2	1/4-20 x 1/2" BHSCS	Economy
3320	10 to 15	2	5/16-18 x 11/16" FBHSCS	Economy
75-3405	25 to 40	2	M6 x 12mm BHSCS	Economy
75-3422	25 to 40	2	M8 x 16mm BHSCS	Economy

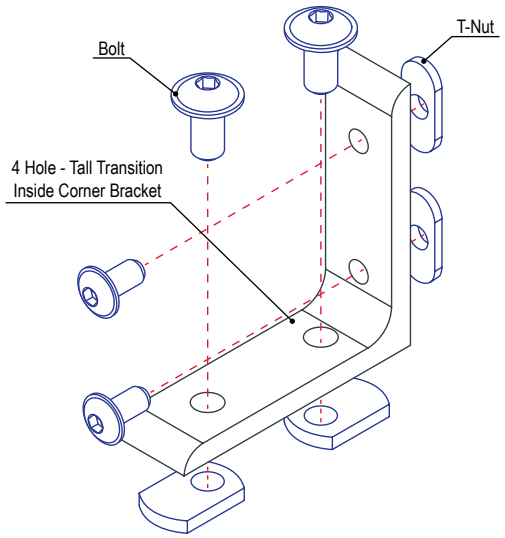

80/20 BUILD YOUR IDEA
More on 80/20® products available at 8020.net

4 Hole - Lite Wide Transition Inside Corner Bracket

- No machining required
- Pre-load to simplify assembly
- Connects fractional profiles but differing series
- Reconfigurable, reusable

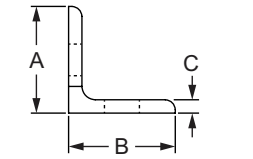

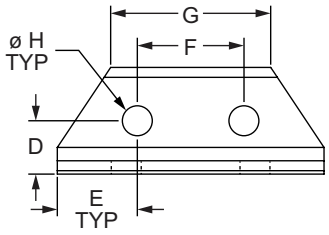

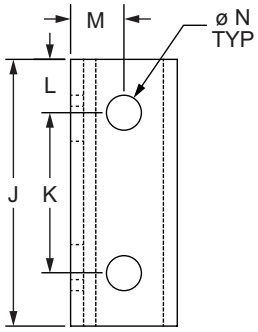

Part No.	Series	Material	Alloy	Finish	A	B	C	D	E	F	G	H	J	K	L	M	N	Weight
4511	10 to 15	Aluminum	6005A – T61	Clear Anodize	1.000"	1.000"	.125"	.500"	.750"	1.000"	1.500"	.281"	2.500"	1.500"	.500"	.500"	.328"	.048 lb
4511-Black				Black Anodize	1.000"	1.000"	.125"	.500"	.750"	1.000"	1.500"	.281"	2.500"	1.500"	.500"	.500"	.328"	.048 lb

Suggested Hardware (Mount to T-Slot)

Part No.	Series	Qty.	Bolt	T-Nut
3386	10 to 15	2	1/4-20 x 3/8" FBHSCS	Economy
3319		2	5/16-18 x 1/2" FBHSCS	Economy

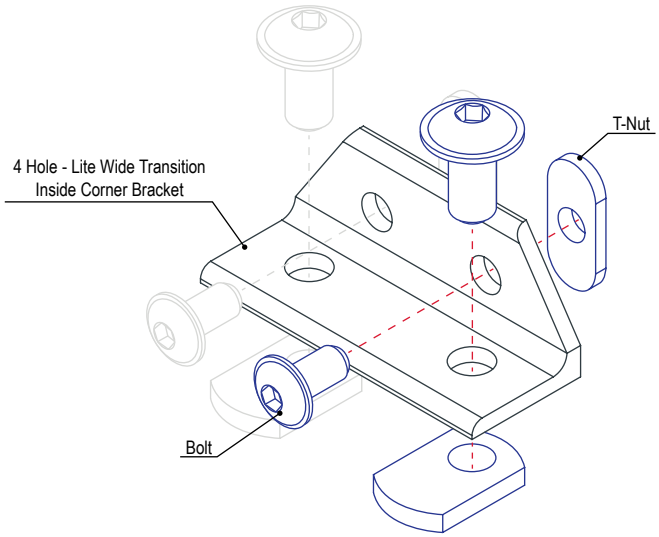

External Fasteners

4 Hole - Wide Transition Inside Corner Bracket

- No machining required
- Pre-load to simplify assembly
- Connects profiles in same product type but differing series
- Reconfigurable, reusable

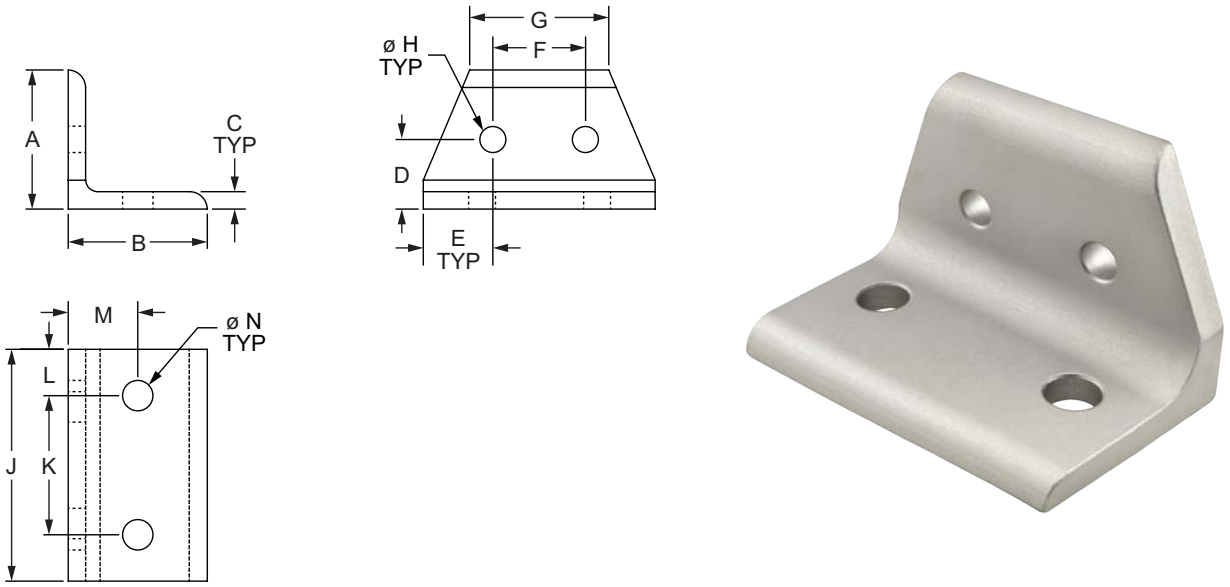

Part No.	Series	Finish	A	B	C	D	E	F	G	H	J	K	L	M	N	Weight
4512	10 to 15	Clear Anodize	1.500"	1.500"	.188"	.750"	.750"	1.000"	1.500"	.281"	2.500"	1.500"	.500"	.750"	.328"	.108 lb
4512-Black		Black Anodize	1.500"	1.500"	.188"	.750"	.750"	1.000"	1.500"	.281"	2.500"	1.500"	.500"	.750"	.328"	.108 lb
65-4512	25 to 40	Clear Anodize	40.00mm	40.00mm	6.00mm	20.00mm	18.75mm	25.00mm	40.00mm	6.30mm	62.50mm	40.00mm	11.25mm	20.00mm	8.30mm	.0671 kg
65-4512-Black		Black Anodize	40.00mm	40.00mm	6.00mm	20.00mm	18.75mm	25.00mm	40.00mm	6.30mm	62.50mm	40.00mm	11.25mm	20.00mm	8.30mm	.0671 kg

Material Specifications

Material	Alloy
Aluminum	6005A – T61

Suggested Hardware (Mount to T-Slot)

Part No.	Series	Qty.	Bolt	T-Nut
3393	10 to 15	2	1/4-20 x 1/2" BHSCS	Economy
3320		2	5/16-18 x 11/16" FBHSCS	Economy
75-3405	25 to 40	2	M6 x 12mm BHSCS	Economy
75-3422		2	M8 x 16mm BHSCS	Economy

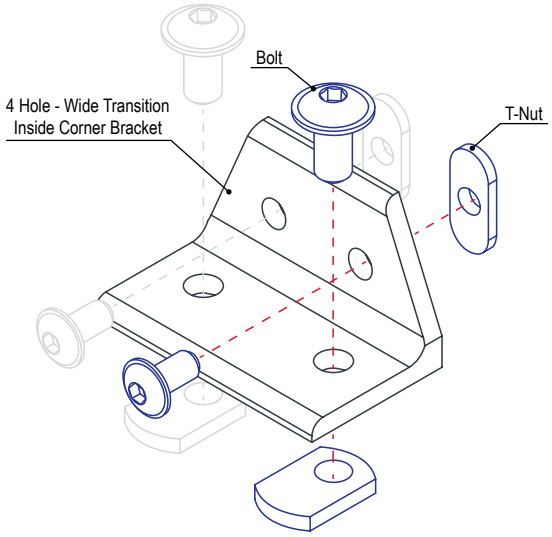

80/20 BUILD YOUR IDEA
More on 80/20® products
available at 8020.net

8 Hole - Center Transition Inside Corner Bracket

- No machining required
- Pre-load to simplify assembly
- Connects profiles in same product type but differing series
- Reconfigurable, reusable

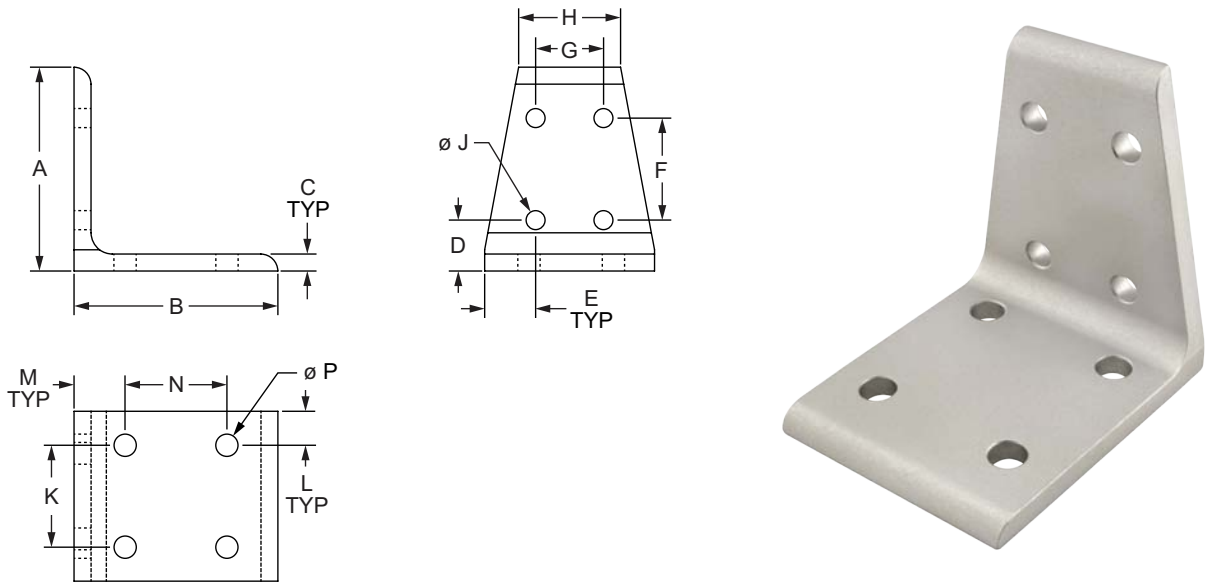

Part No.	Series	Finish	A	B	C	D	E	F	G	H	J	K	L	M	N	P	Weight
4513	10 to 15	Clear Anodize	3.000"	3.000"	.250"	.750"	.750"	1.500"	1.000"	1.500"	.281"	1.500"	.500"	.750"	1.500"	.328"	.305 lb
4513-Black		Black Anodize	3.000"	3.000"	.250"	.750"	.750"	1.500"	1.000"	1.500"	.281"	1.500"	.500"	.750"	1.500"	.328"	.305 lb
65-4513	25 to 40	Clear Anodize	80.00mm	80.00mm	6.00mm	20.00mm	18.75mm	40.00mm	25.00mm	40.00mm	6.30mm	40.00mm	11.25mm	20.00mm	40.00mm	8.30mm	.1370 kg
65-4513-Black		Black Anodize	80.00mm	80.00mm	6.00mm	20.00mm	18.75mm	40.00mm	25.00mm	40.00mm	6.30mm	40.00mm	11.25mm	20.00mm	40.00mm	8.30mm	.1370 kg

Material Specifications

Material	Alloy
Aluminum	6005A – T61

Suggested Hardware (Mount to T-Slot)

Part No.	Series	Qty.	Bolt	T-Nut
3393	10 to 15	4	1/4-20 x 1/2" BHSCS	Economy
3320		4	5/16-18 x 11/16" FBHSCS	Economy
75-3405	25 to 40	4	M6 x 12mm BHSCS	Economy
75-3422		4	M8 x 16mm BHSCS	Economy

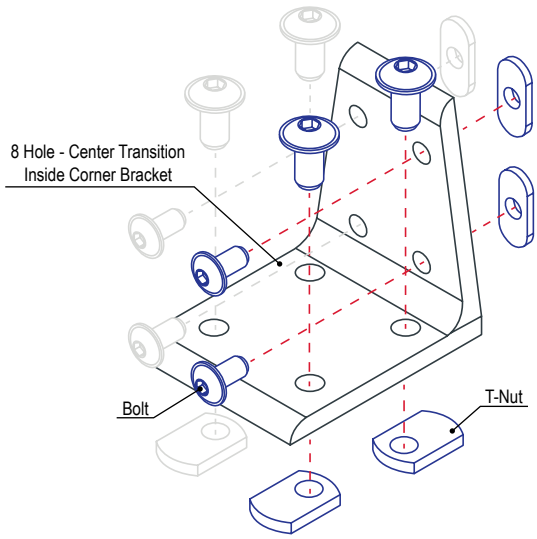

External Fasteners

2 Hole - Gusseted Inside Corner Bracket

- No machining required
- Pre-load to simplify assembly
- Reconfigurable, reusable

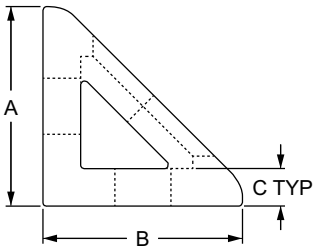

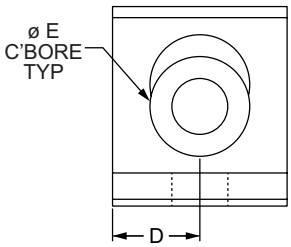

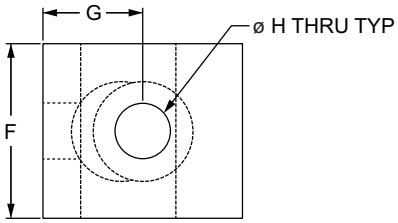

Part No.	Series	Material	Alloy	Finish	A	B	C	D	E	F	G	H	Weight
4132	10	Aluminum	6005A – T61	Clear Anodize	1.000"	1.000"	.188"	.438"	.500"	.875"	.500"	.281"	.035 lb
4132-Black	10			Black Anodize	1.000"	1.000"	.188"	.438"	.500"	.875"	.500"	.281"	.035 lb
4332	15 RT			Clear Anodize	1.500"	1.500"	.250"	.656"	.750"	1.312"	.750"	.328"	.111 lb
4332-Black	15 RT			Black Anodize	1.500"	1.500"	.250"	.656"	.750"	1.312"	.750"	.328"	.111 lb
25-4132	25			Clear Anodize	25.00mm	25.00mm	4.00mm	11.00mm	12.70mm	22.00mm	12.50mm	6.80mm	.0140 kg
25-4132-Black	25			Black Anodize	25.00mm	25.00mm	4.00mm	11.00mm	12.70mm	22.00mm	12.50mm	6.80mm	.0140 kg
30-4332	30			Clear Anodize	30.00mm	30.00mm	4.00mm	13.50mm	12.70mm	27.00mm	15.00mm	6.81mm	.0228 kg
30-4332-Black	30			Black Anodize	30.00mm	30.00mm	4.00mm	13.50mm	12.70mm	27.00mm	15.00mm	6.81mm	.0228 kg
40-4332	40			Clear Anodize	40.00mm	40.00mm	6.00mm	18.00mm	20.00mm	36.00mm	20.00mm	8.30mm	.0567 kg
40-4332-Black	40			Black Anodize	40.00mm	40.00mm	6.00mm	18.00mm	20.00mm	36.00mm	20.00mm	8.30mm	.0567 kg
45-4332	45			Clear Anodize	45.00mm	45.00mm	6.00mm	21.00mm	20.00mm	42.00mm	22.50mm	8.33mm	.0802 kg
45-4332-Black	45			Black Anodize	45.00mm	45.00mm	6.00mm	21.00mm	20.00mm	42.00mm	22.50mm	8.33mm	.0802 kg

Suggested Hardware (Mount to T-Slot)

Part No.	Series	Qty.	Bolt	T-Nut
3393	10	2	1/4-20 x 1/2" BHSCS	Economy
3320	15	2	5/16-18 x 11/16" FBHSCS	Economy
75-3404	25	2	M6 x 10mm BHSCS	Economy
75-3600	30	2	M6 x 12mm BHSCS	Drop-In
75-3422	40	2	M8 x 16mm BHSCS	Economy
75-3619	45	2	M8 x 18mm BHSCS	Drop-In

Suggested Hardware (Mount to Ready Tube)

Part No.	Series	Qty.	Bolt Assembly
3961	RT	2	5/16-18 x 2.00" BHSCS w/ Washer & Flanged Hex Nut

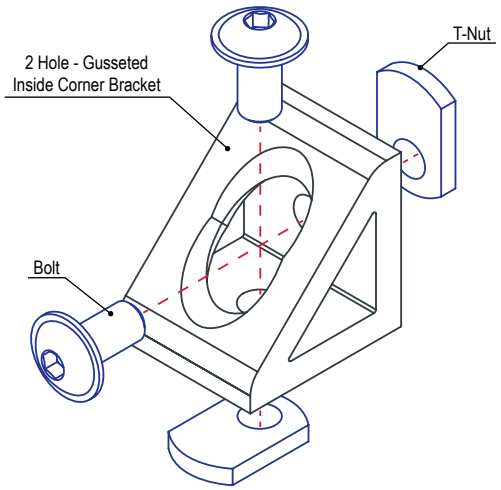

80/20 BUILD YOUR IDEA
More on 80/20® products available at 8020.net

4 Hole - Tall Gusseted Inside Corner Bracket

- No machining required
- Pre-load to simplify assembly
- Reconfigurable, reusable

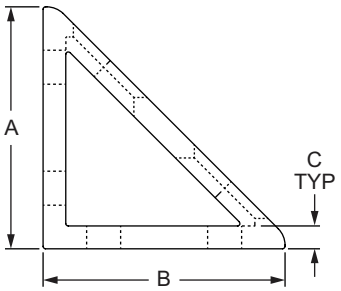

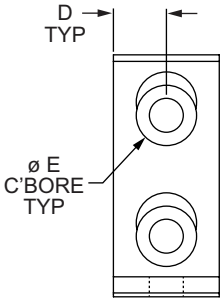

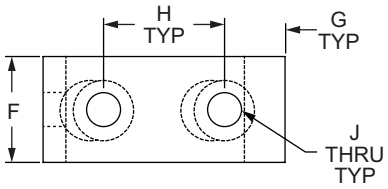

Part No.	Series	Material	Alloy	Finish	A	B	C	D	E	F	G	H	J	Weight
4136	10	Aluminum	6005A – T61	Clear Anodize	2.000"	2.000"	.188"	.438"	.500"	.875"	.500"	1.000"	.281"	.078 lb
4136-Black	10			Black Anodize	2.000"	2.000"	.188"	.438"	.500"	.875"	.500"	1.000"	.281"	.078 lb
4336	15 RT			Clear Anodize	3.000"	3.000"	.250"	.656"	.750"	1.312"	.750"	1.500"	.328"	.243 lb
4336-Black	15 RT			Black Anodize	3.000"	3.000"	.250"	.656"	.750"	1.312"	.750"	1.500"	.328"	.243 lb
25-4136	25			Clear Anodize	50.00mm	50.00mm	4.00mm	11.00mm	12.70mm	22.00mm	12.50mm	25.00mm	6.80mm	.0354 kg
25-4136-Black	25			Black Anodize	50.00mm	50.00mm	4.00mm	11.00mm	12.70mm	22.00mm	12.50mm	25.00mm	6.80mm	.0354 kg
30-4336	30			Clear Anodize	60.00mm	60.00mm	4.00mm	13.50mm	12.70mm	27.00mm	15.00mm	30.00mm	6.81mm	.0496 kg
30-4336-Black	30			Black Anodize	60.00mm	60.00mm	4.00mm	13.50mm	12.70mm	27.00mm	15.00mm	30.00mm	6.81mm	.0496 kg
40-4336	40			Clear Anodize	80.00mm	80.00mm	6.00mm	18.00mm	20.00mm	36.00mm	20.00mm	40.00mm	8.30mm	.1234 kg
40-4336-Black	40			Black Anodize	80.00mm	80.00mm	6.00mm	18.00mm	20.00mm	36.00mm	20.00mm	40.00mm	8.30mm	.1234 kg
45-4336	45			Clear Anodize	90.00mm	90.00mm	6.00mm	21.00mm	20.00mm	42.00mm	22.50mm	45.00mm	8.33mm	.1747 kg
45-4336-Black	45			Black Anodize	90.00mm	90.00mm	6.00mm	21.00mm	20.00mm	42.00mm	22.50mm	45.00mm	8.33mm	.1747 kg

Suggested Hardware (Mount to T-Slot)

Part No.	Series	Qty.	Bolt	T-Nut
3393	10	4	1/4-20 x 1/2" BHSCS	Economy
3320	15	4	5/16-18 x 11/16" FBHSCS	Economy
75-3404	25	4	M6 x 10mm BHSCS	Economy
75-3600	30	4	M6 x 12mm BHSCS	Drop-In
75-3422	40	4	M8 x 16mm BHSCS	Economy
75-3619	45	4	M8 x 18mm BHSCS	Drop-In

Suggested Hardware (Mount to Ready Tube)

Part No.	Series	Qty.	Bolt Assembly
3961	RT	4	5/16-18 x 2.00" BHSCS w/ Washer & Flanged Hex Nut

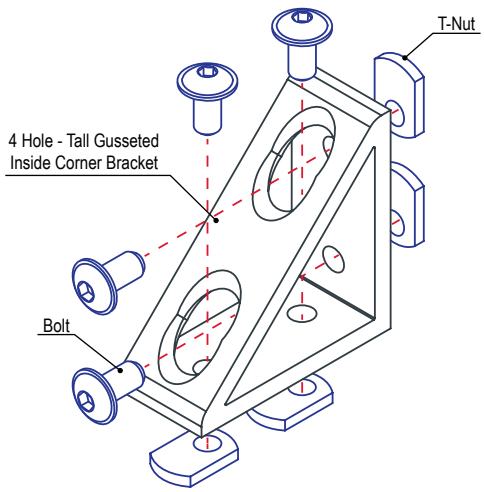

External Fasteners

4 Hole - Wide Gusseted Inside Corner Bracket

- No machining required
- Pre-load to simplify assembly
- Reconfigurable, reusable

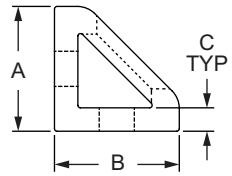

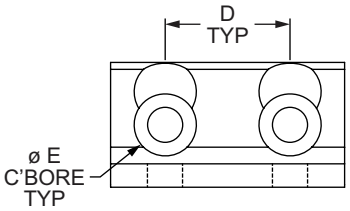

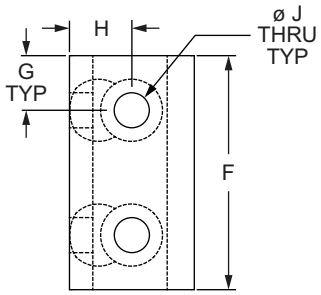

Part No.	Series	Material	Alloy	Finish	A	B	C	D	E	F	G	H	J	Weight
4134	10	Aluminum	6005A – T61	Clear Anodize	1.000"	1.000"	.188"	1.000"	.500"	1.875"	.438"	.500"	.281"	.077 lb
4134-Black	10			Black Anodize	1.000"	1.000"	.188"	1.000"	.500"	1.875"	.438"	.500"	.281"	.077 lb
4334	15			Clear Anodize	1.500"	1.500"	.250"	1.500"	.750"	2.812"	.656"	.750"	.328"	.241 lb
4334-Black	15			Black Anodize	1.500"	1.500"	.250"	1.500"	.750"	2.812"	.656"	.750"	.328"	.241 lb
25-4134	25			Clear Anodize	25.00mm	25.00mm	4.00mm	25.00mm	12.70mm	47.00mm	11.00mm	12.50mm	6.80mm	.0299 kg
25-4134-Black	25			Black Anodize	25.00mm	25.00mm	4.00mm	25.00mm	12.70mm	47.00mm	11.00mm	12.50mm	6.80mm	.0299 kg
30-4134	30			Clear Anodize	30.00mm	30.00mm	4.00mm	30.00mm	12.70mm	57.00mm	13.50mm	15.00mm	6.81mm	.0484 kg
30-4134-Black	30			Black Anodize	30.00mm	30.00mm	4.00mm	30.00mm	12.70mm	57.00mm	13.50mm	15.00mm	6.81mm	.0484 kg
40-4334	40			Clear Anodize	40.00mm	40.00mm	6.00mm	40.00mm	20.00mm	76.00mm	18.00mm	20.00mm	8.30mm	.1207 kg
40-4334-Black	40			Black Anodize	40.00mm	40.00mm	6.00mm	40.00mm	20.00mm	76.00mm	18.00mm	20.00mm	8.30mm	.1207 kg
45-4334	45			Clear Anodize	45.00mm	45.00mm	6.00mm	45.00mm	20.00mm	87.00mm	21.00mm	22.50mm	8.33mm	.1669 kg
45-4334-Black	45			Black Anodize	45.00mm	45.00mm	6.00mm	45.00mm	20.00mm	87.00mm	21.00mm	22.50mm	8.33mm	.1669 kg

Suggested Hardware (Mount to T-Slot)

Part No.	Series	Qty.	Bolt	T-Nut
3393	10	4	1/4-20 x 1/2" BHSCS	Economy
3320	15	4	5/16-18 x 11/16" FBHSCS	Economy
75-3404	25	4	M6 x 10mm BHSCS	Economy
75-3600	30	4	M6 x 12mm BHSCS	Drop-In
75-3422	40	4	M8 x 16mm BHSCS	Economy
75-3619	45	4	M8 x 18mm BHSCS	Drop-In

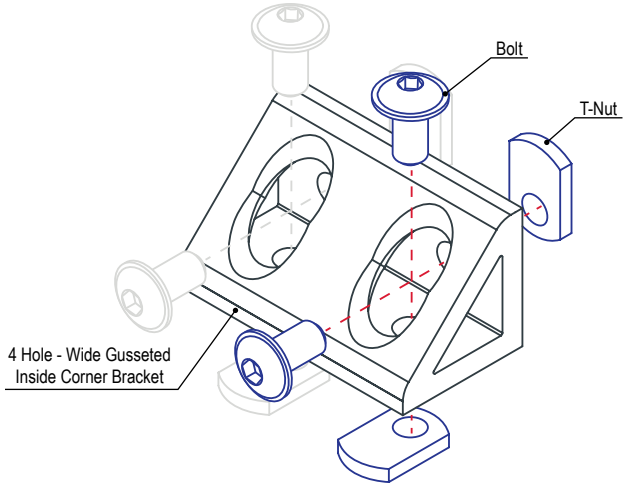

80/20 BUILD YOUR IDEA
More on 80/20® products available at 8020.net

8 Hole - Gusseted Inside Corner Bracket

- No machining required
- Pre-load to simplify assembly
- Reconfigurable, reusable

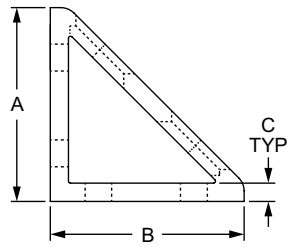

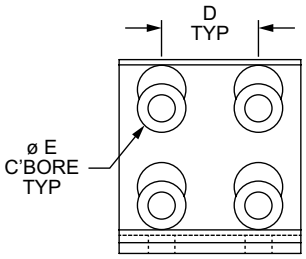

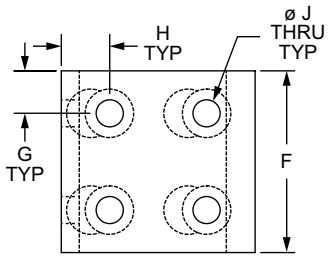

Part No.	Series	Material	Alloy	Finish	A	B	C	D	E	F	G	H	J	Weight
4138	10	Aluminum	6005A – T61	Clear Anodize	2.000"	2.000"	.188"	1.000"	.500"	1.875"	.438"	.500"	.281"	.170 lb
4138-Black	10			Black Anodize	2.000"	2.000"	.188"	1.000"	.500"	1.875"	.438"	.500"	.281"	.170 lb
4338	15			Clear Anodize	3.000"	3.000"	.250"	1.500"	.750"	2.812"	.656"	.750"	.328"	.532 lb
4338-Black	15			Black Anodize	3.000"	3.000"	.250"	1.500"	.750"	2.812"	.656"	.750"	.328"	.532 lb
25-4138	25			Clear Anodize	50.00mm	50.00mm	4.00mm	25.00mm	12.70mm	47.00mm	11.00mm	12.50mm	6.80mm	.0662 kg
25-4138-Black	25			Black Anodize	50.00mm	50.00mm	4.00mm	25.00mm	12.70mm	47.00mm	11.00mm	12.50mm	6.80mm	.0662 kg
30-4338	30			Clear Anodize	60.00mm	60.00mm	4.00mm	30.00mm	12.70mm	57.00mm	13.50mm	15.00mm	6.81mm	.1054 kg
30-4338-Black	30			Black Anodize	60.00mm	60.00mm	4.00mm	30.00mm	12.70mm	57.00mm	13.50mm	15.00mm	6.81mm	.1054 kg
40-4338	40			Clear Anodize	80.00mm	80.00mm	6.00mm	40.00mm	20.00mm	76.00mm	18.00mm	20.00mm	8.30mm	.2626 kg
40-4338-Black	40			Black Anodize	80.00mm	80.00mm	6.00mm	40.00mm	20.00mm	76.00mm	18.00mm	20.00mm	8.30mm	.2626 kg
45-4338	45			Clear Anodize	90.00mm	90.00mm	6.00mm	45.00mm	20.00mm	87.00mm	21.00mm	22.50mm	8.33mm	.3633 kg
45-4338-Black	45			Black Anodize	90.00mm	90.00mm	6.00mm	45.00mm	20.00mm	87.00mm	21.00mm	22.50mm	8.33mm	.3633 kg

Suggested Hardware (Mount to T-Slot)

Part No.	Series	Qty.	Bolt	T-Nut
3393	10	8	1/4-20 x 1/2" BHSCS	Economy
3320	15	8	5/16-18 x 11/16" FBHSCS	Economy
75-3404	25	8	M6 x 10mm BHSCS	Economy
75-3600	30	8	M6 x 12mm BHSCS	Drop-In
75-3422	40	8	M8 x 16mm BHSCS	Economy
75-3619	45	8	M8 x 18mm BHSCS	Drop-In

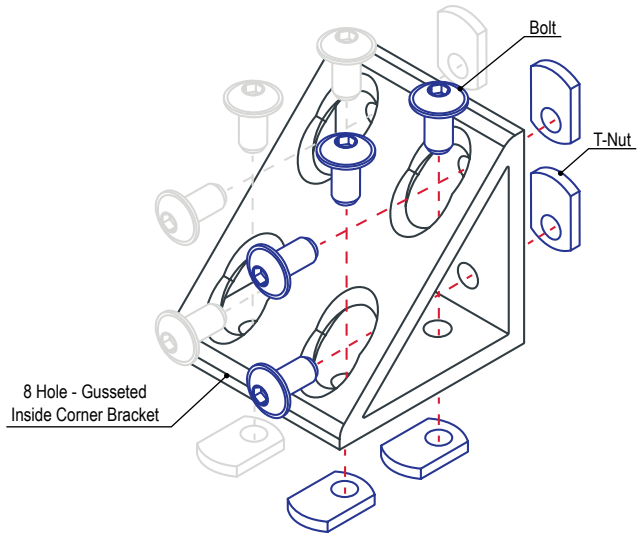

External Fasteners

3 Way - Triangular Corner Bracket

- Corner connection between three profiles
- Method recessed within corner of connection
- Requires end tap machining service (pg. 10-3)
- Triangular corner bracket covers (pg. 8-15)

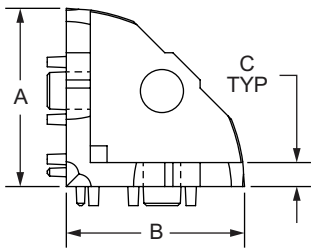

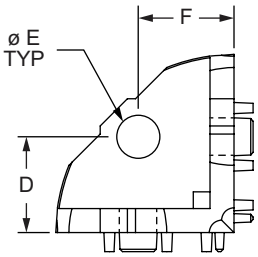

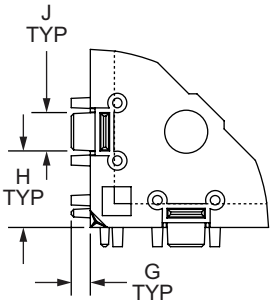

Part No.	Series	Material	Finish	A	B	C	D	E	F	G	H	J	Weight
14113	15	Zinc	Natural	1.465"	1.465"	.197"	.787"	.354"	.787"	.157"	.630"	.315"	.148 lb
14114	40			37.20mm	37.20mm	5.00mm	20.00mm	9.00mm	20.00mm	4.00mm	16.00mm	8.00mm	.0763 kg

Required Machining Services

Machining Type	Machined	Reference Page
Tap Profile End	Mounting Profiles	10-3

Suggested Hardware (Mount to Profile End)

Part No.	Series	Qty.	Bolt
3114	15	3	5/16-18 x 3/4 BHSCS
11-8320	40	3	M8 x 20mm BHSCS

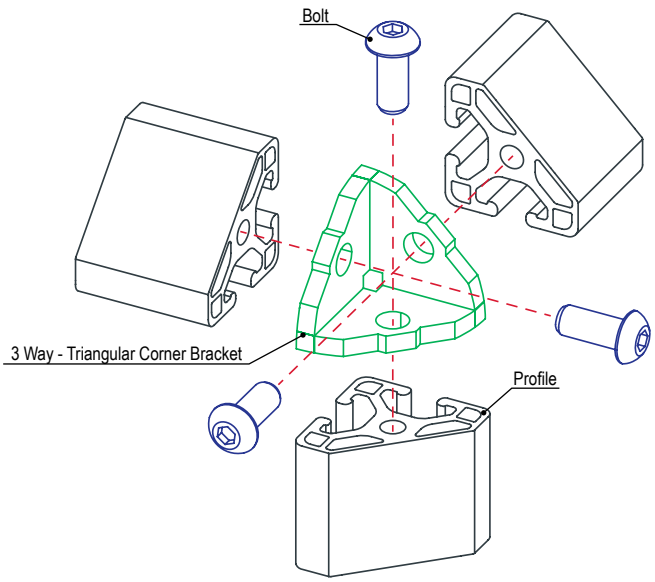

80/20 BUILD YOUR IDEA
More on 80/20® products available at 8020.net

3 Way - Rounded Corner Bracket

- Corner connection between three profiles
- Method recessed within corner of connection
- Requires end tap machining service (pg. 10-3)
- Triangular corner bracket covers (pg. 8-15)

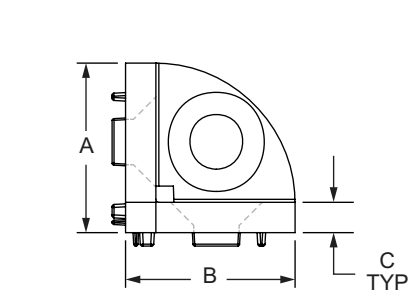

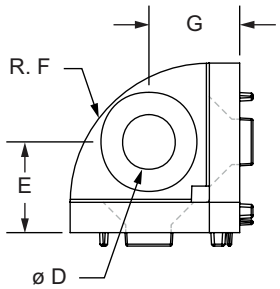

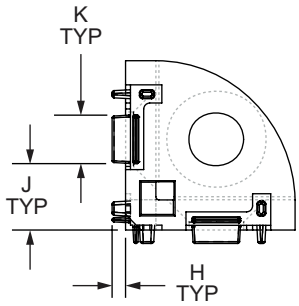

Part No.	Series	Material	Finish	A	B	C	D	E	F	G	H	J	K	Weight
14112	30	Zinc	Natural	28.00mm	28.00mm	5.00mm	9.00mm	15.00mm	23.00mm	15.00mm	2.20mm	11.00mm	8.00mm	.0367 kg

Required Machining Services

Machining Type	Machined	Reference Page
Tap Profile End	Mounting Profiles	10-3

Suggested Hardware (Mount to Profile End)

Part No.	Series	Qty.	Bolt
11-8716	30	3	M8 x 16mm Black Zinc FHSCS

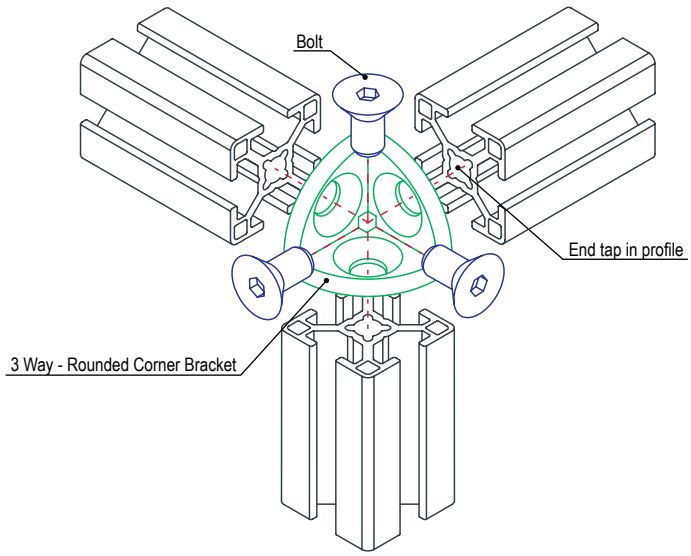

External Fasteners

2 Way - Light Squared Corner Connector

- Corner connection between two profiles
- Two access holes to install hardware
- Requires end tap machining service (pg. 10-3)
- Cover caps included

Part Number: 14170 and 14174

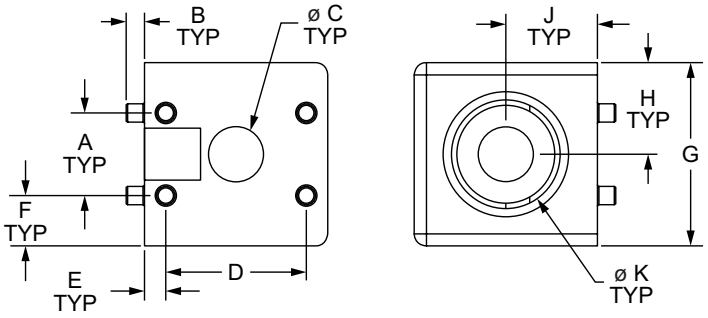

Part Number: 14154, 14176, 14172

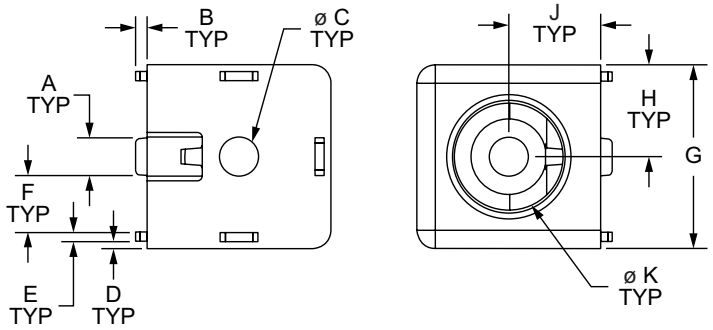

Part No.	Series	Material	Finish	A	B	C	D	E	F	G	H	J	K	Weight
14154	10 25	Aluminum	Lacquered	.244"	.098"	.283"	.039"	.079"	.256"	.992"	.496"	.496"	.470"	.110 lb
14176	15			.315"	.118"	.335"	.059"	.098"	.441"	1.500"	.750"	.750"	.705"	.225 lb
14170	30			13.50mm	3.00mm	9.00mm	22.20mm	3.50mm	8.25mm	30.00mm	15.00mm	15.00mm	17.80mm	.0513 kg
14172	40			8.20mm	2.50mm	8.50mm	1.50mm	2.00mm	12.40mm	40.00mm	20.00mm	20.00mm	24.00mm	.1194 kg
14174	45			16.00mm	4.00mm	13.00mm	29.00mm	8.00mm	14.50mm	45.00mm	22.50mm	22.50mm	23.70mm	.1821 kg

Required Machining Services

Machining Type	Machined	Reference Page
Tap Profile End	Mounting Profiles	10-3

Suggested Hardware (Mount to Profile End)

Part No.	Series	Qty.	Bolt
3063	10	2	1/4-20 x 5/8" BHSCS
3118	15	2	5/16-18 x 1" BHSCS
11-6316	25	2	M6 x 16mm BHSCS
11-8720	30 40	2	M8 x 20mm FHSCS
13003	45	2	M12 x 30mm BHSCS

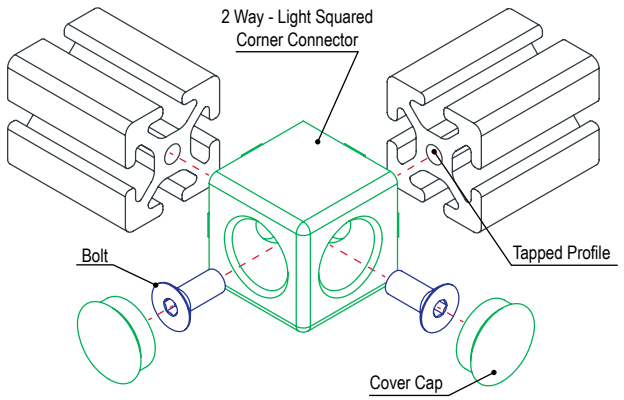

80/20 BUILD YOUR IDEA
More on 80/20® products available at 8020.net

3 Way - Light Squared Corner Connector

- Corner connection between three profiles
- Three access holes to install hardware
- Requires end tap machining service (pg. 10-3)
- Cover caps included

Part Number: 14135, 14177, 14171, 14175

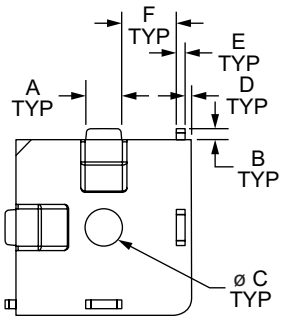

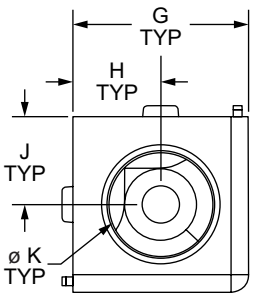

Part Number: 14173

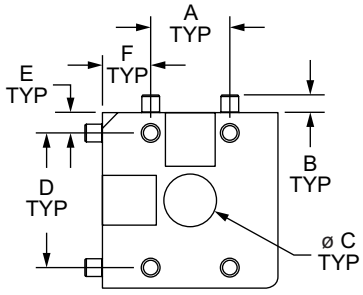

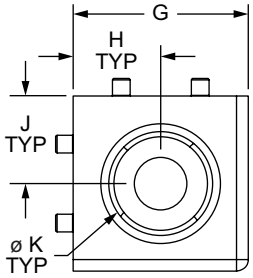

Part No.	Series	Material	Finish	A	B	C	D	E	F	G	H	J	K	Weight
14135	10 25	Aluminum	Lacquered	.244"	.098"	.283"	.039"	.079"	.256"	.992"	.496"	.496"	.470"	.090 lb
14177	15			.315"	.118"	.335"	.059"	.098"	.439"	1.500"	.750"	.750"	.705"	.191 lb
14171	30			13.50mm	3.00mm	9.00mm	23.00mm	3.50mm	8.25mm	30.00mm	15.00mm	15.00mm	17.80mm	.0418 kg
14173	40			8.50mm	2.00mm	8.50mm	1.50mm	2.00mm	12.25mm	40.00mm	20.00mm	20.00mm	23.70mm	.1022 kg
14175	45			16.00mm	4.00mm	13.00mm	29.00mm	8.00mm	14.50mm	45.00mm	22.50mm	22.50mm	23.70mm	.1591 kg

Required Machining Services

Machining Type	Machined	Reference Page
Tap Profile End	Mounting Profiles	10-3

Suggested Hardware (Mount to Profile End)

Part No.	Series	Qty.	Bolt
3063	10	3	1/4-20 x 5/8" BHSCS
3118	15	3	5/16-18 x 1" BHSCS
11-6316	25	3	M6 x 16mm BHSCS
11-8720	30 40	3	M8 x 20mm FHSCS
13003	45	3	M12 x 30mm BHSCS

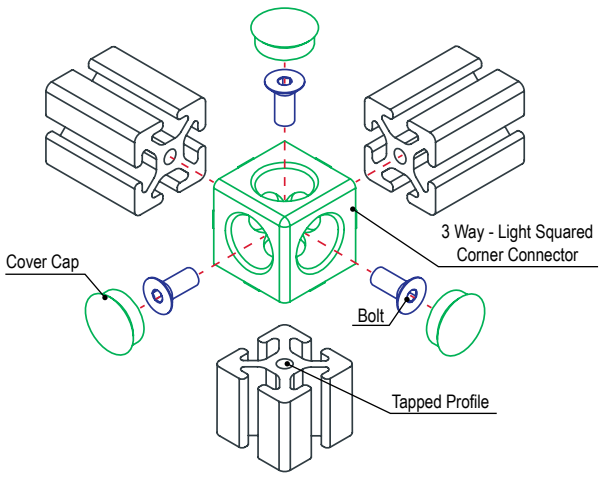

External Fasteners

3 Way - Squared Corner Connector

- Corner connection between three profiles
- Requires end tap machining service (pg. 10-3)

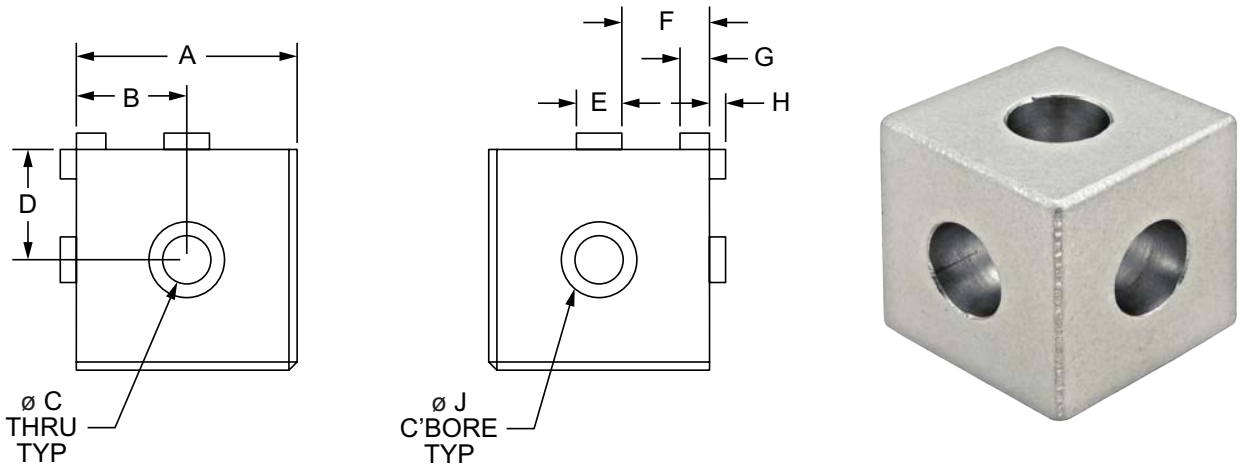

Part No.	Series	Material	Alloy	Finish	A	B	C	D	E	F	G	H	J	Weight
4042	10	Aluminum	6005A – T61	Clear Anodize	1.000"	.500"	.257"	.500"	.244"	.378"	.117"	.087"	.406"	.074 lb
4042-Black	10			Black Anodize	1.000"	.500"	.257"	.500"	.244"	.378"	.117"	.087"	.406"	.074 lb
4442	15			Clear Anodize	1.500"	.750"	.328"	.750"	.310"	.595"	.200"	.110"	.515"	.265 lb
4442-Black	15			Black Anodize	1.500"	.750"	.328"	.750"	.310"	.595"	.200"	.110"	.515"	.265 lb

Required Machining Services

Machining Type	Machined	Reference Page
Tap Profile End	Mounting Profiles	10-3

Suggested Hardware (Mount to Profile End)

Part No.	Series	Qty.	Bolt
3017	10	3	1/4-20 x 1" Low Head Socket Cap Screw
3018	15	3	5/16-18 x 1.25" Low Head Socket Cap Screw

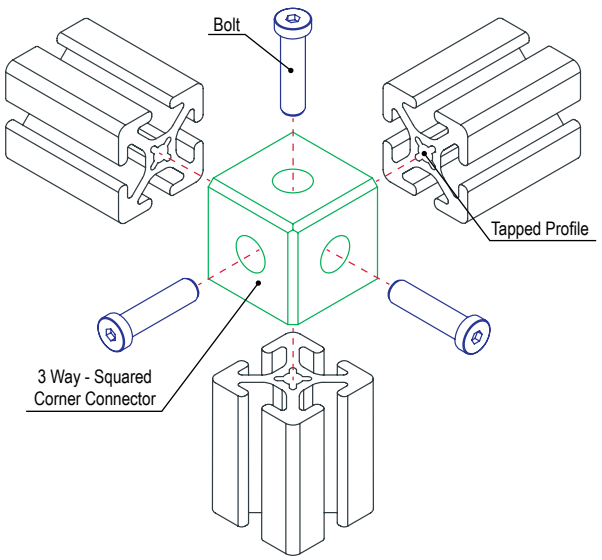

80/20 BUILD YOUR IDEA
More on 80/20® products available at 8020.net

3 Way - Rounded Corner Connector

- Connection between three quarter round profiles
- Requires end tap machining service (pg. 10-3)

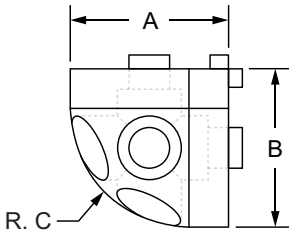

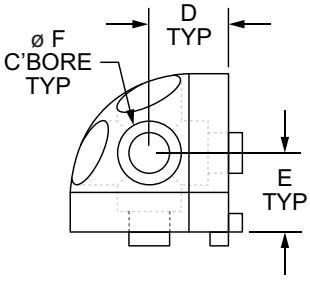

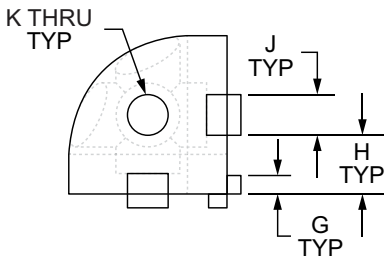

Part No.	Series	Material	Alloy	Finish	A	B	C	D	E	F	G	H	J	K	Weight
4041	10	Aluminum	6005A – T61	Clear Anodize	1.000"	1.000"	.750"	.500"	.500"	.406"	.117"	.378"	.244"	.257"	.049 lb
4041-Black	10			Black Anodize	1.000"	1.000"	.750"	.500"	.500"	.406"	.117"	.378"	.244"	.257"	.049 lb
4441	15			Clear Anodize	1.500"	1.500"	1.125"	.750"	.750"	.515"	.200"	.595"	.310"	.328"	.213 lb
4441-Black	15			Black Anodize	1.500"	1.500"	1.125"	.750"	.750"	.515"	.200"	.595"	.310"	.328"	.213 lb
40-4443	40			Clear Anodize	40.00mm	40.00mm	30.00mm	20.00mm	20.00mm	13.50mm	5.10mm	16.13mm	7.75mm	8.30mm	.1025 kg
40-4443-Black	40			Black Anodize	40.00mm	40.00mm	30.00mm	20.00mm	20.00mm	13.50mm	5.10mm	16.13mm	7.75mm	8.30mm	.1025 kg

Required Machining Services

Machining Type	Machined	Reference Page
Tap Profile End	Mounting Profiles	10-3

Suggested Hardware (Mount to Profile End)

Part No.	Series	Qty.	Bolt
3017	10	3	1/4-20 x 1" Low Head Socket Cap Screw
3018	15	3	5/16-18 x 1.25" Low Head Socket Cap Screw
11-8525	40	3	M8 x 25mm SHCS

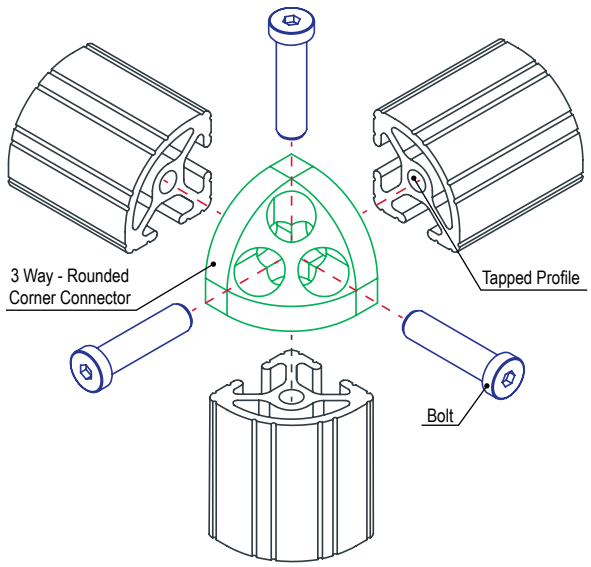

External Fasteners

3 Way - Triangular Corner Connector

- Connection between three angled profiles
- Requires end tap machining service (pg. 10-3)

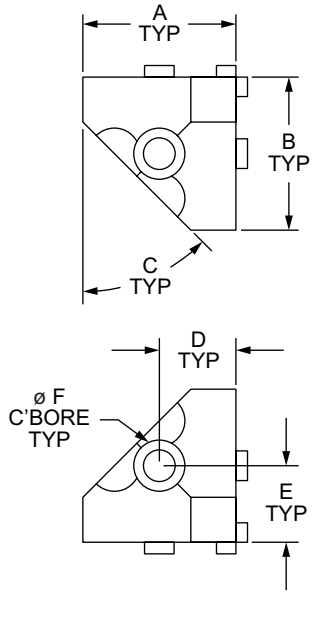

Part No.	Series	Material	Alloy	Finish	A	B	C	D	E	F	G	H	J	K	Weight
40-4441	40	Aluminum	6005A – T61	Clear Anodize	40.00mm	40.00mm	45°	20.00mm	20.00mm	13.50mm	5.10mm	16.13mm	7.75mm	8.30mm	.0677 kg
40-4441-Black	40			Black Anodize	40.00mm	40.00mm	45°	20.00mm	20.00mm	13.50mm	5.10mm	16.13mm	7.75mm	8.30mm	.0677 kg

Required Machining Services

Machining Type	Machined	Reference Page
Tap Profile End	Mounting Profiles	10-3

Suggested Hardware (Mount to Profile End)

Part No.	Series	Qty.	Bolt
11-8525	40	3	M8 x 25mm SHCS

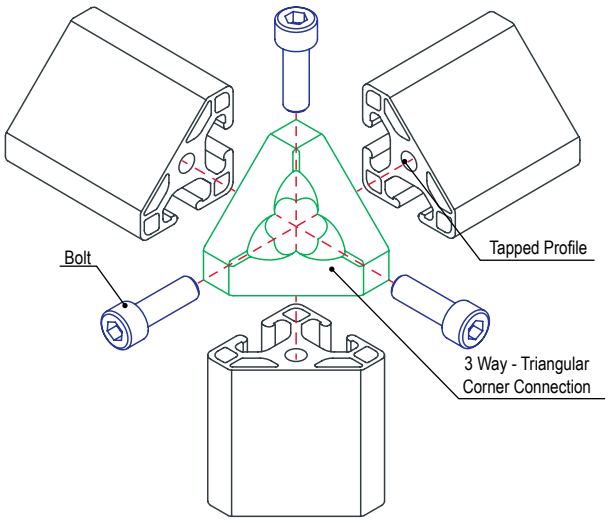

80/20 BUILD YOUR IDEA
More on 80/20® products
available at 8020.net

Standard Angle Clamp Block

- No machining required
- Sold in pairs
- Tab grips into mating profile
- Provides range of various angles

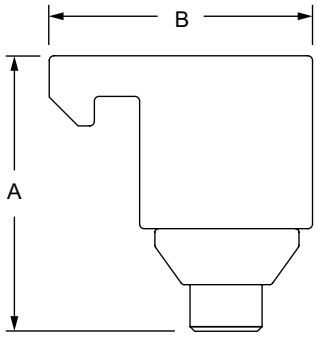

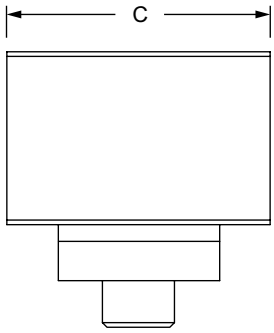

Part No.	Series	Material	Alloy	Finish	A	B	C	Weight
4174	10	Aluminum	6005A – T61	Clear Anodize	.690"	.710"	.710"	.063 lb
4174-Black	10			Black Anodize	.690"	.710"	.710"	.063 lb
4468	15			Clear Anodize	1.195"	1.142"	1.142"	.218 lb
4468-Black	15			Black Anodize	1.195"	1.142"	1.142"	.218 lb

Included Hardware (Mount to T-Slot)

Part No.	Series	Qty.	Description
3048	10	2	10-32 x 1/2" SHCS
3276	10	2	Slide-in Economy T-Nut
3119	15	2	5/16-18 x 7/8" SHCS
3203	15	2	Standard Slide-in T-Nut

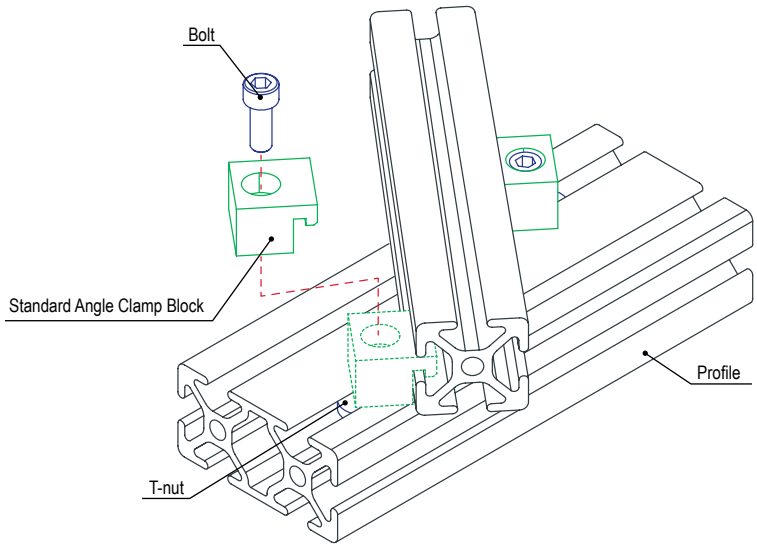

External Fasteners

2 Hole - Pivot Joint

- Mounts to end of profile or open T-slot
- Adjust screws for movement of fixed position
- Requires end tap machining for profile end (pg. 10-3)
- Slot tabs removable for T-slot mounting

Part Number: 14011, 14016, 14017

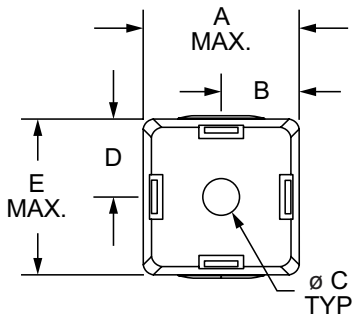

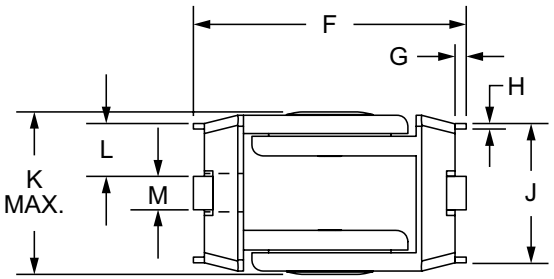

Part Number: 14014

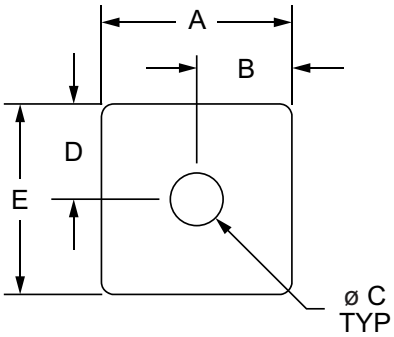

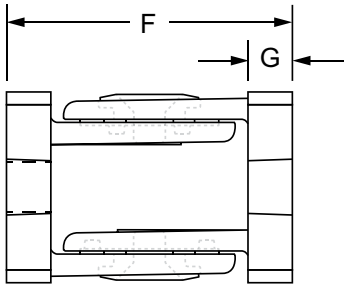

Part Number: 14018 and 14019

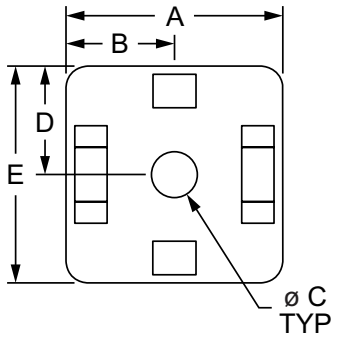

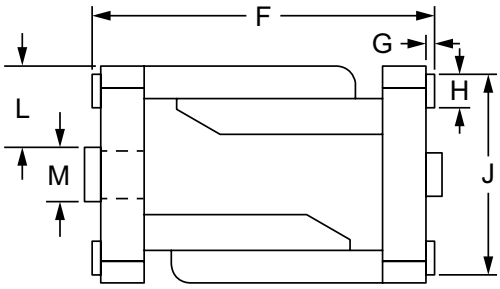

80/20 BUILD YOUR IDEA
More on 80/20® products available at 8020.net

2 Hole - Pivot Joint (Continued)

Part No.	Series	A	B	C	D	E	F	G	H	J	K	L	M	Weight
14011*	10 25	28.00mm	14.00mm	6.60mm	14.00mm	28.00mm	49.00mm	2.00mm	1.00mm	25.00mm	29.20mm	9.50mm	6.00mm	.1225 kg
14017*	15	1.570"	.790"	.340"	.790"	1.570"	2.520"	.079"	.039"	1.378"	1.575"	.531"	.315"	.641 lb
14014**	30	30.00mm	15.00mm	8.30mm	15.00mm	30.00mm	45.00mm	7.00mm	—	—	—	—	—	.1412 kg
14016*	30	30.00mm	15.00mm	8.30mm	15.00mm	30.00mm	50.00mm	2.50mm	1.00mm	29.00mm	30.00mm	10.50mm	8.30mm	.1375 kg
14018***	40	40.00mm	20.00mm	8.50mm	20.00mm	40.00mm	63.20mm	1.60mm	6.20mm	37.00mm	—	15.00mm/ 16.00mm	8.00mm/ 10.00mm	.2699 kg
14019***	45	45.00mm	22.50mm	8.50mm	22.50mm	45.00mm	63.60mm	1.80mm	6.20mm	42.00mm	—	16.00mm/ 17.00mm	8.00mm/ 10.00mm	.3268 kg

* Break off tabs
** No slot tabs available
*** Insert tabs available in M8 and M10

Material Specifications

Material	Process	Finish
Zinc	Die Cast	Powder Coat

2-Hole Pivot Joint Machining Services

Machining Type	Profile Machined	Reference Page
End Tap	Mounting Profile	10-3

Suggested Hardware (Mount to T-Slot)

Part No.	Series	Qty.	Bolt	T-Nut
3491	10	2	1/4-20 x 1/2" SHCS	Economy
3456	15	2	5/16-18 x 5/8" SHCS	Drop-In
75-3592	25	2	M6 x 14mm SHCS	Slide-In
75-3595	30	2	M6 x 16mm SHCS	Drop-In
75-3625	40	2	M8 x 16mm SHCS	Slide-In
75-3623	45	2	M8 x 16mm SHCS	Drop-In

Suggested Hardware (Mount to Profile End)

Part No.	Series	Qty.	Bolt
3064	10	2	1/4-20 x 3/4" SHCS
3122	15	2	5/16-18 x 1" SHCS
11-6518	25	2	M6 x 18mm SHCS
11-8525*	30 40 45	2	M8 x 25mm SHCS
14196*	45	2	Threaded Insert

* 45 series requires two SHCS and two threaded inserts

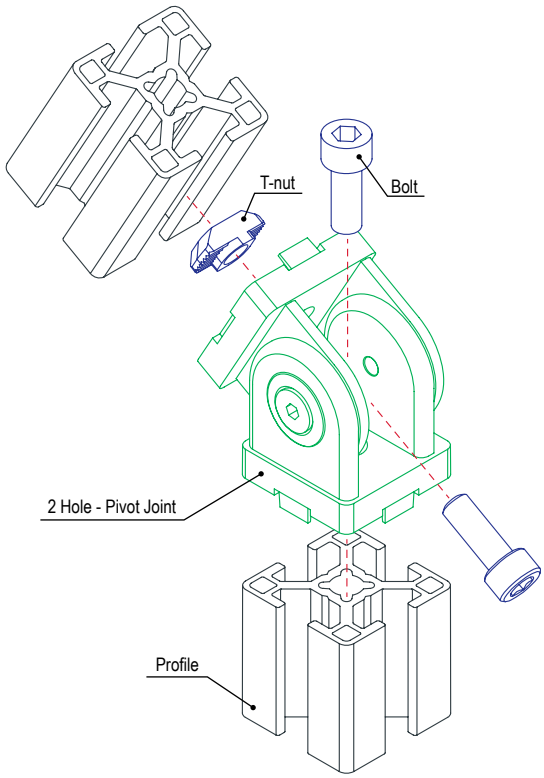

External Fasteners

Economy Angle Clamp Block

- No machining required
- Provides range of adjustability
- Tab grips into mating profile
- Connects profiles at variable angles

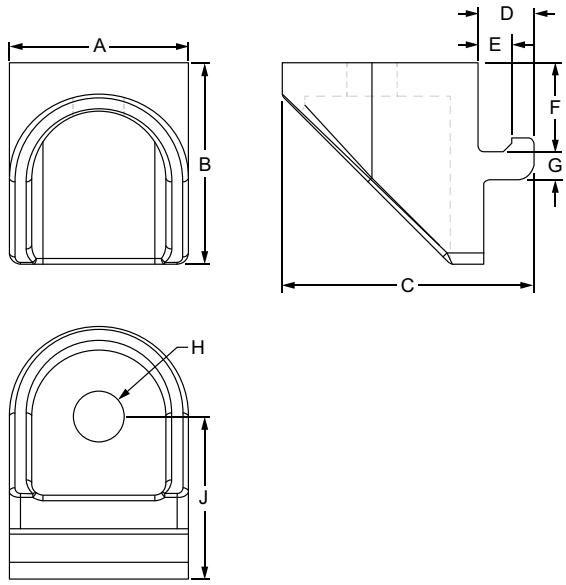

Part No.	Series	Material	Process	Finish	A	B	C	D	E	F	G	H	J	Weight
14117	40	Zinc	Die Cast	Powder Coat	32.00mm	36.00mm	45.00mm	10.00mm	6.00mm	15.90mm	5.00mm	9.00mm	26.00mm	.1026 kg

Suggested Hardware (Mount to T-Slot)

Part No.	Series	Qty.	Bolt	T-Nut
75-3625	40	1	M8 x 16mm SHCS	Slide-In

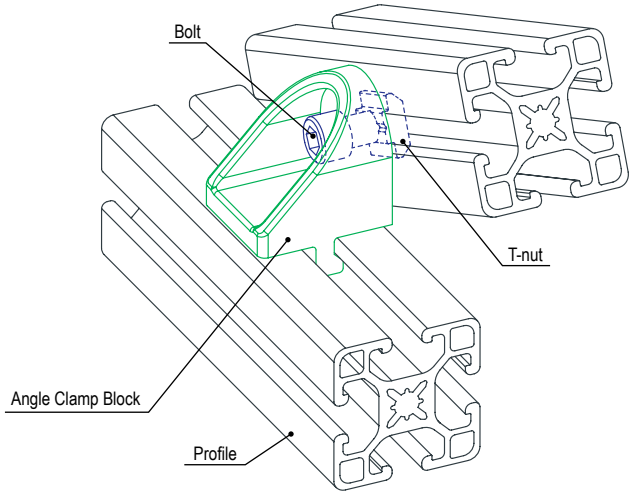

80/20 BUILD YOUR IDEA
More on 80/20® products available at 8020.net

3 Hole - Recessed Straight Pivot Plate

- No machining required
- Pre-load to simplify assembly
- Used in pairs to create a custom angle between profiles
- Recess replaces need for a nub in a pivot assembly

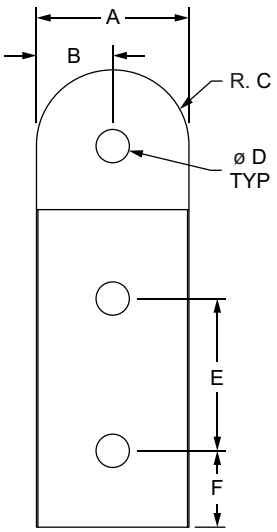

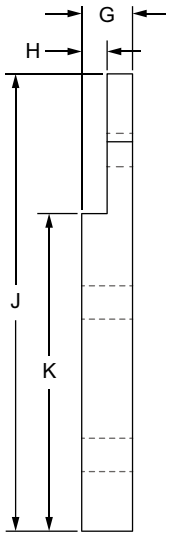

Part No.	Series	Material	Alloy	Process	Finish	A	B	C	D	E	F	G	H	J	K	Weight
4390	15	Aluminum	6005A – T61	Milled	Clear Anodize	1.500"	.750"	.755"	.328"	1.500"	.750"	.500"	.250"	4.500"	3.000"	.255 lb
4390-Black	15				Black Anodize	1.500"	.750"	.755"	.328"	1.500"	.750"	.500"	.250"	4.500"	3.000"	.255 lb
40-4390	40				Clear Anodize	40.00mm	20.00mm	20.00mm	8.30mm	40.00mm	20.00mm	12.00mm	6.00mm	120.00mm	80.00mm	.0550 kg
40-4390-Black	40				Black Anodize	40.00mm	20.00mm	20.00mm	8.30mm	40.00mm	20.00mm	12.00mm	6.00mm	120.00mm	80.00mm	.0550 kg

Suggested Hardware (Mount to T-Slot)

Part No.	Series	Qty.	Bolt	T-Nut	Washer
3443	15	2	5/16-18 x 1" BHSCS	Economy	Yes
75-3427	40	2	M8 x 25mm BHSCS	Economy	Yes

Suggested Hardware (Mount to Pivot Plate)

Part No.	Series	Qty.	Description
3446	15	1	5/16-18 x 7/8" SHCS, Washer & Hex Nut
75-3434	40	1	M8 x 25mm SHCS, Washer & Hex Nut

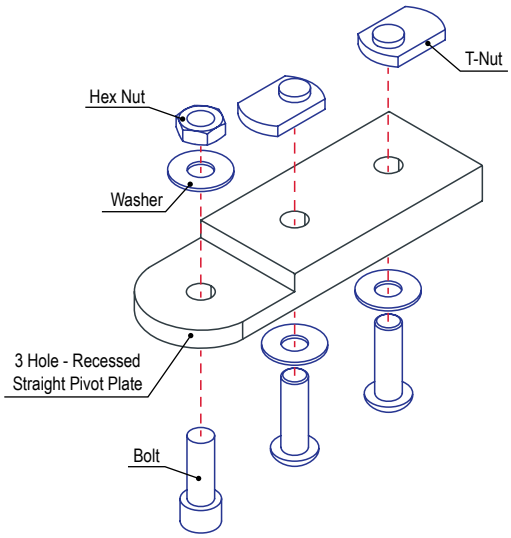

External Fasteners

3 Hole - Triangular Pivot Plate

- No machining required
- Pre-load to simplify assembly
- Creates a structured angle connection between profiles
- Used with nub or mounted directly to T-slot

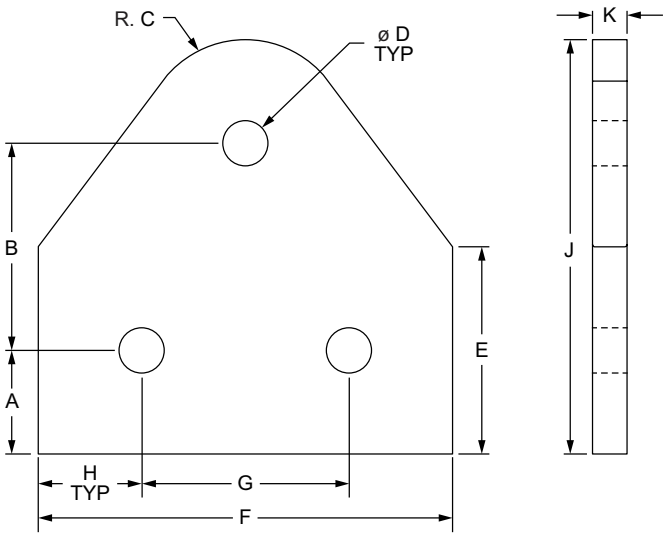

Part No.	Series	Material	Alloy	Process	Finish	A	B	C	D	E	F	G	H	J	K	Weight
4372	15	Aluminum	6005A – T61	Milled	Clear Anodize	.750"	1.500"	.750"	.328"	1.500"	3.000"	1.500"	.750"	3.000"	.250"	.168 lb
4372-Black	15				Black Anodize	.750"	1.500"	.750"	.328"	1.500"	3.000"	1.500"	.750"	3.000"	.250"	.168 lb
40-4372	40				Clear Anodize	20.00mm	40.00mm	20.00mm	8.30mm	40.00mm	80.00mm	40.00mm	20.00mm	80.00mm	6.00mm	.0811 kg
40-4372-Black	40				Black Anodize	20.00mm	40.00mm	20.00mm	8.30mm	40.00mm	80.00mm	40.00mm	20.00mm	80.00mm	6.00mm	.0811 kg

Suggested Hardware (Mount to T-slot)

Part No.	Series	Qty.	Bolt	T-Nut
3320	15	3	5/16-18 x 11/16" FBHSCS	Economy
75-3422	40	3	M8 x 16mm BHSCS	Economy

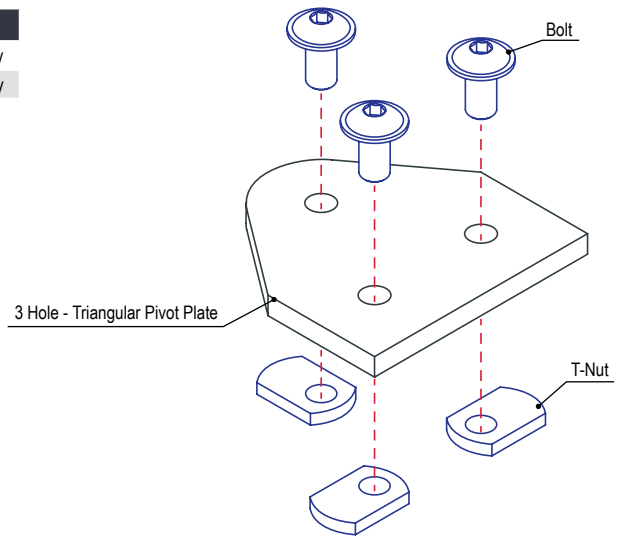

80/20 BUILD YOUR IDEA
More on 80/20® products available at 8020.net

3 Hole - Recessed Triangular Pivot Plate

- No machining required
- Pre-load to simplify assembly
- Used in pairs to create a custom angle between profiles
- Recess replaces need for a nub in a pivot assembly

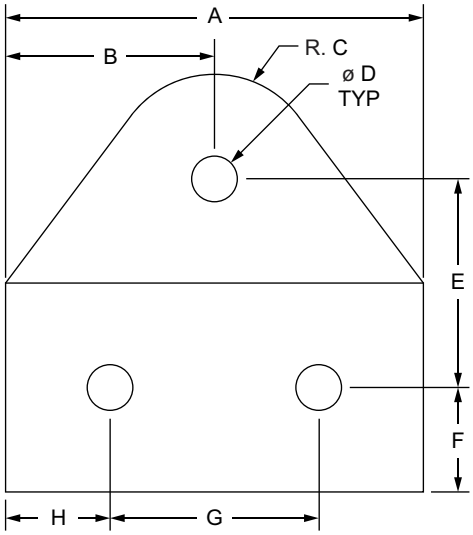

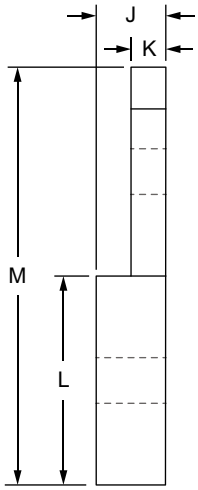

Part No.	Series	Material	Alloy	Process	Finish	A	B	C	D	E	F	G	H	J	K	L	M	Weight
4392	15	Aluminum	6005A – T61	Milled	Clear Anodize	3.000"	1.500"	.750"	.328"	1.500"	.750"	1.500"	.750"	.500"	.250"	1.500"	3.000"	.272 lb
4392-Black	15				Black Anodize	3.000"	1.500"	.750"	.328"	1.500"	.750"	1.500"	.750"	.500"	.250"	1.500"	3.000"	.272 lb

Suggested Hardware (Mount to T-Slot)

Part No.	Series	Qty.	Bolt	T-Nut	Washer
3443	15	2	5/16-18 x 1" BHSCS	Economy	Yes

Suggested Hardware (Mount to Pivot Plate)

Part No.	Series	Qty.	Description
3446	15	1	5/16-18 x 7/8" SHCS, Washer & Hex Nut

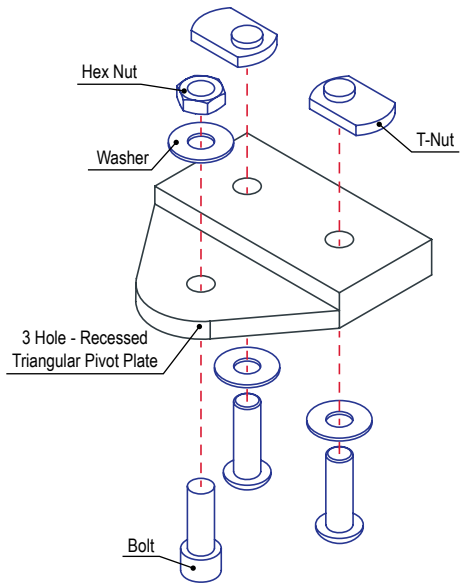

External Fasteners

5 Hole - Triangular Pivot Plate

- No machining required
- Pre-load to simplify assembly
- Creates a structured angle connection between profiles
- Used with nub or mounted directly to T-slot

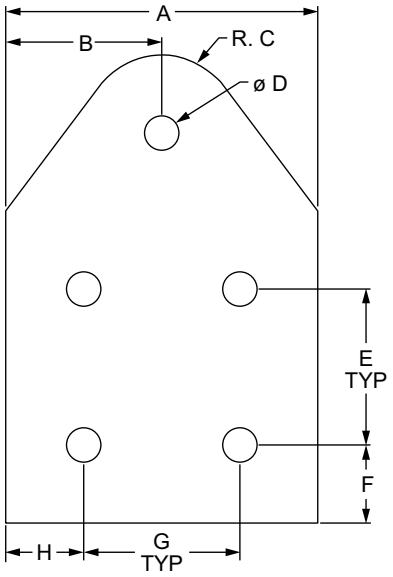

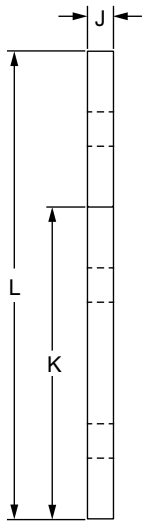

Part No.	Series	Material	Alloy	Process	Finish	A	B	C	D	E	F	G	H	J	K	L	Weight
4371	15	Aluminum	6005A – T61	Milled	Clear Anodize	3.000"	1.500"	.750"	.328"	1.500"	.750"	1.500"	.750"	.250"	3.000"	4.500"	.267 lb
4371-Black	15				Black Anodize	3.000"	1.500"	.750"	.328"	1.500"	.750"	1.500"	.750"	.250"	3.000"	4.500"	.267 lb

Suggested Hardware (Mount to T-Slot)

Part No.	Series	Qty.	Bolt	T-Nut
3320	15	4	5/16-18 x 11/16" FBHSCS	Economy

Suggested Hardware (Mount to Pivot Nub)

Part No.	Series	Qty.	Bolt
3330	15	1	5/16-18 x 11/16" FBHSCS

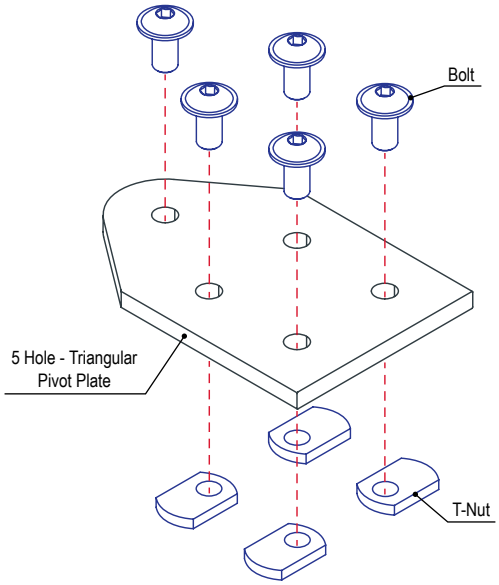

80/20 BUILD YOUR IDEA
More on 80/20® products
available at 8020.net

5 Hole - Recessed Triangular Pivot Plate

- No machining required
- Pre-load to simplify assembly
- Used in pairs to create a custom angle between profiles
- Recess replaces need for a nub in a pivot assembly

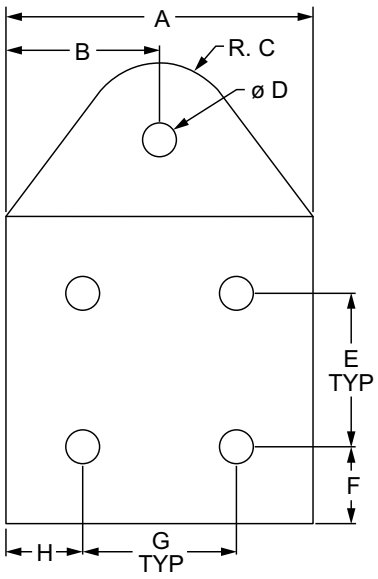

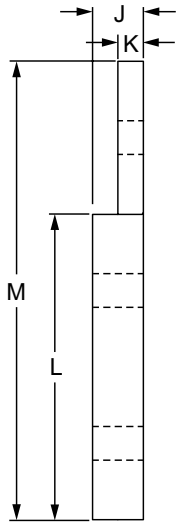

Part No.	Series	Material	Alloy	Process	Finish	A	B	C	D	E	F	G	H	J	K	L	M	Weight
4394	15	Aluminum	6005A – T61	Milled	Clear Anodize	3.000"	1.500"	.750"	.328"	1.500"	.750"	1.500"	.750"	.500"	.250"	3.000"	4.500"	.485 lb
4394-Black	15				Black Anodize	3.000"	1.500"	.750"	.328"	1.500"	.750"	1.500"	.750"	.500"	.250"	3.000"	4.500"	.485 lb
40-4394	40				Clear Anodize	80.00mm	40.00mm	20.00mm	8.30mm	40.00mm	20.00mm	40.00mm	20.00mm	12.00mm	6.00mm	80.00mm	120.00mm	.2287 kg
40-4394-Black	40				Black Anodize	80.00mm	40.00mm	20.00mm	8.30mm	40.00mm	20.00mm	40.00mm	20.00mm	12.00mm	6.00mm	80.00mm	120.00mm	.2287 kg

Suggested Hardware (Mount to T-Slot)

Part No.	Series	Qty.	Bolt	T-Nut	Washer
3443	15	4	5/16-18 x 1" BHSCS	Economy	Yes
75-3427	40	4	M8 x 25mm BHSCS	Economy	Yes

Suggested Hardware (Mount to Pivot Plate)

Part No.	Series	Qty.	Description
3446	15	1	5/16-18 x 7/8" SHCS, Washer & Hex Nut
75-3434	40	1	M8 x 25mm SHCS, Washer & Hex Nut

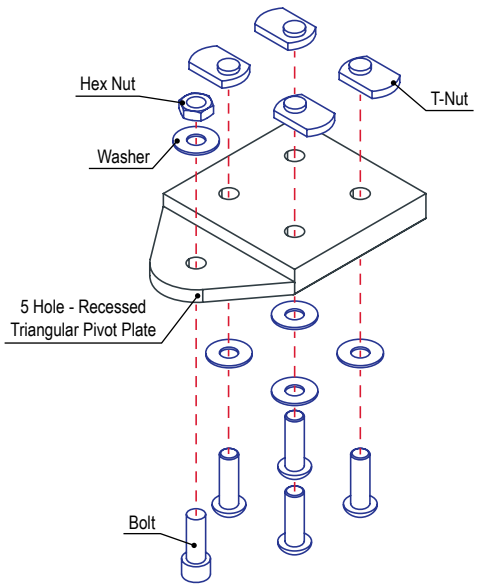

External Fasteners

0 Degree Structural Pivot Nub

- No machining required
- Parallel to mounting profile
- Creates structural pivot ranging from 0-180 degrees
- Slot tab helps prevent rotation, assists in alignment with T-slot

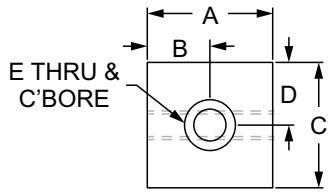

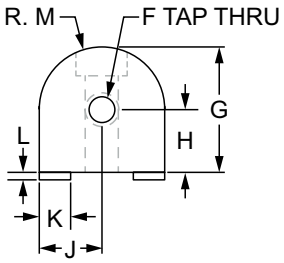

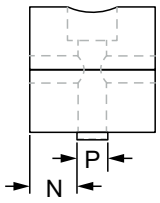

Part No.	Series	Color	A	B	C	D	E	F	G	H	J	K	L	M	N	P	Weight
4187	10	Clear	1.000"	.500"	1.000"	.500"	1/4	1/4-20	1.000"	.500"	.500"	.250"	.060"	.500"	.377"	.245"	.102 lb
4187-Black	10	Black	1.000"	.500"	1.000"	.500"	1/4	1/4-20	1.000"	.500"	.500"	.250"	.060"	.500"	.377"	.245"	.102 lb
4387	15	Clear	1.500"	.750"	1.500"	.750"	5/16	5/16-18	1.500"	.750"	.750"	.312"	.100"	.750"	.594"	.312"	.312 lb
4387-Black	15	Black	1.500"	.750"	1.500"	.750"	5/16	5/16-18	1.500"	.750"	.750"	.312"	.100"	.750"	.594"	.312"	.312 lb
25-4187	25	Clear	25.00mm	12.50mm	25.00mm	12.50mm	M6	M6 x 1.0	25.00mm	12.50mm	12.50mm	6.15mm	1.10mm	12.50mm	9.35mm	6.30mm	.0405 kg
25-4187-Black	25	Black	25.00mm	12.50mm	25.00mm	12.50mm	M6	M6 x 1.0	25.00mm	12.50mm	12.50mm	6.15mm	1.10mm	12.50mm	9.35mm	6.30mm	.0405 kg
40-4387	40	Clear	40.00mm	20.00mm	40.00mm	20.00mm	M8	M8 x 1.25	40.00mm	20.00mm	20.00mm	7.92mm	2.13mm	20.00mm	16.03mm	7.92mm	.1549 kg
40-4387-Black	40	Black	40.00mm	20.00mm	40.00mm	20.00mm	M8	M8 x 1.25	40.00mm	20.00mm	20.00mm	7.92mm	2.13mm	20.00mm	16.03mm	7.92mm	.1549 kg

Material Specifications

Material	Alloy	Process	Finish
Aluminum	6005A – T61	Milled	Anodize

Included Hardware (Mount Nub to T-Slot)

Part No.	Series	Qty.	Bolt	T-Nut
3306	10	1	1/4-20 x 1" SHCS	Economy
3613	15	1	5/16-18 x 1.5" SHCS	Economy
75-3415	25	1	M6 x 25mm SHCS	Economy
75-3479	40	1	M8 x 40mm SHCS	Economy

Suggested Hardware (Mount Arm to Nub)

Part No.	Series	Qty.	Bolt
3342	10	2	1/4-20 x 1/2" FBHSCS
3330	15	2	5/16-18 x 11/16" FBHSCS
13-6312	25	2	M6 x 12mm BHSCS
13-8316	40	2	M8 x 16mm BHSCS

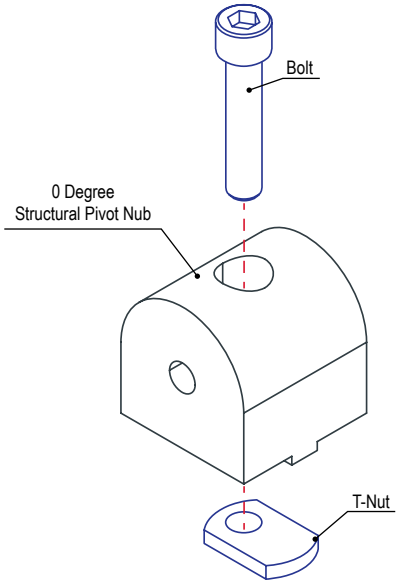

80/20 BUILD YOUR IDEA
More on 80/20® products available at 8020.net

90 Degree Structural Pivot Nub

- No machining required
- Perpendicular to mounting profile
- Creates structural pivot ranging from 0-180 degrees
- Slot tab helps prevent rotation, assists in alignment with T-slot

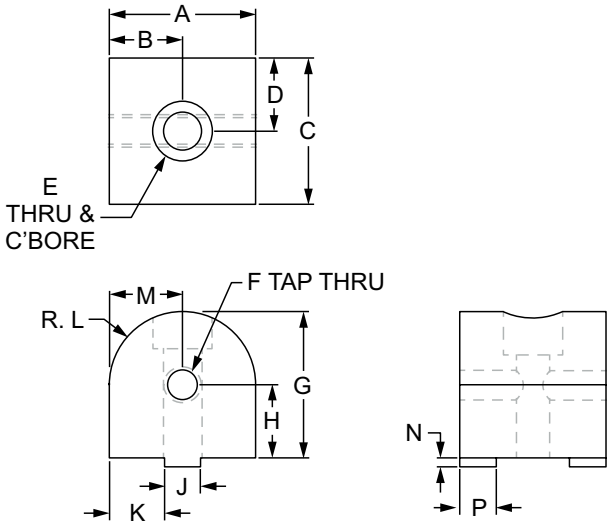

Part No.	Series	Color	A	B	C	D	E	F	G	H	J	K	L	M	N	P	Weight
4188	10	Clear	1.000"	.500"	1.000"	.500"	1/4	1/4-20	1.000"	.500"	.245"	.377"	.500"	.500"	.060"	.250"	.102 lb
4188-Black	10	Black	1.000"	.500"	1.000"	.500"	1/4	1/4-20	1.000"	.500"	.245"	.377"	.500"	.500"	.060"	.250"	.102 lb
4388	15	Clear	1.500"	.750"	1.500"	.750"	5/16	5/16-18	1.500"	.750"	.312"	.594"	.750"	.750"	.100"	.312"	.324 lb
4388-Black	15	Black	1.500"	.750"	1.500"	.750"	5/16	5/16-18	1.500"	.750"	.312"	.594"	.750"	.750"	.100"	.312"	.324 lb
25-4188	25	Clear	25.00mm	12.50mm	25.00mm	12.50mm	M6	M6 x 1.0	25.00mm	12.50mm	6.30mm	9.35mm	12.50mm	12.50mm	1.10mm	6.15mm	.0402 kg
25-4188-Black	25	Black	25.00mm	12.50mm	25.00mm	12.50mm	M6	M6 x 1.0	25.00mm	12.50mm	6.30mm	9.35mm	12.50mm	12.50mm	1.10mm	6.15mm	.0402 kg
40-4388	40	Clear	40.00mm	20.00mm	40.00mm	20.00mm	M8	M8 x 1.25	40.00mm	20.00mm	7.92mm	16.03mm	20.00mm	20.00mm	2.13mm	7.92mm	.1545 kg
40-4388-Black	40	Black	40.00mm	20.00mm	40.00mm	20.00mm	M8	M8 x 1.25	40.00mm	20.00mm	7.92mm	16.03mm	20.00mm	20.00mm	2.13mm	7.92mm	.1545 kg

Material Specifications

Material	Alloy	Process	Finish
Aluminum	6005A – T61	Milled	Anodize

Included Hardware (Mount Nub to T-Slot)

Part No.	Series	Qty.	Bolt	T-Nut
3306	10	1	1/4-20 x 1" SHCS	Economy
3613	15	1	5/16-18 x 1.5" SHCS	Economy
75-3415	25	1	M6 x 25mm SHCS	Economy
75-3479	40	1	M8 x 40mm SHCS	Economy

Suggested Hardware (Mount Arm to Nub)

Part No.	Series	Qty.	Bolt
3342	10	2	1/4-20 x 1/2" FBHSCS
3330	15	2	5/16-18 x 11/16" FBHSCS
13-6312	25	2	M6 x 12mm BHSCS
13-8316	40	2	M8 x 16mm BHSCS

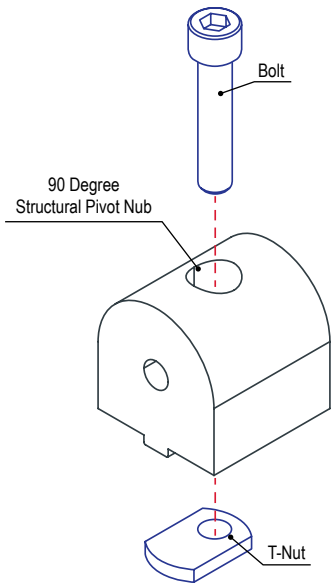

External Fasteners

Universal Structural Pivot Nub

- No machining required
- Repositioning, reusable
- Creates structural pivot ranging from 0-180 degrees
- Parallel or perpendicular to mounting profile

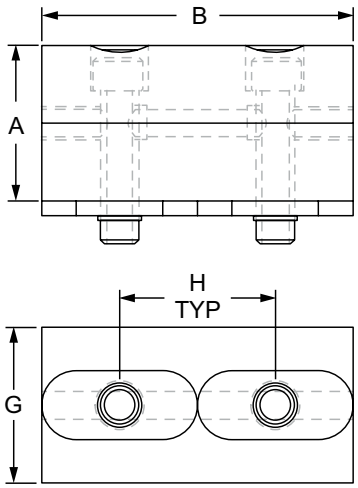

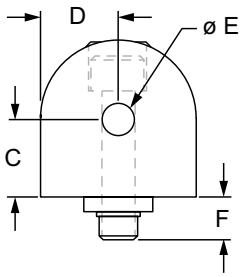

Part No.	Series	Color	A	B	C	D	E	F	G	H	Weight
4186	10	Clear	1.000"	2.000"	.500"	.500"	1/4	.260"	1.000"	1.000"	.202 lb
4186-Black	10	Black	1.000"	2.000"	.500"	.500"	1/4	.260"	1.000"	1.000"	.202 lb
4386	15	Clear	1.500"	3.000"	.750"	.750"	5/16	.450"	1.500"	1.500"	.648 lb
4386-Black	15	Black	1.500"	3.000"	.750"	.750"	5/16	.450"	1.500"	1.500	.648 lb
25-4186	25	Clear	25.00mm	50.00mm	12.50mm	12.50mm	M6	6.89mm	25.00mm	25.00mm	.0885 kg
25-4186-Black	25	Black	25.00mm	50.00mm	12.50mm	12.50mm	M6	6.89mm	25.00mm	25.00mm	.0885 kg
40-4386	40	Clear	40.00mm	80.00mm	20.00mm	20.00mm	M8	11.43mm	40.00mm	40.00mm	.3393 kg
40-4386-Black	40	Black	40.00mm	80.00mm	20.00mm	20.00mm	M8	11.43mm	40.00mm	40.00mm	.3393 kg

Material Specifications

Material	Alloy	Process	Finish
Aluminum	6005A – T61	Milled	Anodize

Included Hardware (Mount Nub to T-Slot)

Part No.	Series	Qty.	Bolt	T-Nut
3306	10	2	1/4-20 x 1" SHCS	Economy
3613	15	2	5/16-18 x 1.5" SHCS	Economy
75-3415	25	2	M6 x 25mm SHCS	Economy
75-3479	40	2	M8 x 40mm SHCS	Economy

Suggested Hardware (Mount Arm to Nub)

Part No.	Series	Qty.	Bolt
3342	10	2	1/4-20 x 1/2" FBHSCS
3330	15	2	5/16-18 x 11/16" FBHSCS
13-6312	25	2	M6 x 12mm BHSCS
13-8316	40	2	M8 x 16mm BHSCS

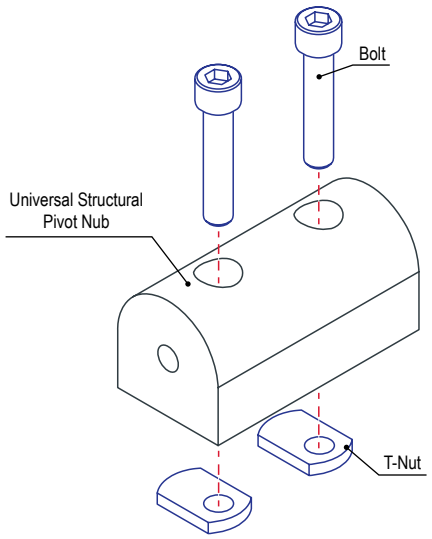

80/20 BUILD YOUR IDEA
More on 80/20® products
available at 8020.net

0 Degree Structural Right Angle Pivot Nub

- No machining required
- Parallel to mounting profile
- Creates structural pivot ranging from 0-180 degrees
- Slot tab helps prevent rotation, assists in alignment with T-slot

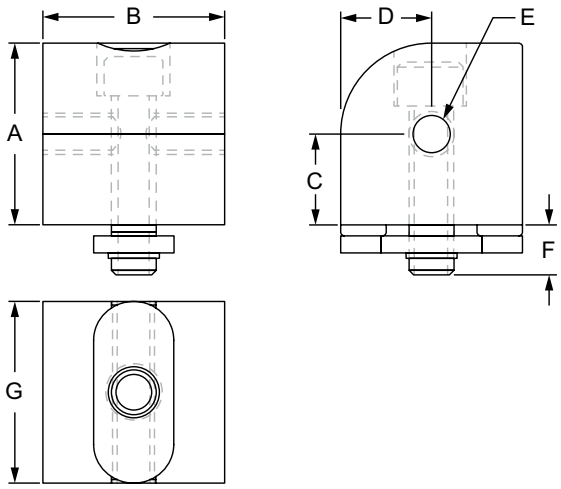

Part No.	Series	Color	A	B	C	D	E	F	G	Weight
4001	10	Clear	1.000"	1.000"	.500"	.500"	1/4	.275"	1.000"	.107 lb
4001-Black	10	Black	1.000"	1.000"	.500"	.500"	1/4	.275"	1.000"	.107 lb
4401	15	Clear	1.500"	1.500"	.750"	.750"	5/16	.450"	1.500"	.344 lb
4401-Black	15	Black	1.500"	1.500"	.750"	.750"	5/16	.450"	1.500"	.344 lb

Material Specifications

Material	Alloy	Process	Finish
Aluminum	6005A – T61	Milled	Anodize

Included Hardware (Mount Nub to T-Slot)

Part No.	Series	Qty.	Bolt	T-Nut
3306	10	1	1/4-20 x 1" SHCS	Economy
3613	15	1	5/16-18 x 1.5" SHCS	Economy

Suggested Hardware (Mount Arm to Nub)

Part No.	Series	Qty.	Bolt
3342	10	2	1/4-20 x 1/2" FBHSCS
3330	15	2	5/16-18 x 11/16" FBHSCS

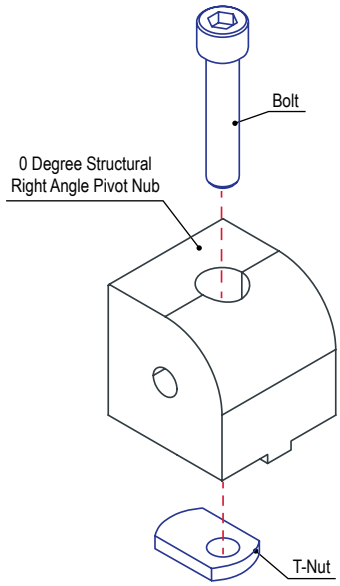

External Fasteners

90 Degree Structural Right Angle Pivot Nub

- No machining required
- Perpendicular to mounting profile
- Creates structural pivot ranging from 0-180 degrees
- Slot tab helps prevent rotation, assists in alignment with T-slot

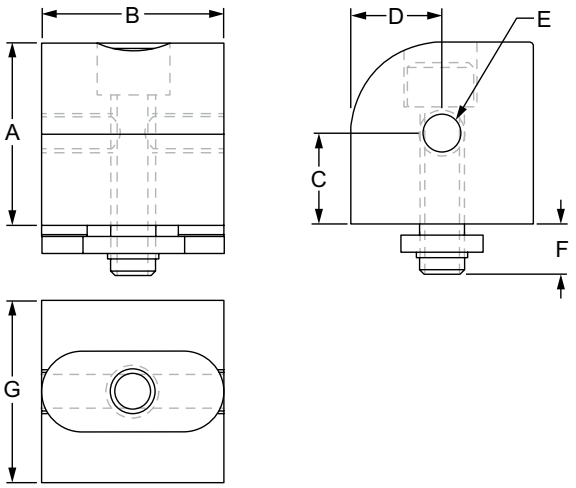

Part No.	Series	Color	A	B	C	D	E	F	G	Weight
4002	10	Clear	1.000"	1.000"	.500"	.500"	1/4	.275"	1.000"	.106 lb
4002-Black	10	Black	1.000"	1.000"	.500"	.500"	1/4	.275"	1.000"	.107 lb
4402	15	Clear	1.500"	1.500"	.750"	.750"	5/16	.450"	1.500"	.338 lb
4402-Black	15	Black	1.500"	1.500"	.750"	.750"	5/16	.450"	1.500"	.338 lb

Material Specifications

Material	Alloy	Process	Finish
Aluminum	6005A – T61	Milled	Anodize

Included Hardware (Mount Nub to T-Slot)

Part No.	Series	Qty.	Bolt	T-Nut
3306	10	1	1/4-20 x 1" SHCS	Economy
3613	15	1	5/16-18 x 1.5" SHCS	Economy

Suggested Hardware (Mount Arm to Nub)

Part No.	Series	Qty.	Bolt
3342	10	2	1/4-20 x 1/2" FBHSCS
3330	15	2	5/16-18 x 11/16" FBHSCS

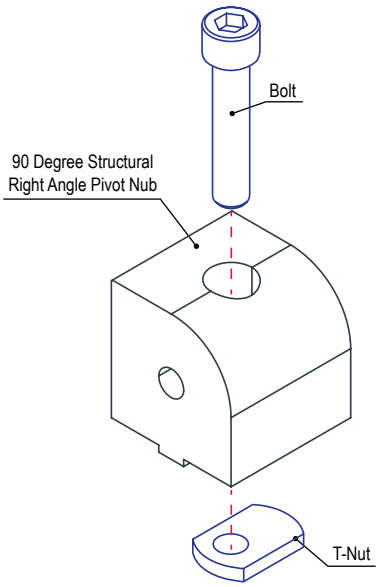

80/20 BUILD YOUR IDEA
More on 80/20® products available at 8020.net

Universal Structural Right Angle Pivot Nub

- No machining required
- Reconfigurable, reusable
- Creates structural pivot ranging from 0-180 degrees
- Parallel or perpendicular to mounting profile

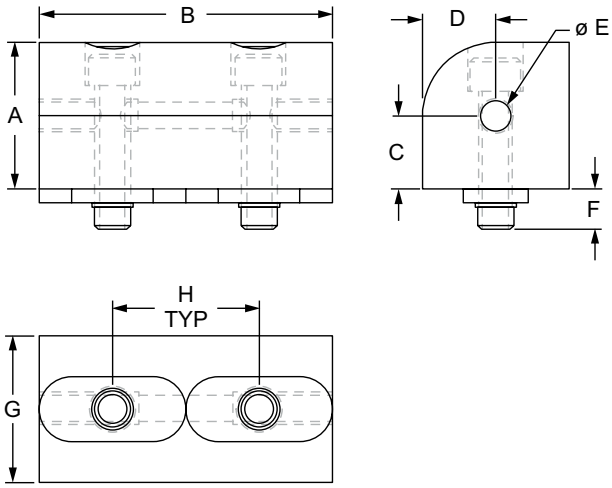

Part No.	Series	Color	A	B	C	D	E	F	G	H	Weight
4003	10	Clear	1.000"	2.000"	.500"	.500"	1/4	.275"	1.000"	1.000"	.214 lb
4003-Black	10	Black	1.000"	2.000"	.500"	.500"	1/4	.275"	1.000"	1.000"	.214 lb
4403	15	Clear	1.500"	3.000"	.750"	.750"	5/16	.450"	1.500"	1.500"	.685 lb
4403-Black	15	Black	1.500"	3.000"	.750"	.750"	5/16	.450"	1.500"	1.500"	.685 lb

Material Specifications

Material	Alloy	Process	Finish
Aluminum	6005A – T61	Milled	Anodize

Included Hardware (Mount Nub to T-Slot)

Part No.	Series	Qty.	Bolt	T-Nut
3306	10	2	1/4-20 x 1" SHCS	Economy
3613	15	2	5/16-18 x 1.5" SHCS	Economy

Suggested Hardware (Mount Arm to Nub)

Part No.	Series	Qty.	Bolt
3342	10	2	1/4-20 x 1/2" FBHSCS
3330	15	2	5/16-18 x 11/16" FBHSCS

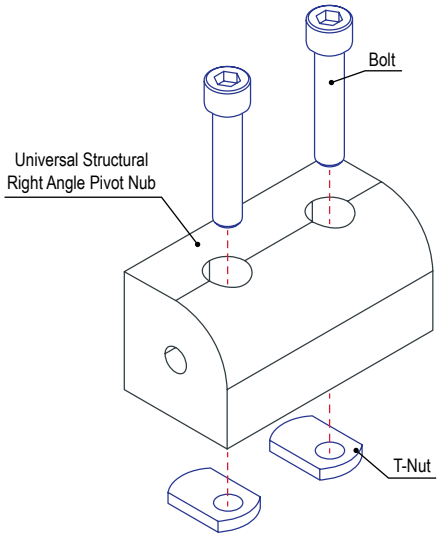

External Fasteners

"L" Structural Pivot Arm

- No machining required
- Reconfigurable, reusable
- Creates structural angle on a perpendicular axis
- Pre-load to simplify assembly

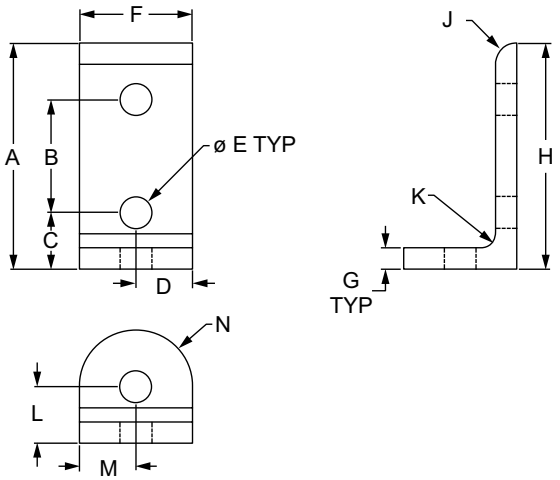

Part No.	Series	Color	A	B	C	D	E	F	G	H	J	K	L	M	N	Weight
4149	10	Clear	2.000"	1.000"	.500"	.500"	.281"	1.000"	.188"	2.000"	.188"	.125"	.500"	.500"	.505"	.044 lb
4149-Black	10	Black	2.000"	1.000"	.500"	.500"	.281"	1.000"	.188"	2.000"	.188"	.125"	.500"	.500"	.505"	.044 lb
4349	15	Clear	3.000"	1.500"	.750"	.750"	.328"	1.500"	.250"	3.000"	.250"	.312"	.750"	.750"	.755"	.142 lb
4349-Black	15	Black	3.000"	1.500"	.750"	.750"	.328"	1.500"	.250"	3.000"	.250"	.312"	.750"	.750"	.755"	.142 lb
25-4149	25	Clear	50.00mm	25.00mm	12.50mm	12.50mm	6.50mm	25.00mm	4.00mm	50.00mm	4.00mm	3.00mm	12.50mm	12.50mm	12.50mm	.0075 kg
25-4149-Black	25	Black	50.00mm	25.00mm	12.50mm	12.50mm	6.50mm	25.00mm	4.00mm	50.00mm	4.00mm	3.00mm	12.50mm	12.50mm	12.50mm	.0075 kg
40-4349	40	Clear	80.00mm	40.00mm	20.00mm	20.00mm	8.30mm	40.00mm	6.00mm	80.00mm	6.00mm	8.00mm	20.00mm	20.00mm	20.00mm	.0679 kg
40-4349-Black	40	Black	80.00mm	40.00mm	20.00mm	20.00mm	8.30mm	40.00mm	6.00mm	80.00mm	6.00mm	8.00mm	20.00mm	20.00mm	20.00mm	.0679 kg

Material Specifications

Material	Alloy	Process	Finish
Aluminum	6005A – T61	Milled	Anodize

Suggested Hardware (Mount Arm to T-slot)

Part No.	Series	Qty.	Bolt	T-Nut
3393	10	3	1/4-20 x 1/2" BHSCS	Economy
3320	15	3	5/16-18 x 11/16" FBHSCS	Economy
75-3404	25	3	M6 x 10mm BHSCS	Economy
75-3422	40	3	M8 x 16mm BHSCS	Economy

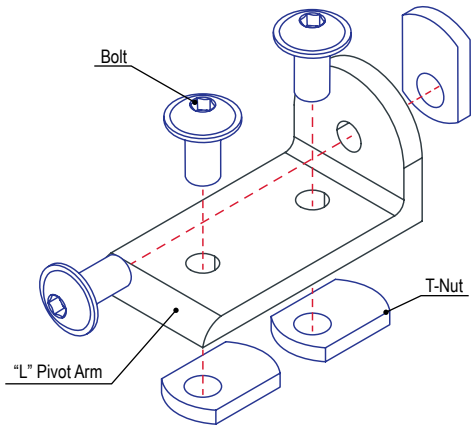

80/20 BUILD YOUR IDEA
More on 80/20® products available at 8020.net

Standard / Extended Straight Structural Pivot Arm

- No machining required
- Pre-load to simplify assembly
- Creates a structured angle connection between profiles
- Used with nub or mounted directly to T-slot

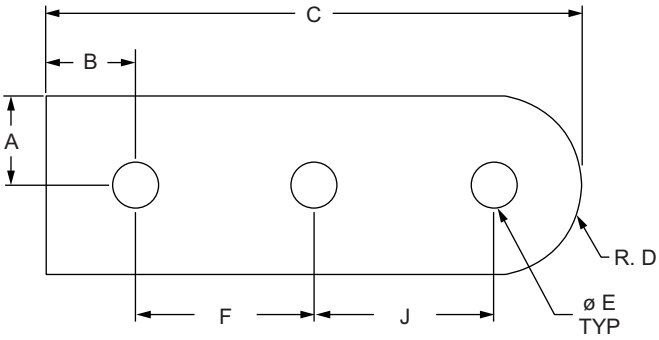

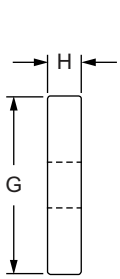

Part No.	Series	Type	Color	A	B	C	D	E	F	G	H	J	Weight
4196	10	Standard	Clear	.500"	.500"	3.000"	.505"	.257"	1.000"	1.000"	.188"	-	.051 lb
4196-Black	10		Black	.500"	.500"	3.000"	.505"	.257"	1.000"	1.000"	.188"	-	.051 lb
4199	10	Extended	Clear	.500"	.500"	3.995"	.505"	.257"	1.000"	1.000"	.250"	2.010"	.092 lb
4199-Black	10		Black	.500"	.500"	3.995"	.505"	.257"	1.000"	1.000"	.250"	2.010"	.092 lb
4396	15	Standard	Clear	.745"	.750"	4.500"	.750"	.328"	1.500"	1.490"	.250"	-	.149 lb
4396-Black	15		Black	.745"	.750"	4.500"	.750"	.328"	1.500"	1.490"	.250"	-	.149 lb
4399	15	Extended	Clear	.745"	.750"	6.000"	.750"	.328"	1.500"	1.490"	.250"	3.000"	.203 lb
4399-Black	15		Black	.745"	.750"	6.000"	.750"	.328"	1.500"	1.490"	.250"	3.000"	.203 lb
25-4196	25	Standard	Clear	12.50mm	12.50mm	75.00mm	12.50mm	6.30mm	25.00mm	25.00mm	4.00mm	-	.0082 kg
25-4196-Black	25		Black	12.50mm	12.50mm	75.00mm	12.50mm	6.30mm	25.00mm	25.00mm	4.00mm	-	.0082 kg
25-4199	25	Extended	Clear	12.50mm	12.50mm	100.00mm	12.50mm	6.30mm	25.00mm	25.00mm	6.00mm	50.00mm	.0400 kg
25-4199-Black	25		Black	12.50mm	12.50mm	100.00mm	12.50mm	6.30mm	25.00mm	25.00mm	6.00mm	50.00mm	.0400 kg
40-4396	40	Standard	Clear	19.90mm	20.00mm	119.90mm	19.90mm	8.30mm	40.00mm	39.80mm	6.00mm	-	.0705 kg
40-4396-Black	40		Black	19.90mm	20.00mm	119.90mm	19.90mm	8.30mm	40.00mm	39.80mm	6.00mm	-	.0705 kg
40-4399	40	Extended	Clear	19.90mm	20.00mm	160.00mm	20.00mm	8.30mm	40.00mm	39.80mm	6.00mm	80.00mm	.0958 kg
40-4399-Black	40		Black	19.90mm	20.00mm	160.00mm	20.00mm	8.30mm	40.00mm	39.80mm	6.00mm	80.00mm	.0958 kg

Material Specifications

Material	Alloy	Process	Finish
Aluminum	6005A – T61	Milled	Anodize

Suggested Hardware (Mount Arm to T-slot)

Part No.	Series	Qty.	Bolt	T-Nut
3321	10	3	1/4-20 x 1/2" FBHSCS	Economy
3320	15	3	5/16-18 x 11/16" FBHSCS	Economy
75-3404	25	3	M6 x 10mm BHSCS	Economy
75-3422	40	3	M8 x 16mm BHSCS	Economy

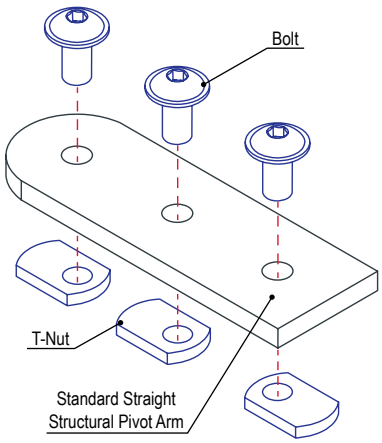

External Fasteners

Standard Structural Pivot Assembly with Dual Straight Arms

- Preassembled and includes hardware to connect nub to mounting profile
- Consists of 0 degree, 90 degree or universal structural pivot nub and two straight structural pivot arms

0 Degree Standard Structural Pivot

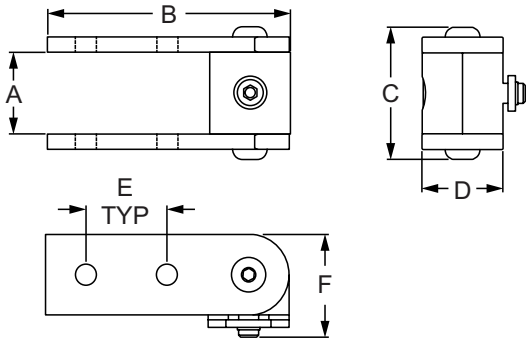

Part No.	Series	Color	Nub (Qty.)	Arm (Qty.)	A	B	C	D	E	F	Weight
4197	10	Clear	4187 (1)	4196 (2)	1.000"	3.010"	1.630"	1.000"	1.000"	1.275"	.163 lb
4197-Black	10	Black	4187 (1)	4196 (2)	1.000"	3.010"	1.630"	1.000"	1.000"	1.275"	.163 lb
4397	15	Clear	4387 (1)	4396 (2)	1.500"	4.500"	2.318"	1.500"	1.500"	1.945"	.663 lb
4397-Black	15	Black	4387 (1)	4396 (2)	1.500"	4.500"	2.318"	1.500"	1.500"	1.945"	.663 lb
25-4197	25	Clear	25-4187 (1)	25-4196 (2)	25.00mm	75.00mm	39.30mm	25.00mm	25.00mm	31.88mm	.0869 kg
25-4197-Black	25	Black	25-4187 (1)	25-4196 (2)	25.00mm	75.00mm	39.30mm	25.00mm	25.00mm	31.88mm	.0869 kg
40-4397	40	Clear	40-4387 (1)	40-4396 (2)	40.00mm	120.00mm	60.45mm	40.00mm	40.00mm	51.33mm	.3271 kg
40-4397-Black	40	Black	40-4387 (1)	40-4396 (2)	40.00mm	120.00mm	60.45mm	40.00mm	40.00mm	51.33mm	.3271 kg

90 Degree Standard Structural Pivot

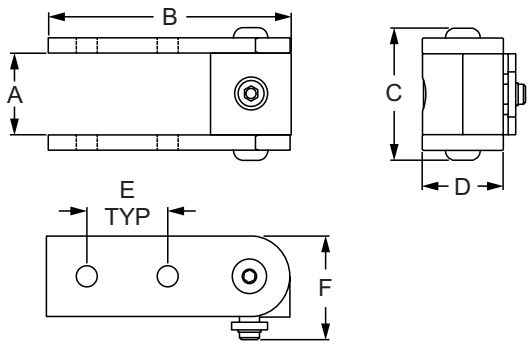

Part No.	Series	Color	Nub (Qty.)	Arm (Qty.)	A	B	C	D	E	F	Weight
4198	10	Clear	4188 (1)	4196 (2)	1.000"	3.010"	1.630"	1.000"	1.000"	1.275"	.164 lb
4198-Black	10	Black	4188 (1)	4196 (2)	1.000"	3.010"	1.630"	1.000"	1.000"	1.275"	.164 lb
4398	15	Clear	4388 (1)	4396 (2)	1.500"	4.500"	2.318"	1.500"	1.500"	1.945"	.476 lb
4398-Black	15	Black	4388 (1)	4396 (2)	1.500"	4.500"	2.318"	1.500"	1.500"	1.945"	.476 lb
25-4198	25	Clear	25-4188 (1)	25-4196 (2)	25.00mm	75.00mm	39.30mm	25.00mm	25.00mm	31.88mm	.0872 kg
25-4198-Black	25	Black	25-4188 (1)	25-4196 (2)	25.00mm	75.00mm	39.30mm	25.00mm	25.00mm	31.88mm	.0872 kg
40-4398	40	Clear	40-4388 (1)	40-4396 (2)	40.00mm	120.00mm	60.45mm	40.00mm	40.00mm	51.33mm	.2968 kg
40-4398-Black	40	Black	40-4388 (1)	40-4396 (2)	40.00mm	120.00mm	60.45mm	40.00mm	40.00mm	51.33mm	.2968 kg

80/20 BUILD YOUR IDEA
More on 80/20® products available at 8020.net

Standard Structural Pivot Assembly with Dual Straight Arms (Continued)

Universal Standard Structural Pivot

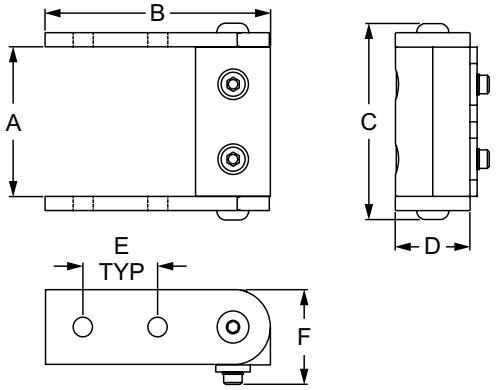

Part No.	Series	Color	Nub (Qty.)	Arm (Qty.)	A	B	C	D	E	F	Weight
4195	10	Clear	4186 (1)	4196 (2)	2.000"	3.010"	2.630"	1.275"	1.000"	1.275"	.288 lb
4195-Black	10	Black	4186 (1)	4196 (2)	2.000"	3.010"	2.630"	1.275"	1.000"	1.275"	.288 lb
4395	15	Clear	4386 (1)	4396 (2)	3.000"	4.500"	3.313"	1.945"	1.500"	1.945"	1.118 lb
4395-Black	15	Black	4386 (1)	4396 (2)	3.000"	4.500"	3.313"	1.945"	1.500"	1.945"	1.118 lb
25-4195	25	Clear	25-4186 (1)	25-4196 (2)	50.00mm	75.00mm	64.30mm	31.88mm	25.00mm	31.88mm	.1298 kg
25-4195-Black	25	Black	25-4186 (1)	25-4196 (2)	50.00mm	75.00mm	64.30mm	31.88mm	25.00mm	31.88mm	.1298 kg
40-4395	40	Clear	40-4386 (1)	40-4396 (2)	80.00mm	120.00mm	85.45mm	51.33mm	40.00mm	51.33mm	.3479 kg
40-4395-Black	40	Black	40-4386 (1)	40-4396 (2)	80.00mm	120.00mm	85.45mm	51.33mm	40.00mm	51.33mm	.3479 kg

Material Specifications

Material	Alloy	Process	Finish
Aluminum	6005A – T61	Milled	Anodize

Included Hardware (Mount Arm to Nub)

Part No.	Series	Qty.	Bolt	T-Nut
3342	10	2	1/4-20 x 1/2" FBHSCS	—
3330	15	2	5/16-18 x 5/8" FBHSCS	—
13-6312	25	2	M6 x 12mm BHSCS	—
13-8316	40	2	M8 x 16mm BHSCS	—

Included Hardware (Mount Nub to T-Slot)

Part No.	Series	Qty.	Bolt	T-Nut
3306	10	1 or 2	1/4-20 x 1" SHCS	Economy
3613	15	1 or 2	5/16-18 x 1.5" SHCS	Economy
75-3415	25	1 or 2	M6 x 25mm SHCS	Economy
75-3479	40	1 or 2	M8 x 40mm SHCS	Economy

Suggested Hardware (Mount Arm to T-Slot)

Part No.	Series	Qty.	Bolt	T-Nut
3393	10	4	1/4-20 x 1/2" BHSCS	Economy
3320	15	4	5/16-18 x 11/16" FBHSCS	Economy
75-3404	25	4	M6 x 10mm BHSCS	Economy
75-3422	40	4	M8 x 16mm BHSCS	Economy

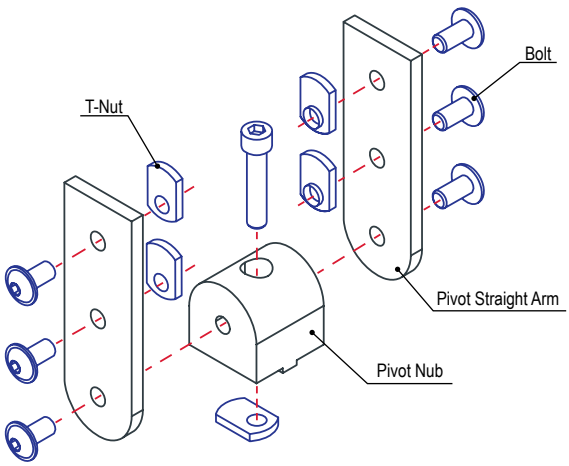

External Fasteners

Standard Structural Pivot Assembly with Dual "L" Arms

- Preassembled and includes hardware to connect nub to mounting profile
- Consists of 0 degree, 90 degree or universal structural pivot nub and two "L" structural pivot arms

0 Degree Standard Structural Pivot

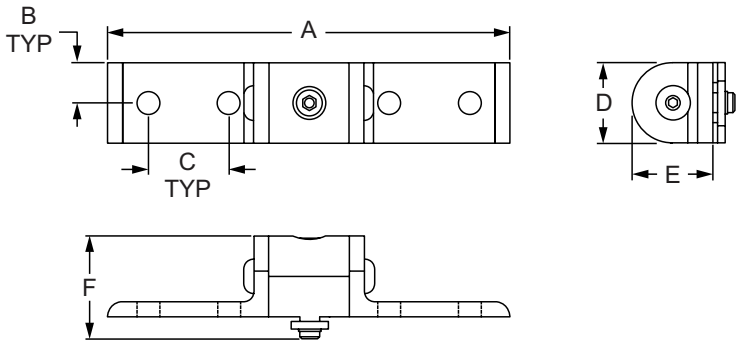

Part No.	Series	Color	Nub (Qty.)	Arm (Qty.)	A	B	C	D	E	F	Weight
4153	10	Clear	4187 (1)	4149 (2)	5.000"	.500"	1.000"	1.000"	1.000"	1.275"	.208 lb
4153-Black	10	Black	4187 (1)	4149 (2)	5.000"	.500"	1.000"	1.000"	1.000"	1.275"	.208 lb
4353	15	Clear	4387 (1)	4349 (2)	7.500"	.750"	1.500"	1.500"	1.500"	1.945"	.651 lb
4353-Black	15	Black	4387 (1)	4349 (2)	7.500"	.750"	1.500"	1.500"	1.500"	1.945"	.651 lb
25-4153	25	Clear	25-4187 (1)	25-4149 (2)	125.00mm	12.50mm	25.00mm	25.00mm	25.00mm	31.88mm	.0843 kg
25-4153-Black	25	Black	25-4187 (1)	25-4149 (2)	125.00mm	12.50mm	25.00mm	25.00mm	25.00mm	31.88mm	.0843 kg
40-4353	40	Clear	40-4387 (1)	40-4349 (2)	200.00mm	20.00mm	40.00mm	40.00mm	40.00mm	51.33mm	.3221 kg
40-4353-Black	40	Black	40-4387 (1)	40-4349 (2)	200.00mm	20.00mm	40.00mm	40.00mm	40.00mm	51.33mm	.3221 kg

90 Degree Standard Structural Pivot

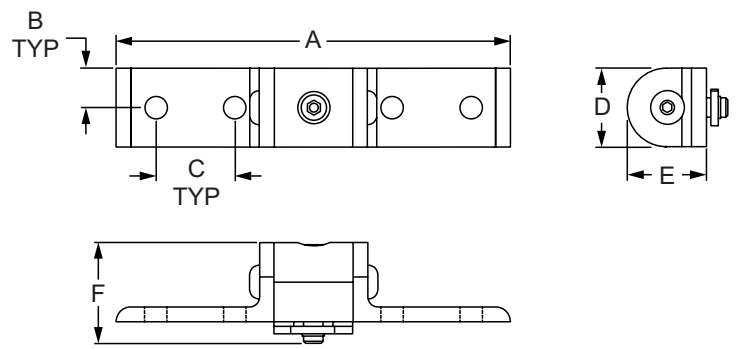

Part No.	Series	Color	Nub (Qty.)	Arm (Qty.)	A	B	C	D	E	F	Weight
4154	10	Clear	4188 (1)	4149 (2)	5.000"	.500"	1.000"	1.000"	1.000"	1.275"	.209 lb
4154-Black	10	Black	4188 (1)	4149 (2)	5.000"	.500"	1.000"	1.000"	1.000"	1.275"	.209 lb
4354	15	Clear	4388 (1)	4349 (2)	7.500"	.750"	1.500"	1.500"	1.500"	1.945"	.654 lb
4354-Black	15	Black	4388 (1)	4349 (2)	7.500"	.750"	1.500"	1.500"	1.500"	1.945"	.654 lb
25-4154	25	Clear	25-4188 (1)	25-4149 (2)	125.00mm	12.50mm	25.00mm	25.00mm	25.00mm	31.88mm	.0843 kg
25-4154-Black	25	Black	25-4188 (1)	25-4149 (2)	125.00mm	12.50mm	25.00mm	25.00mm	25.00mm	31.88mm	.0843 kg
40-4354	40	Clear	40-4388 (1)	40-4349 (2)	200.00mm	20.00mm	40.00mm	40.00mm	40.00mm	51.33mm	.3212 kg
40-4354-Black	40	Black	40-4388 (1)	40-4349 (2)	200.00mm	20.00mm	40.00mm	40.00mm	40.00mm	51.33mm	.3212 kg

80/20 BUILD YOUR IDEA
More on 80/20® products available at 8020.net

Standard Structural Pivot Assembly with Dual "L" Arms (Continued)

Universal Standard Structural Pivot

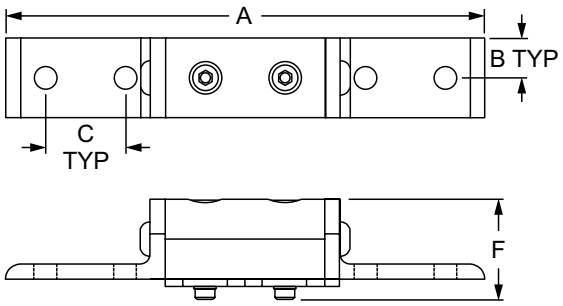

Part No.	Series	Color	Nub (Qty.)	Arm (Qty.)	A	B	C	D	E	F	Weight
4156	10	Clear	4186 (1)	4149 (2)	6.000"	.500"	1.000"	1.000"	1.000"	1.275"	.311 lb
4156-Black	10	Black	4186 (1)	4149 (2)	6.000"	.500"	1.000"	1.000"	1.000"	1.275"	.311 lb
4356	15	Clear	4386 (1)	4349 (2)	9.000"	.750"	1.500"	1.500"	1.500"	1.945"	.972 lb
4356-Black	15	Black	4386 (1)	4349 (2)	9.000"	.750"	1.500"	1.500"	1.500"	1.945"	.972 lb
25-4156	25	Clear	25-4186 (1)	25-4149 (2)	150.00mm	12.50mm	25.00mm	25.00mm	25.00mm	31.88mm	.1268 kg
25-4156-Black	25	Black	25-4186 (1)	25-4149 (2)	150.00mm	12.50mm	25.00mm	25.00mm	25.00mm	31.88mm	.1268 kg
40-4356	40	Clear	40-4386 (1)	40-4349 (2)	240.00mm	20.00mm	40.00mm	40.00mm	40.00mm	51.33mm	.4938 kg
40-4356-Black	40	Black	40-4386 (1)	40-4349 (2)	240.00mm	20.00mm	40.00mm	40.00mm	40.00mm	51.33mm	.4938 kg

Material Specifications

Material	Alloy	Process	Finish
Aluminum	6005A – T61	Milled	Anodize

Included Hardware (Mount Arm to Nub)

Part No.	Series	Qty.	Bolt	T-Nut
3342	10	2	1/4-20 x 1/2" FBHSCS	—
3330	15	2	5/16-18 x 5/8" FBHSCS	—
13-6312	25	2	M6 x 12mm BHSCS	—
13-8316	40	2	M8 x 16mm BHSCS	—

Included Hardware (Mount Nub to T-Slot)

Part No.	Series	Qty.	Bolt	T-Nut
3306	10	1 or 2	1/4-20 x 1" SHCS	Economy
3613	15	1 or 2	5/16-18 x 1.5" SHCS	Economy
75-3415	25	1 or 2	M6 x 25mm SHCS	Economy
75-3479	40	1 or 2	M8 x 40mm SHCS	Economy

Suggested Hardware (Mount Arm to T-Slot)

Part No.	Series	Qty.	Bolt	T-Nut
3393	10	4	1/4-20 x 1/2" BHSCS	Economy
3320	15	4	5/16-18 x 11/16" FBHSCS	Economy
75-3404	25	4	M6 x 10mm BHSCS	Economy
75-3422	40	4	M8 x 16mm BHSCS	Economy

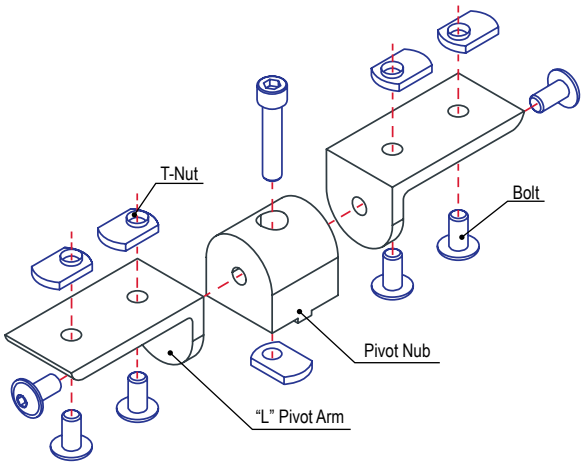

External Fasteners

Standard Structural Pivot Assembly with Straight and "L" Arm

- Preassembled and includes hardware to connect nub to mounting profile
- Consists of 0 degree, 90 degree or universal structural pivot nub; one standard and one "L" structural pivot arm

0 Degree Standard Structural Pivot

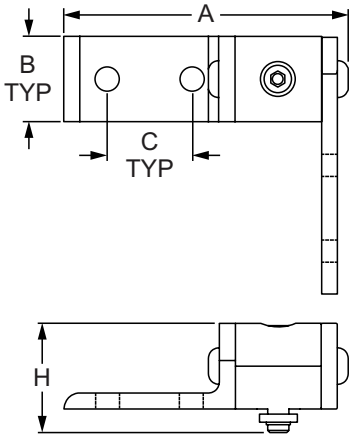

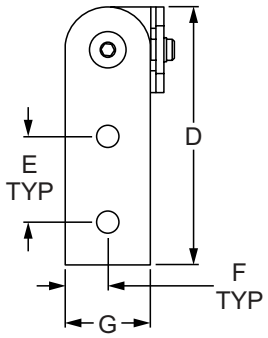

Part No.	Series	Color	Nub (Qty.)	Arm (Qty.)	A	B	C	D	E	F	G	H	Weight
4157	10	Clear	4187 (1)	4196 (1), 4149 (1)	3.315"	.500"	1.000"	3.010"	1.000"	.500"	1.000"	1.275"	.164 lb
4157-Black	10	Black	4187 (1)	4196 (1), 4149 (1)	3.315"	.500"	1.000"	3.010"	1.000"	.500"	1.000"	1.275"	.164 lb
4357	15	Clear	4387 (1)	4396 (1), 4349 (1)	4.909"	.750"	1.500"	4.500"	1.500"	.745"	1.495"	1.900"	.507 lb
4357-Black	15	Black	4387 (1)	4396 (1), 4349 (1)	4.909"	.750"	1.500"	4.500"	1.500"	.745"	1.495"	1.900"	.507 lb

90 Degree Standard Structural Pivot

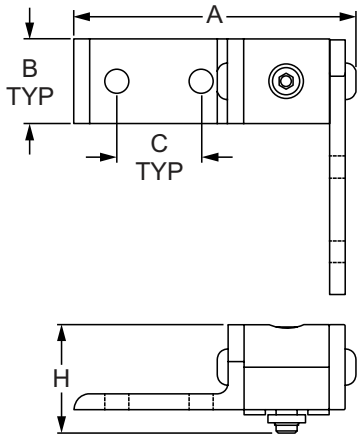

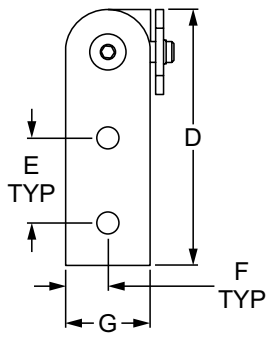

Part No.	Series	Color	Nub (Qty.)	Arm (Qty.)	A	B	C	D	E	F	G	H	Weight
4158	10	Clear	4188 (1)	4196 (1), 4149 (1)	3.315"	.500"	1.000"	3.010"	1.000"	.500"	1.000"	1.275"	.163 lb
4158-Black	10	Black	4188 (1)	4196 (1), 4149 (1)	3.315"	.500"	1.000"	3.010"	1.000"	.500"	1.000"	1.275"	.163 lb
4358	15	Clear	4388 (1)	4396 (1), 4349 (1)	6.409"	.750"	1.500"	4.500"	1.500"	.745"	1.495"	1.900"	.505 lb
4358-Black	15	Black	4388 (1)	4396 (1), 4349 (1)	6.409"	.750"	1.500"	4.500"	1.500"	.745"	1.495"	1.900"	.505 lb

80/20 BUILD YOUR IDEA
More on 80/20® products available at 8020.net

Standard Structural Pivot Assembly with Straight and "L" Arm (Continued)

Universal Standard Structural Pivot

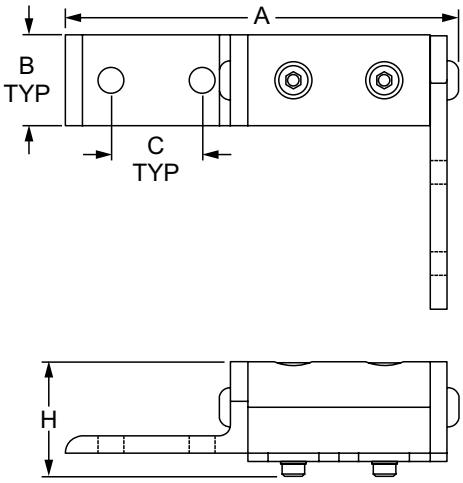

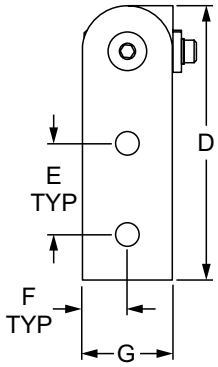

Part No.	Series	Color	Nub (Qty.)	Arm (Qty.)	A	B	C	D	E	F	G	H	Weight
4159	10	Clear	4186 (1)	4196 (1), 4149 (1)	4.315"	.500"	1.000"	3.010"	1.000"	.500"	1.000"	1.257"	.317 lb
4159-Black	10	Black	4186 (1)	4196 (1), 4149 (1)	4.315"	.500"	1.000"	3.010"	1.000"	.500"	1.000"	1.257"	.317 lb
4359	15	Clear	4386 (1)	4396 (1), 4349 (1)	6.409"	.750"	1.500"	4.500"	1.500"	.745"	1.495"	1.900"	.986 lb
4359-Black	15	Black	4386 (1)	4396 (1), 4349 (1)	6.409"	.750"	1.500"	4.500"	1.500"	.745"	1.495"	1.900"	.986 lb

Material Specifications

Material	Alloy	Process	Finish
Aluminum	6005A – T61	Milled	Anodize

Included Hardware (Mount Arm to Nub)

Part No.	Series	Qty.	Bolt	T-Nut
3342	10	2	1/4-20 x 1/2" FBHSCS	—
3330	15	2	5/16-18 x 5/8" FBHSCS	—

Included Hardware (Mount Nub to T-Slot)

Part No.	Series	Qty.	Bolt	T-Nut
3306	10	1 or 2	1/4-20 x 1" SHCS	Economy
3613	15	1 or 2	5/16-18 x 1.5" SHCS	Economy

Suggested Hardware (Mount Arm to T-Slot)

Part No.	Series	Qty.	Bolt	T-Nut
3393	10	4	1/4-20 x 1/2" BHSCS	Economy
3320	15	4	5/16-18 x 11/16" FBHSCS	Economy

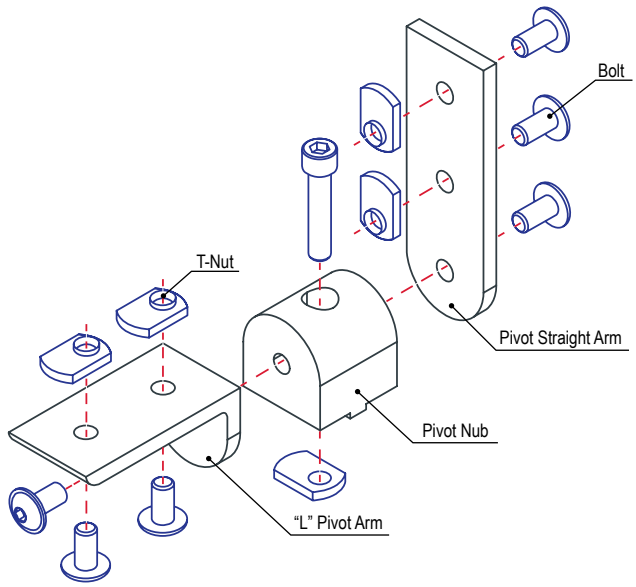

External Fasteners

Right Angle Structural Pivot Assembly with Dual Straight Arms

- Preassembled and includes hardware to connect nub to mounting profile
- Consists of 0 degree, 90 degree or universal structural right angle pivot nub; two straight structural pivot arms

0 Degree Right Angle Structural Pivot

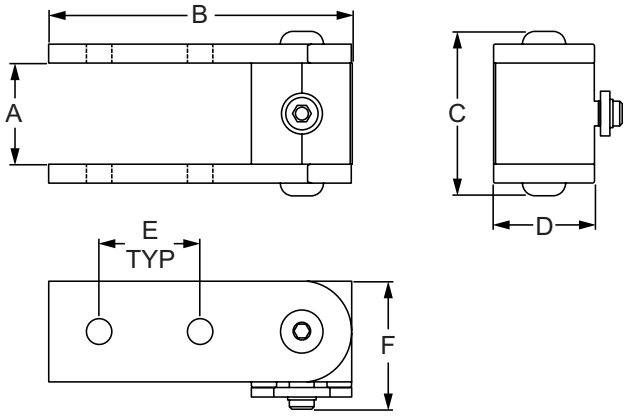

Part No.	Series	Color	Nub (Qty.)	Arm (Qty.)	A	B	C	D	E	F	Weight
4004	10	Clear	4001 (1)	4196 (2)	1.000"	3.010"	1.630"	1.000"	1.000"	1.275"	.226 lb
4004-Black	10	Black	4001 (1)	4196 (2)	1.000"	3.010"	1.630"	1.000"	1.000"	1.275"	.226 lb
4404	15	Clear	4401 (1)	4396 (2)	1.500"	4.500"	2.318"	1.500"	1.500"	1.950"	.683 lb
4404-Black	15	Black	4401 (1)	4396 (2)	1.500"	4.500"	2.318"	1.500"	1.500"	1.950"	.683 lb

90 Degree Right Angle Structural Pivot

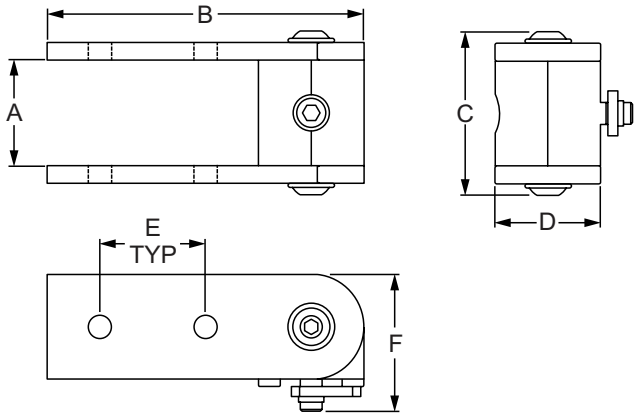

Part No.	Series	Color	Nub (Qty.)	Arm (Qty.)	A	B	C	D	E	F	Weight
4005	10	Clear	4002 (1)	4196 (2)	1.000"	3.010"	1.630"	1.000"	1.000"	1.275"	.225 lb
4005-Black	10	Black	4002 (1)	4196 (2)	1.000"	3.010"	1.630"	1.000"	1.000"	1.275"	.225 lb
4405	15	Clear	4402 (1)	4396 (2)	1.500"	4.500"	2.318"	1.500"	1.500"	1.945"	.688 lb
4405-Black	15	Black	4402 (1)	4396 (2)	1.500"	4.500"	2.318"	1.500"	1.500"	1.945"	.688 lb

80/20 BUILD YOUR IDEA
More on 80/20® products available at 8020.net

Right Angle Structural Pivot Assembly with Dual Straight Arms (Continued)

Universal Right Angle Structural Pivot

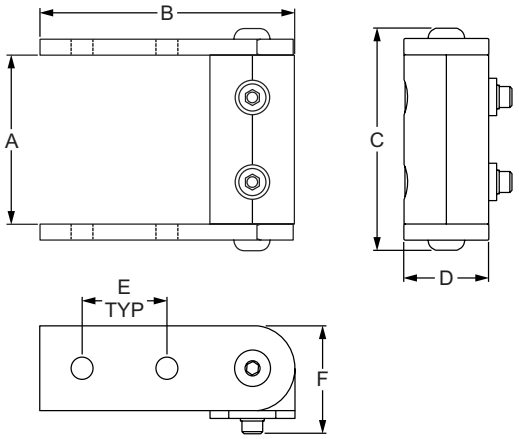

Part No.	Series	Color	Nub (Qty.)	Arm (Qty.)	A	B	C	D	E	F	Weight
4006	10	Clear	4003 (1)	4196 (2)	2.000"	3.010"	2.630"	1.000"	1.000"	1.280"	.322 lb
4006-Black	10	Black	4003 (1)	4196 (2)	2.000"	3.010"	2.630"	1.000"	1.000"	1.280"	.322 lb
4406	15	Clear	4403 (1)	4396 (2)	3.000"	4.500"	3.818"	1.500"	1.500"	1.945"	1.002 lb
4406-Black	15	Black	4403 (1)	4396 (2)	3.000"	4.500"	3.818"	1.500"	1.500"	1.945"	1.002 lb

Material Specifications

Material	Alloy	Process	Finish
Aluminum	6005A – T61	Milled	Anodize

Included Hardware (Mount Arm to Nub)

Part No.	Series	Qty.	Bolt	T-Nut
3342	10	2	1/4-20 x 1/2" FBHSCS	—
3330	15	2	5/16-18 x 5/8" FBHSCS	—

Included Hardware (Mount Nub to T-Slot)

Part No.	Series	Qty.	Bolt	T-Nut
3306	10	1 or 2	1/4-20 x 1" SHCS	Economy
3613	15	1 or 2	5/16-18 x 1.5" SHCS	Economy

Suggested Hardware (Mount Arm to T-Slot)

Part No.	Series	Qty.	Bolt	T-Nut
3393	10	4	1/4-20 x 1/2" BHSCS	Economy
3320	15	4	5/16-18 x 11/16" FBHSCS	Economy

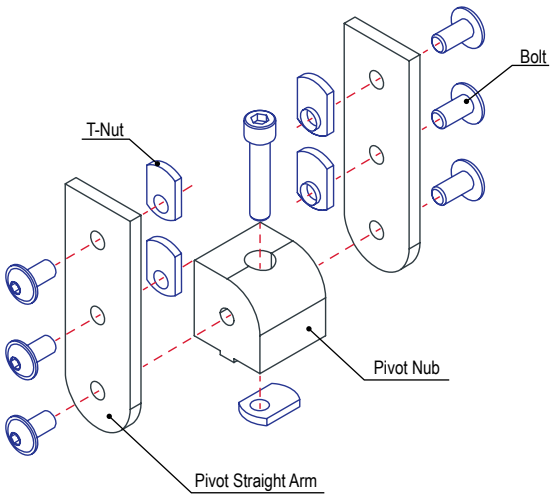

External Fasteners

Right Angle Structural Pivot Assembly with Dual "L" Arms

- Preassembled and includes hardware to connect nub to mounting profile
- Consists of 0 degree, 90 degree or universal structural right angle pivot nub; two "L" structural pivot arms

0 Degree Right Angle Structural Pivot

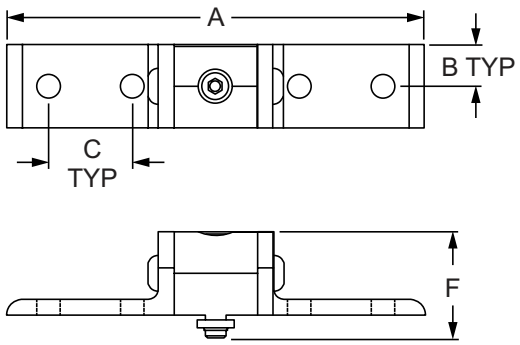

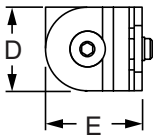

Part No.	Series	Color	Nub (Qty.)	Arm (Qty.)	A	B	C	D	E	F	Weight
4007	10	Clear	4001 (1)	4149 (2)	5.000"	.500"	1.000"	1.000"	1.000"	1.275"	.213 lb
4007-Black	10	Black	4001 (1)	4149 (2)	5.000"	.500"	1.000"	1.000"	1.000"	1.275"	.213 lb
4407	15	Clear	4401 (1)	4349 (2)	7.500"	.750"	1.500"	1.500"	1.500"	1.945"	.662 lb
4407-Black	15	Black	4401 (1)	4349 (2)	7.500"	.750"	1.500"	1.500"	1.500"	1.945"	.662 lb

90 Degree Right Angle Structural Pivot

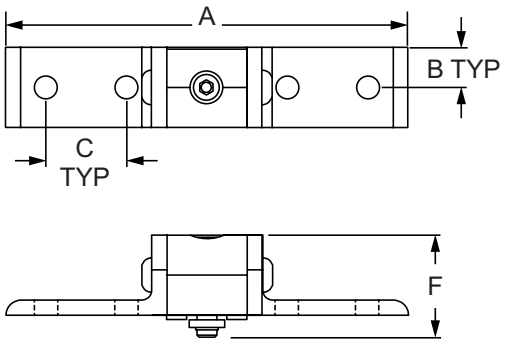

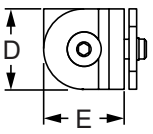

Part No.	Series	Color	Nub (Qty.)	Arm (Qty.)	A	B	C	D	E	F	Weight
4008	10	Clear	4002 (1)	4149 (2)	5.000"	.500"	1.000"	1.000"	1.000"	1.275"	.213 lb
4008-Black	10	Black	4002 (1)	4149 (2)	5.000"	.500"	1.000"	1.000"	1.000"	1.275"	.213 lb
4408	15	Clear	4402 (1)	4349 (2)	7.500"	.750"	1.500"	1.500"	1.500"	1.945"	.657 lb
4408-Black	15	Black	4402 (1)	4349 (2)	7.500"	.750"	1.500"	1.500"	1.500"	1.945"	.657 lb

80/20 BUILD YOUR IDEA
More on 80/20® products available at 8020.net

Right Angle Structural Pivot Assembly with Dual "L" Arms (Continued)

Universal Right Angle Structural Pivot

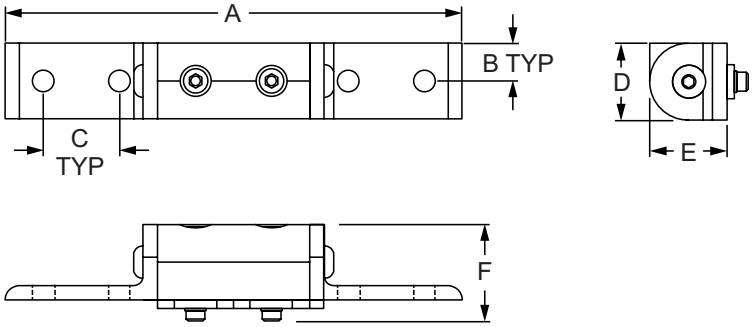

Part No.	Series	Color	Nub (Qty.)	Arm (Qty.)	A	B	C	D	E	F	Weight
4009	10	Clear	4003 (1)	4149 (2)	6.000"	.500"	1.000"	1.000"	1.000"	1.275"	.319 lb
4009-Black	10	Black	4003 (1)	4149 (2)	6.000"	.500"	1.000"	1.000"	1.000"	1.275"	.319 lb
4409	15	Clear	4403 (1)	4349 (2)	9.000"	.750"	1.500"	1.500"	1.500"	1.945"	1.013 lb
4409-Black	15	Black	4403 (1)	4349 (2)	9.000"	.750"	1.500"	1.500"	1.500"	1.945"	1.013 lb

Material Specifications

Material	Alloy	Process	Finish
Aluminum	6005A – T61	Milled	Anodize

Included Hardware (Mount Arm to Nub)

Part No.	Series	Qty.	Bolt	T-Nut
3342	10	2	1/4-20 x 1/2" FBHSCS	—
3330	15	2	5/16-18 x 5/8" FBHSCS	—

Included Hardware (Mount Nub to T-Slot)

Part No.	Series	Qty.	Bolt	T-Nut
3306	10	1 or 2	1/4-20 x 1" SHCS	Economy
3613	15	1 or 2	5/16-18 x 1.5" SHCS	Economy

Suggested Hardware (Mount Arm to T-Slot)

Part No.	Series	Qty.	Bolt	T-Nut
3393	10	4	1/4-20 x 1/2" BHSCS	Economy
3320	15	4	5/16-18 x 11/16" FBHSCS	Economy

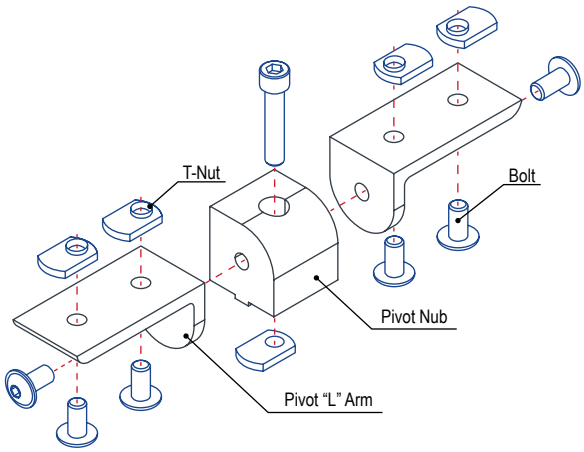

Hardware

Slide-In Economy T-Nut - Centered Thread

- Loads from profile end
- Two styles
- Position pilot projection down in the T-slot
- Available in double (pg. 3-156) or triple (pg. 3-157), excluding stainless steel

Style #1

Style #2

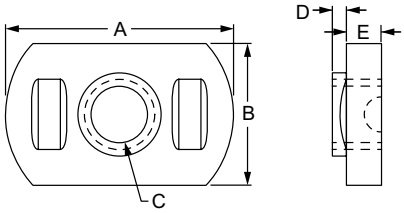

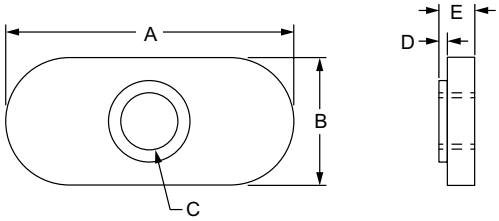

Part No.	Series	Style	Material	Grade	Finish	A	B	C (Thread)	D	E	Weight
3275	10	Style 2	Steel	1010	Black Zinc	.875"	.443"	8-32	.030"	.124"	.008 lb
3276	10	Style 2	Steel	1010	Black Zinc	.875"	.443"	10-32	.030"	.124"	.008 lb
3675	10	Style 2	Stainless-Steel	18-8	Stainless	1.000"	.443"	1/4-20	.030"	.124"	.010 lb
3382	10	Style 2	Steel	1010	Black Zinc	1.000"	.443"	1/4-20	.030"	.124"	.009 lb
3785	10	Style 2	Steel	1010	Bright Zinc	1.000"	.443"	1/4-20	.030"	.124"	.010 lb
3859	10	Style 2	Steel	1010	Bright Zinc	1.000"	.443"	M6 x 1.0	.030"	.124"	.010 lb
3686	15	Style 1	Stainless-Steel	304 Stainless	Stainless	.812"	.505"	1/4-20	.050"	.125"	.013 lb
3286	15	Style 1	Steel	1010	Black Zinc	.812"	.505"	1/4-20	.050"	.125"	.009 lb
3786	15	Style 1	Steel	1010	Bright Zinc	.812"	.505"	1/4-20	.050"	.125"	.012 lb
3789	15	Style 1	Steel	1010	Bright Zinc	.984"	.505"	5/16-18	.078"	.133"	.015 lb
3836	15	Style 2	Steel	1010	Bright Zinc	1.125"	.505"	M6 x 1.0	.050"	.130"	.018 lb
25-3382	25	Style 2	Steel	1010	Black Zinc	25.40mm	11.25mm	1/4-20	.76mm	3.15mm	.0041 kg
25-1961	25	Style 2	Steel	1010	Bright Zinc	25.40mm	11.25mm	M6 x 1.0	.76mm	3.15mm	.0041 kg
30-3789	30	Style 1	Steel	1010	Bright Zinc	25.40mm	12.60mm	5/16-18	2.00mm	3.60mm	.0068 kg
30-3796	30	Style 1	Steel	1010	Bright Zinc	25.40mm	12.60mm	M8 x 1.25	2.00mm	3.60mm	.0053 kg
40-3286	40	Style 1	Steel	1010	Black Zinc	20.62mm	12.83mm	1/4-20	1.27mm	4.45mm	.0054 kg
40-1961	40	Style 2	Steel	1010	Bright Zinc	28.58mm	12.83mm	M6 x 1.0	1.27mm	4.45mm	.0079 kg

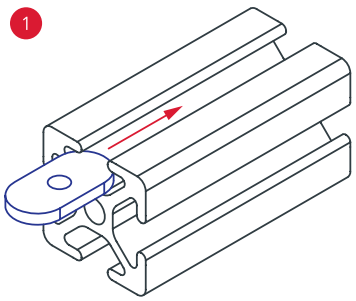

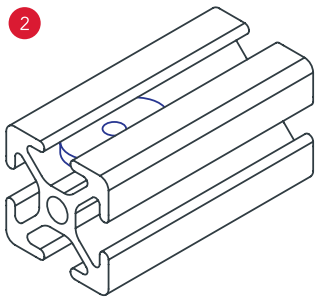

80/20 BUILD YOUR IDEA
More on 80/20® products available at 8020.net

Slide-In Economy T-Nut - Offset Thread

- Loads from profile end
- Two styles
- Position pilot projection down in the T-slot
- Available in double (pg. 3-156) or triple (pg. 3-157), excluding stainless steel

Style #1

Style #2

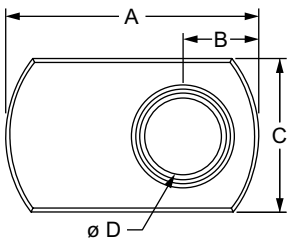

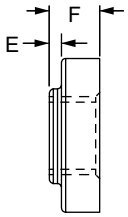

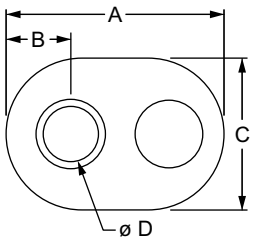

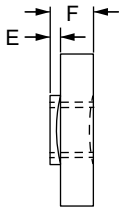

Part No.	Series	Style	Material	Grade	Finish	A	B	C	D (Thread)	E	F	Weight
3676	10	Style 1	Stainless-Steel	304 Stainless	Stainless	.625"	.187"	.380"	10-32	.030"	.124"	.005 lb
3278	15	Style 1	Steel	1010	Black Zinc	.984"	.281"	.638"	5/16-18	.080"	.222"	.020 lb
3778	15	Style 1	Steel	1010	Bright Zinc	.984"	.281"	.638"	5/16-18	.080"	.222"	.020 lb
3838	15	Style 1	Steel	1010	Bright Zinc	.984"	.281"	.638"	M8 X 1.25	.080"	.222"	.020 lb
3678	15	Style 1	Stainless-Steel	304 Stainless	Stainless	1.113"	.281"	.638"	5/16-18	.080"	.222"	.027 lb
25-1941	25	Style 2	Steel	1010	Bright Zinc	15.87mm	4.75mm	11.00mm	M4 x 0.7	.76mm	3.14mm	.0027 kg
25-1951	25	Style 2	Steel	1010	Bright Zinc	15.87mm	4.75mm	11.00mm	M5 x 0.8	.76mm	3.14mm	.0024 kg
30-1961	30	Style 1	Steel	1010	Bright Zinc	20.60mm	6.40mm	13.00mm	M6 x 1.0	1.27mm	4.44mm	.0056 kg
40-1981	40	Style 1	Steel	1010	Bright Zinc	24.99mm	7.14mm	16.19mm	M8 x 1.25	2.03mm	5.64mm	.0092 kg
40-3278	40	Style 1	Steel	1010	Black Zinc	24.99mm	7.14mm	16.19mm	5/16-18	2.03mm	5.64mm	.0090 kg

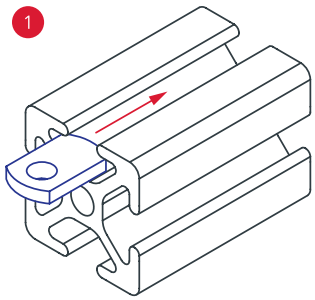

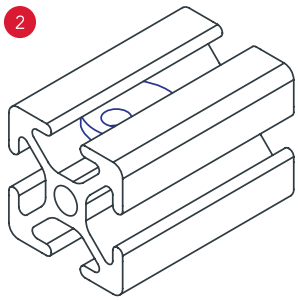

Hardware

Double Slide-In Economy T-Nut

- Loads from profile end
- Simplifies assembly process
- Position pilot projection down in the T-slot
- Available in triple (pg. 3-157)

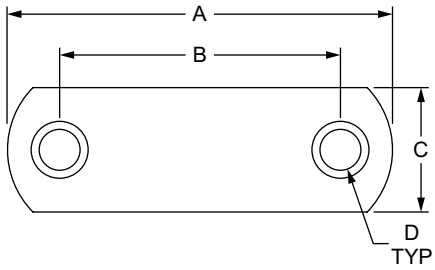

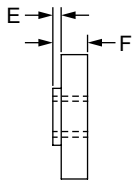

Part No.	Series	Material	Grade	Finish	A	B	C	D (Thread)	E	F	Weight
3281	10	Steel	1010	Black Zinc	1.375"	1.000"	.443"	8-32	.030"	.124"	.015 lb
3280	10			Black Zinc	1.875"	1.000"	.443"	1/4-20	.050"	.144"	.019 lb
3800	10			Bright Zinc	1.875"	1.000"	.443"	M6 x 1.0	.050"	.144"	.020 lb
3263	15			Black Zinc	2.813"	1.500"	.638"	1/4-20	.080"	.222"	.070 lb
3279	15			Black Zinc	2.813"	1.500"	.638"	5/16-18	.080"	.222"	.061 lb
3879	15			Bright Zinc	3.000"	1.500"	.638"	M8 x 1.25	.080"	.222"	.067 lb
25-1962	25			Bright Zinc	47.60mm	25.00mm	11.20mm	M6 x 1.0	1.27mm	3.68mm	.0093 kg
40-1982	40			Bright Zinc	75.00mm	40.00mm	16.20mm	M8 x 1.25	2.00mm	5.60mm	.0293 kg

1

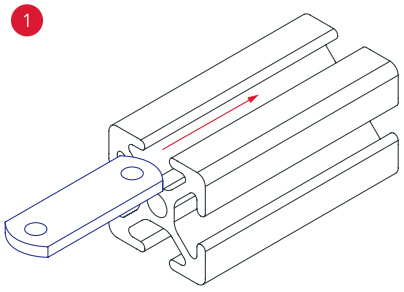

2

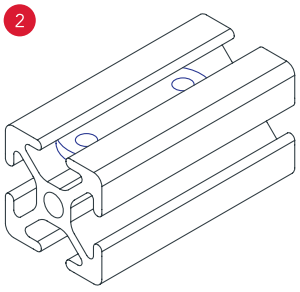

80/20 BUILD YOUR IDEA
More on 80/20® products available at 8020.net

Triple Slide-In Economy T-Nut / Economy T-Nut Holding Spring

- Loads from profile end
- Simplifies assembly process
- Position pilot projection down in the T-slot
- Available in double (pg. 3-156)

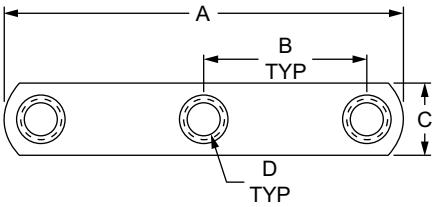

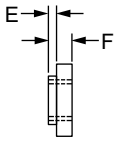

Part No.	Series	Material	Grade	Finish	A	B	C	D (Thread)	E	F	Weight
3287	10	Steel	1010	Black Zinc	2.450"	1.000"	.443"	1/4-20	.050"	.144"	.025 lb
3900	10			Bright Zinc	2.450"	1.000"	.443"	M6 x 1.0	.050"	.144"	.034 lb
3285	15			Black Zinc	3.562"	1.500"	.638"	5/16-18	.080"	.222"	.077 lb
3805	15			Bright Zinc	3.562"	1.500"	.638"	M8 x 1.25	.080"	.222"	.080 lb

Economy T-Nut Holding Spring

- Spring holds fastener in place
- Sold in packs of 100
- Snaps onto pilot projection of 15 & 40 series style 1 economy T-nut
- Also works with double (pg. 3-156) or triple (pg. 3-157)

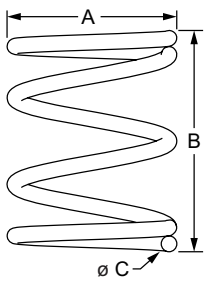

Part No.	Series	Material	Grade	A	B	C	Weight
3010	15 40	Steel	1215	.240"	.313"	.022"	.022 lb

Hardware

Standard Slide-In T-Nut

- Loads from profile end
- Customizable up to 36” (91.44cm)

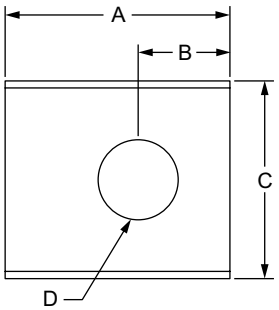

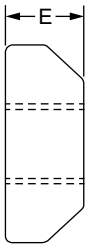

10 Series Standard Slide-In T-Nut

Part No.	Series	Type	Material	Grade	Finish	A	B	C	D (Thread)	E	Weight
3205	10	Standard T-Nut	Steel	1215	Black Zinc	.490”	.200”	.431”	10-32	.171”	.008 lb
3705	10	Standard T-Nut			Bright Zinc	.490”	.200”	.431”	10-32	.171”	.007 lb
3204	10	Standard T-Nut			Black Zinc	.490”	.200”	.431”	1/4-20	.171”	.007 lb
3206	10	Standard T-Nut			Black Zinc	.490”	.200”	.431”	M5 x 0.8	.171”	.008 lb
3871	10	Standard T-Nut			Bright Zinc	.490”	.200”	.431”	M5 x 0.8	.171”	.008 lb
3873	10	Standard T-Nut			Bright Zinc	.490”	.200”	.431”	M6 x 1.0	.171”	.007 lb
8901	10	Custom T-Nut			Mill	Per Your Drawing	Per Your Drawing	.431”	Per Your Drawing	.171”	.019 lb / in.
8901-36	10	T-Nut Profile			Mill	36.000”	Per Your Drawing	.431”	Per Your Drawing	.171”	.684 lb
8901-145	10	T-Nut Profile			Mill	145.000”	Per Your Drawing	.431”	Per Your Drawing	.171”	2.755 lb

15 Series Standard Slide-In T-Nut

Part No.	Series	Type	Material	Grade	Finish	A	B	C	D (Thread)	E	Weight
3201	15	Standard T-Nut	Steel	1215	Black Zinc	.700”	.281”	.625”	10-32	.243”	.025 lb
3202	15	Standard T-Nut			Black Zinc	.700”	.281”	.625”	1/4-20	.243”	.024 lb
3203	15	Standard T-Nut			Black Zinc	.700”	.281”	.625”	5/16-18	.243”	.022 lb
3866	15	Standard T-Nut			Bright Zinc	.700”	.281”	.625”	M6 x 1.0	.243”	.025 lb
3703	15	Standard T-Nut			Bright Zinc	.700”	.281”	.625”	5/16-18	.243”	.022 lb
3868	15	Standard T-Nut			Bright Zinc	.700”	.281”	.625”	M8 x 1.25	.243”	.022 lb
8900	15	Custom T-Nut			Mill	Per Your Drawing	Per Your Drawing	.625”	Per Your Drawing	.243”	.040 lb / in.
8900-36	15	T-Nut Profile			Mill	36.000”	Per Your Drawing	.625”	Per Your Drawing	.243”	1.440 lb
8900-145	15	T-Nut Profile			Mill	145.000”	Per Your Drawing	.625”	Per Your Drawing	.243”	5.800 lb

25 Series Standard Slide-In T-Nut

Part No.	Series	Type	Material	Grade	Finish	A	B	C	D (Thread)	E	Weight
25-3206	25	Standard T-Nut	Steel	1215	Bright Zinc	12.45mm	5.08mm	10.95mm	M5 x 0.8	4.34mm	.0036 kg
25-1954	25	Standard T-Nut			Bright Zinc	12.45mm	5.08mm	10.95mm	M5 x 0.8	4.34mm	.0041 kg
25-1964	25	Standard T-Nut			Bright Zinc	12.45mm	5.08mm	10.95mm	M6 x 1.0	4.34mm	.0036 kg
25-3204	25	Standard T-Nut			Black Zinc	12.45mm	5.08mm	10.95mm	1/4-20	4.34mm	.0032 kg
25-8901	25	Custom T-Nut			Mill	Per Your Drawing	Per Your Drawing	10.95mm	Per Your Drawing	4.34mm	.0004 kg / mm
25-8901-914	25	T-Nut Profile			Mill	914.00mm	Per Your Drawing	10.95mm	Per Your Drawing	4.34mm	.2742 kg
25-8901-3683	25	T-Nut Profile			Mill	3683.00mm	Per Your Drawing	10.95mm	Per Your Drawing	4.34mm	1.1049 kg

80/20 BUILD YOUR IDEA
More on 80/20® products available at 8020.net

Standard Slide-In T-Nut (Continued)

40 Series Standard Slide-In T-Nut

Part No.	Series	Type	Material	Grade	Finish	A	B	C	D (Thread)	E	Weight
40-1964	40	Standard T-Nut	Steel	1215	Bright Zinc	17.45mm	7.14mm	15.88mm	M6 x 1.0	6.35mm	.0113 kg
40-1984	40	Standard T-Nut			Bright Zinc	17.45mm	7.14mm	15.88mm	M8 x 1.25	6.35mm	.0100 kg
40-3202	40	Standard T-Nut			Black Zinc	17.45mm	7.14mm	15.88mm	1/4-20	6.35mm	.0109 kg
40-3203	40	Standard T-Nut			Black Zinc	17.45mm	7.14mm	15.88mm	5/16-18	6.35mm	.0104 kg
40-8900	40	Custom T-Nut			Mill	Per Your Drawing	Per Your Drawing	15.88mm	Per Your Drawing	6.35mm	.0007 kg / mm
40-8900-914	40	T-Nut Profile			Mill	914.00mm	Per Your Drawing	15.88mm	Per Your Drawing	6.35mm	.6398 kg
40-8900-3683	40	T-Nut Profile			Mill	3683.00mm	Per Your Drawing	15.88mm	Per Your Drawing	6.35mm	2.5781 kg

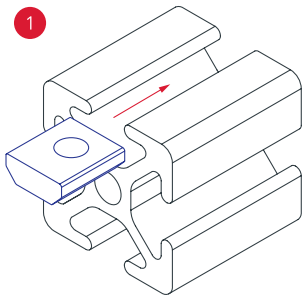

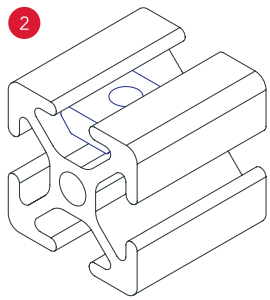

Hardware

Self-Aligning Slide-In T-Nut with Ball Spring

- Loads from profile end
- Projection aligns in the T-slot; ball spring holds the fastener in place

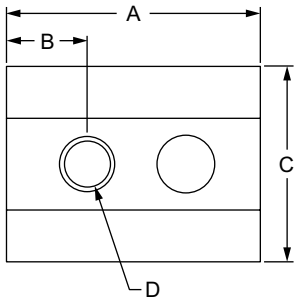

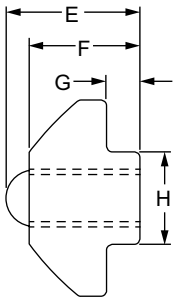

Part No.	Series	Material	Grade	Finish	A	B	C	D (Thread)	E	F	G	H	Weight
13050	15 40	Steel	1045	Bright Zinc	22.00mm	7.00mm	17.00mm	M4 x 0.7	11.60mm	9.60mm	2.90mm	8.00mm	.0181 kg
13051	15 40				22.00mm	7.00mm	17.00mm	M5 x 0.8	11.60mm	9.60mm	2.90mm	8.00mm	.0181 kg
13052	15 40				22.00mm	7.00mm	17.00mm	M6 x 1.0	11.60mm	9.60mm	2.90mm	8.00mm	.0172 kg
13053	15 40				22.00mm	7.00mm	17.00mm	M8 x 1.25	11.60mm	9.60mm	2.90mm	8.00mm	.0159 kg
13054	15 40				22.00mm	7.00mm	17.00mm	1/4-20	11.60mm	9.60mm	2.90mm	8.00mm	.0168 kg
13055	15 40				22.00mm	7.00mm	17.00mm	5/16-18	11.60mm	9.60mm	2.90mm	8.00mm	.0159 kg

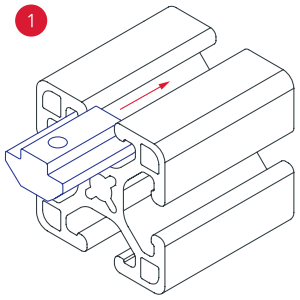

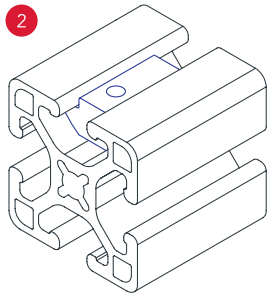

80/20 BUILD YOUR IDEA
More on 80/20® products available at 8020.net

Slide-In T-Nut with Ball Spring

- Loads from profile end
- Ball spring holds the T-nut in the T-slot

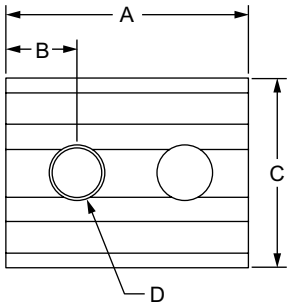

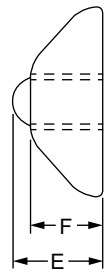

Part No.	Series	Material	Grade	Finish	A	B	C	D (Thread)	E	F	Weight
13064	15 40	Steel	1045	Bright Zinc	23.00mm	6.75mm	18.00mm	M5	8.50mm	6.80mm	.0150 kg
13065	15 40				23.00mm	6.75mm	18.00mm	M6	8.50mm	6.80mm	.0145 kg
13066	15 40				23.00mm	6.75mm	18.00mm	M8	8.50mm	6.80mm	.0132 kg

1

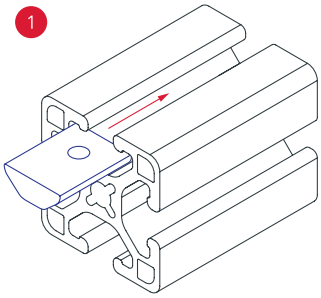

2

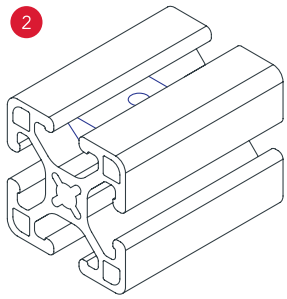

Hardware

Self-Aligning Slide-In T-Nut

- Loads from profile end
- Projection aligns in the T-slot

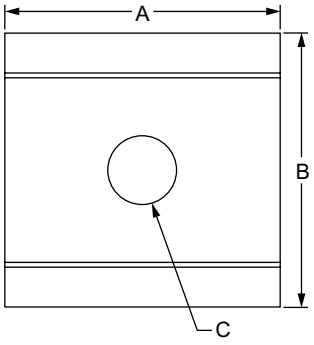

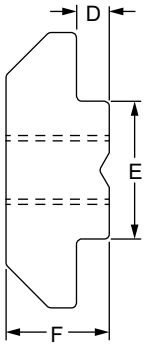

Part No.	Series	Material	Grade	Finish	A	B	C (Thread)	D	E	F	Weight
13022	15 30 40	Steel	1045	Bright Zinc	16.00mm	16.00mm	M4 x 0.7	1.80mm	7.80mm	6.00mm	.0082 kg
13023	15 30 40				16.00mm	16.00mm	M5 x 0.8	1.80mm	7.80mm	6.00mm	.0082 kg
13024	15 30 40				16.00mm	16.00mm	M6 x 1.0	1.80mm	7.80mm	6.00mm	.0077 kg
13025	15 30 40				16.00mm	16.00mm	M8 x 1.25	1.80mm	7.80mm	6.00mm	.0068 kg
13046	45				20.00mm	19.50mm	M4 x 0.7	5.10mm	9.80mm	10.60mm	.0214 kg
13047	45				20.00mm	19.50mm	M5 x 0.8	5.10mm	9.80mm	10.60mm	.0204 kg
13048	45				20.00mm	19.50mm	M6 x 1.0	5.10mm	9.80mm	10.60mm	.0200 kg
13049	45				20.00mm	19.50mm	M8 x 1.25	5.10mm	9.80mm	10.60mm	.0177 kg

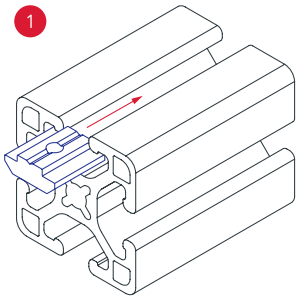

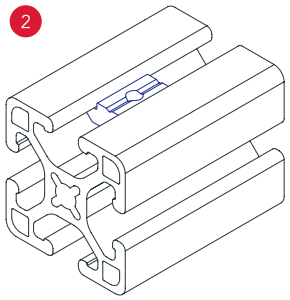

80/20 BUILD YOUR IDEA
More on 80/20® products available at 8020.net

Slide-In Economy T-Nut Block

- Loads from profile end
- Most cost-effective

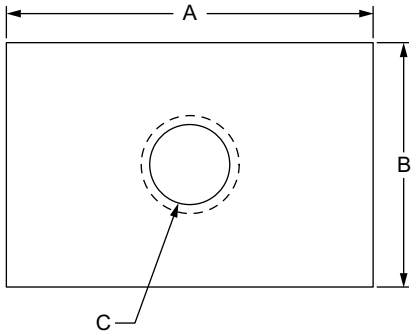

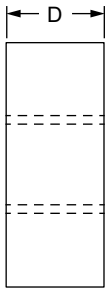

Part No.	Series	Material	Grade	Finish	Process	Color	A	B	C (Thread)	D	Weight
14124	10 25	Steel	ST50	Bright Zinc	Stamped	Silver	15.00mm	10.00mm	M6 x 1.0	4.00mm	.0036 kg
14126	15 40 45						19.00mm	16.00mm	M6 x 1.0	4.00mm	.0082 kg
14127	15 40 45						19.00mm	16.00mm	M8 x 1.25	4.00mm	.0073 kg
14130	15 40 45						20.00mm	13.00mm	M6 x 1.0	5.00mm	.0084 kg
14131	15 40 45						20.00mm	13.00mm	M8 x 1.25	5.00mm	.0082 kg
14159	20						9.00mm	9.00mm	M4 x 0.7	3.00mm	.0014 kg
14122	20						9.00mm	9.00mm	M5 x 0.8	3.00mm	.0014 kg
14125	45						15.00mm	10.00mm	M6 x 1.0	5.00mm	.0047 kg
14128	45						19.00mm	19.00mm	M6 x 1.0	4.00mm	.0099 kg
14129	45						19.00mm	19.00mm	M8 x 1.25	4.00mm	.0095 kg

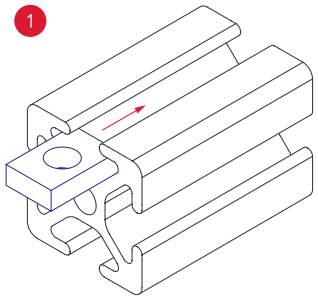

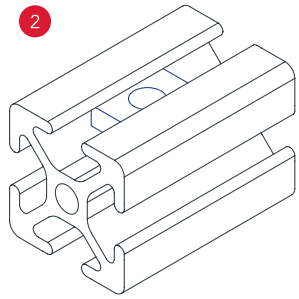

Hardware

Roll-In T-Nut with Flex Handle

- Loads from profile end or side
- Ideal for captivated profiles
- Flex handle to easily position and move within the T-slot
- Easy to reposition

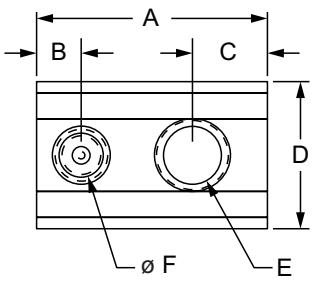

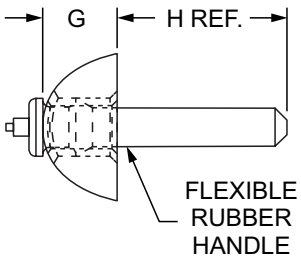

Part No.	Series	Material	Grade	Finish	A	B	C	D	E (Thread)	F	G	H	Weight
3375	10	Steel	1215	Black Zinc	.620"	.120"	.201"	.395"	10-32	.116"	.200"	.456"	.008 lb
3790	10	Steel	1215	Bright Zinc	.620"	.120"	.201"	.395"	10-32	.116"	.200"	.456"	.008 lb
3376	10	Steel	1215	Black Zinc	.620"	.120"	.201"	.395"	1/4-20	.116"	.200"	.456"	.008 lb
3624	10	Stainless-Steel	303 Stainless	Stainless	.620"	.120"	.201"	.395"	1/4-20	.116"	.200"	.456"	.008 lb
3791	10	Steel	1215	Bright Zinc	.620"	.120"	.201"	.395"	1/4-20	.116"	.200"	.456"	.008 lb
3875	10	Steel	1215	Bright Zinc	.620"	.120"	.201"	.395"	M5 x 0.8	.116"	.200"	.456"	.007 lb
3876	10	Steel	1215	Bright Zinc	.620"	.120"	.201"	.395"	M6 x 1.0	.116"	.200"	.456"	.008 lb
3284	15	Steel	1215	Black Zinc	.875"	.195"	.310"	.510"	10-32	.116"	.285"	.391"	.023 lb
3784	15	Steel	1215	Bright Zinc	.875"	.195"	.310"	.510"	10-32	.116"	.285"	.391"	.021 lb
3844	15	Steel	1215	Bright Zinc	.875"	.195"	.310"	.510"	M5 x 0.8	.116"	.285"	.391"	.025 lb
3283	15	Steel	1215	Black Zinc	.875"	.195"	.310"	.510"	1/4-20	.116"	.285"	.391"	.024 lb
3783	15	Steel	1215	Bright Zinc	.875"	.195"	.310"	.510"	1/4-20	.116"	.285"	.391"	.023 lb
3843	15	Steel	1215	Bright Zinc	.875"	.195"	.310"	.510"	M6 x 1.0	.116"	.285"	.391"	.023 lb
3282	15	Steel	1215	Black Zinc	.875"	.195"	.310"	.510"	5/16-18	.116"	.285"	.391"	.022 lb
3782	15	Steel	1215	Bright Zinc	.875"	.195"	.310"	.510"	5/16-18	.116"	.285"	.391"	.022 lb
3842	15	Steel	1215	Bright Zinc	.875"	.195"	.310"	.510"	M8 x 1.25	.116"	.285"	.391"	.022 lb
3602	15	Stainless-Steel	303 Stainless	Stainless	.875"	.195"	.310"	.510"	1/4-20	.116"	.285"	.391"	.023 lb
3600	15	Stainless-Steel	303 Stainless	Stainless	.875"	.195"	.310"	.510"	5/16-18	.116"	.285"	.391"	.021 lb
25-1956	25	Steel	1215	Bright Zinc	15.75mm	3.05mm	5.11mm	10.03mm	M5 x 0.8	2.95mm	5.08mm	11.58mm	.0041 kg
25-1966	25	Steel	1215	Bright Zinc	15.75mm	3.05mm	5.11mm	10.03mm	M6 x 1.0	2.95mm	5.08mm	11.58mm	.0036 kg
25-3376	25	Steel	1215	Black Zinc	15.75mm	3.05mm	5.11mm	10.03mm	1/4-20	2.95mm	5.08mm	11.58mm	.0036 kg
40-1966	40	Steel	1215	Bright Zinc	22.22mm	4.95mm	7.87mm	12.70mm	M6 x 1.0	2.95mm	7.24mm	9.93mm	.0104 kg
40-1986	40	Steel	1215	Bright Zinc	22.22mm	4.95mm	7.87mm	12.70mm	M8 x 1.25	2.95mm	7.24mm	9.93mm	.0118 kg
40-3282	40	Steel	1215	Black Zinc	22.22mm	4.95mm	7.87mm	12.70mm	5/16-18	2.95mm	7.24mm	9.93mm	.0100 kg
40-3283	40	Steel	1215	Black Zinc	22.22mm	4.95mm	7.87mm	12.70mm	1/4-20	2.95mm	7.24mm	9.93mm	.0109 kg

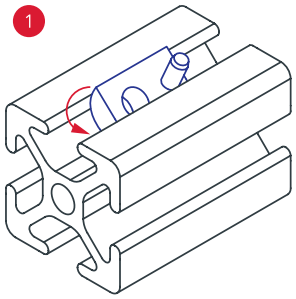

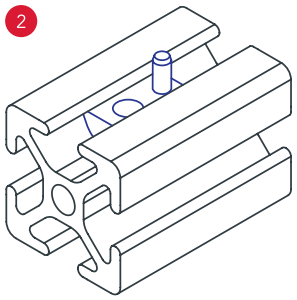

80/20 BUILD YOUR IDEA
More on 80/20® products available at 8020.net

Roll-In T-Nut with Set Screw

- Loads from profile end or side
- Ideal for captivated profiles
- Set screw holds T-nut in place in the T-slot
- Hex wrench required to adjust set screw (pg. 11-2)

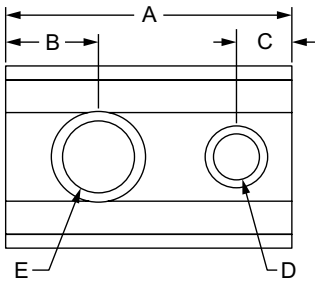

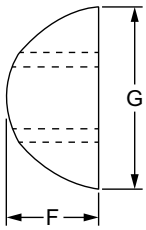

Part No.	Series	Material	Grade	Finish	A	B	C	D (Set Screw)	E (Thread)	F	G	Weight
3312	10	Steel	1215	Black Zinc	.620"	.201"	.120"	6-32	10-32	.200"	.395"	.009 lb
3313	10	Steel	1215	Black Zinc	.620"	.201"	.120"	6-32	1/4-20	.200"	.395"	.008 lb
3309	15	Steel	1215	Black Zinc	.875"	.310"	.195"	10-24	10-32	.285"	.510"	.024 lb
3310	15	Steel	1215	Black Zinc	.875"	.310"	.195"	10-24	1/4-20	.285"	.510"	.024 lb
3311	15	Steel	1215	Black Zinc	.875"	.310"	.195"	10-24	5/16-18	.285"	.510"	.020 lb
3605	15	Stainless-Steel	303 Stainless	Stainless	.875"	.310"	.195"	10-32	1/4-20	.285"	.510"	.023 lb
3608	15	Stainless-Steel	303 Stainless	Stainless	.875"	.310"	.195"	10-32	5/16-18	.285"	.510"	.021 lb
3781	15	Steel	1215	Bright Zinc	.875"	.310"	.195"	10-24	10-32	.285"	.510"	.023 lb
3787	15	Steel	1215	Bright Zinc	.875"	.310"	.195"	10-24	1/4-20	.285"	.510"	.024 lb
3788	15	Steel	1215	Bright Zinc	.875"	.310"	.195"	10-24	5/16-18	.285"	.510"	.020 lb
3892	15	Steel	1215	Bright Zinc	.875"	.310"	.195"	M5 x 0.8	M5 x 0.8	.285"	.510"	.023 lb
3894	15	Steel	1215	Bright Zinc	.875"	.310"	.195"	M5 x 0.8	M8 x 1.25	.285"	.510"	.020 lb
3898	15	Steel	1215	Bright Zinc	.310"	.875"	.195"	M5 x 0.8	M6 x 1.0	.285"	.510"	.023 lb
25-3312	25	Steel	1215	Black Zinc	15.75mm	5.11mm	3.05mm	6-32	10-32	5.08mm	10.03mm	.0041 kg
25-3313	25	Steel	1215	Black Zinc	15.75mm	5.11mm	3.05mm	6-32	1/4-20	5.08mm	10.03mm	.0036 kg
40-1968	40	Steel	1215	Bright Zinc	22.22mm	7.87mm	4.95mm	10-24	M6 x 1.0	7.24mm	12.95mm	.0109 kg
40-1988	40	Steel	1215	Bright Zinc	22.22mm	7.87mm	4.95mm	10-24	M8 x 1.25	7.24mm	12.95mm	.0095 kg
40-3310	40	Steel	1215	Black Zinc	22.22mm	7.87mm	4.95mm	10-24	1/4-20	7.24mm	12.95mm	.0104 kg
40-3311	40	Steel	1215	Black Zinc	22.22mm	7.87mm	4.95mm	10-24	5/16-18	7.24mm	12.95mm	.0100 kg

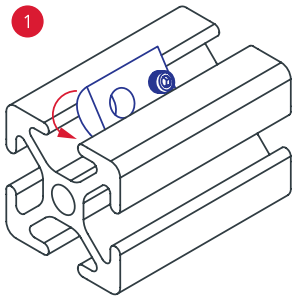

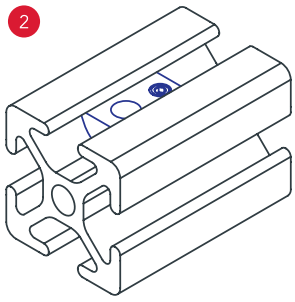

Hardware

Roll-In T-Nut with Ball Spring

- Loads from profile end or side
- Ideal for captivated profiles
- Ball spring holds the T-nut in the T-slot
- Easy to reposition

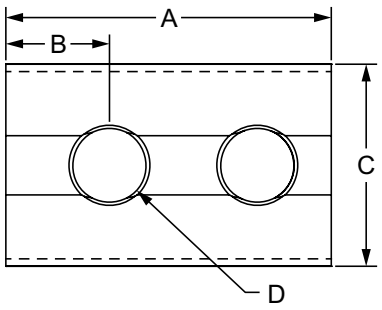

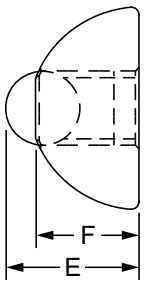

Part No.	Series	Material	Grade	Finish	A	B	C	D (Thread)	E	F	Weight
3919	10	Steel	1045	Bright Zinc	.630"	.213"	.386"	M4 x 0.7	.253"	.203"	.009 lb
3920	10	Steel	1045	Bright Zinc	.630"	.213"	.386"	M5 x 0.8	.253"	.203"	.009 lb
3921	10	Steel	1045	Bright Zinc	.630"	.213"	.386"	M6 x 1.0	.253"	.203"	.008 lb
3922	10	Steel	1045	Bright Zinc	.630"	.213"	.386"	10-32	.253"	.203"	.008 lb
3923	10	Steel	1045	Bright Zinc	.630"	.213"	.386"	1/4-20	.253"	.203"	.008 lb
3666	10	Stainless-Steel	304 Stainless	Stainless	.630"	.213"	.386"	M4 x 0.7	.253"	.203"	.008 lb
3667	10	Stainless-Steel	304 Stainless	Stainless	.630"	.213"	.386"	M5 x 0.8	.253"	.203"	.009 lb
3668	10	Stainless-Steel	304 Stainless	Stainless	.630"	.213"	.386"	M6 x 1.0	.253"	.203"	.008 lb
3669	10	Stainless-Steel	304 Stainless	Stainless	.630"	.213"	.386"	10-32	.253"	.203"	.009 lb
3670	10	Stainless-Steel	304 Stainless	Stainless	.630"	.213"	.386"	1/4-20	.253"	.203"	.009 lb
3913	15	Steel	1045	Bright Zinc	.866"	.234"	.539"	M5 x 0.8	.343"	.276"	.023 lb
3914	15	Steel	1045	Bright Zinc	.866"	.234"	.539"	M6 x 1.0	.343"	.276"	.022 lb
3915	15	Steel	1045	Bright Zinc	.866"	.234"	.539"	M8 x 1.25	.343"	.276"	.021 lb
3916	15	Steel	1045	Bright Zinc	.866"	.234"	.539"	1/4-20	.343"	.276"	.022 lb
3917	15	Steel	1045	Bright Zinc	.866"	.234"	.539"	5/16-18	.343"	.276"	.022 lb
13018	15 40	Stainless-Steel	304 Stainless	Stainless	22.00mm	6.50mm	13.70mm	1/4-20	8.70mm	7.00mm	.0095 kg
13021	15 40	Stainless-Steel	304 Stainless	Stainless	22.00mm	6.50mm	13.70mm	5/16-18	8.70mm	7.00mm	.0091 kg
40-3913	40	Steel	1045	Bright Zinc	22.00mm	5.90mm	13.70mm	M5 x 0.8	8.70mm	7.00mm	.0100 kg
40-3914	40	Steel	1045	Bright Zinc	22.00mm	5.90mm	13.70mm	M6 x 1.0	8.70mm	7.00mm	.0100 kg
40-3915	40	Steel	1045	Bright Zinc	22.00mm	5.90mm	13.70mm	M8 x 1.25	8.70mm	7.00mm	.0091 kg

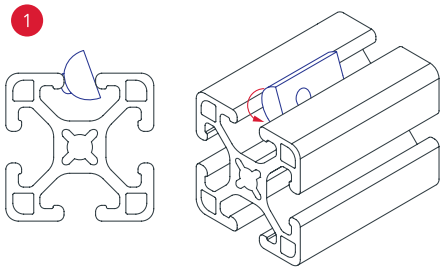

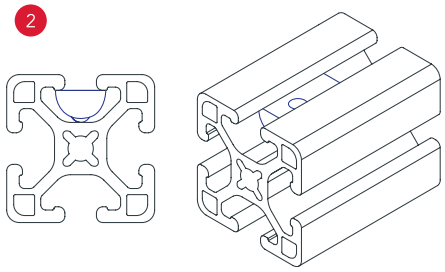

80/20 BUILD YOUR IDEA
More on 80/20® products available at 8020.net

Self-Aligning Roll-In T-Nut with Ball Spring

- Loads from profile end or side
- Ideal for captivated profiles
- Projection aligns in the T-slot
- Ball spring holds the fastener in place

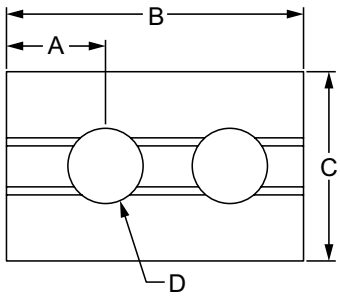

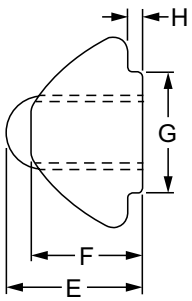

Part No.	Series	Material	Grade	Finish	A	B	C	D (Thread)	E	F	G	H	Weight
13082	20	Steel	1045	Bright Zinc	3.80mm	12.00mm	7.70mm	M3 x 0.5	5.50mm	4.50mm	5.00mm	0.60mm	.0018 kg
13083	20	Steel	1045	Bright Zinc	3.80mm	12.00mm	7.70mm	M4 x 0.7	5.50mm	4.50mm	5.00mm	0.60mm	.0018 kg
13084	20	Steel	1045	Bright Zinc	3.80mm	12.00mm	7.70mm	M5 x 0.8	5.50mm	4.50mm	5.00mm	0.60mm	.0018 kg
13027	15 40	Steel	1045	Bright Zinc	6.70mm	22.00mm	13.50mm	M4 x 0.7	8.90mm	7.20mm	7.80mm	0.80mm	.0109 kg
13028	15 40	Steel	1045	Bright Zinc	6.70mm	22.00mm	13.50mm	M5 x 0.8	8.90mm	7.20mm	7.80mm	0.80mm	.0104 kg
13031	15 40	Steel	1045	Bright Zinc	6.70mm	22.00mm	13.50mm	M6 x 1.0	8.90mm	7.20mm	7.80mm	0.80mm	.0100 kg
13034	15 40	Steel	1045	Bright Zinc	6.70mm	22.00mm	13.50mm	M8 x 1.25	8.90mm	7.20mm	7.80mm	0.80mm	.0086 kg
13039	15 40	Steel	1045	Bright Zinc	6.70mm	22.00mm	13.50mm	10-32	8.90mm	7.20mm	7.80mm	0.80mm	.0104 kg
13037	15 40	Steel	1045	Bright Zinc	6.70mm	22.00mm	13.50mm	1/4-20	8.90mm	7.20mm	7.80mm	0.80mm	.0099 kg
13040	15 40	Steel	1045	Bright Zinc	6.70mm	22.00mm	13.50mm	5/16-18	8.90mm	7.20mm	7.80mm	0.80mm	.0091 kg
13029	15 40	Stainless-Steel	304 Stainless	Stainless	6.70mm	22.00mm	13.50mm	M5 x 0.8	8.90mm	7.20mm	7.80mm	0.80mm	.0104 kg
13032	15 40	Stainless-Steel	304 Stainless	Stainless	6.70mm	22.00mm	13.50mm	M6 x 1.0	8.90mm	7.20mm	7.80mm	0.80mm	.0099 kg
13035	15 40	Stainless-Steel	304 Stainless	Stainless	6.70mm	22.00mm	13.50mm	M8 x 1.25	8.90mm	7.20mm	7.80mm	0.80mm	.0086 kg

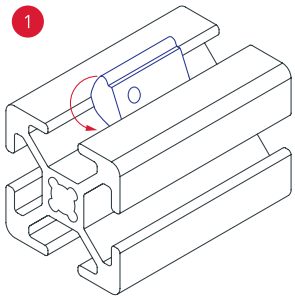

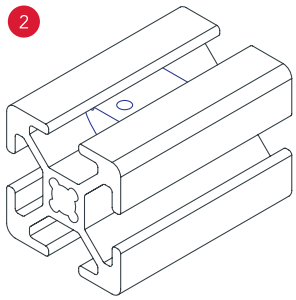

Hardware

Self-Aligning Roll-In T-Nut

- Loads from profile end or side
- Ideal for captivated profiles
- Projection aligns in the T-slot
- Easy to reposition

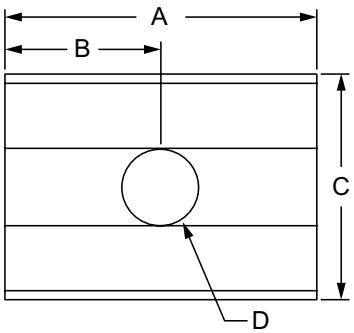

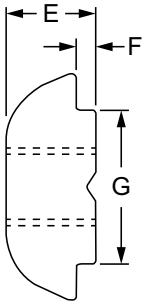

Part No.	Series	Material	Grade	Finish	A	B	C	D (Thread)	E	F	G	Weight
13088	15 30 40	Steel	Q235	Bright Zinc	16.00mm	8.00mm	11.80mm	M4 x 0.7	4.80mm	1.00mm	8.00mm	.0050 kg
13090	15 30 40				16.00mm	8.00mm	11.80mm	M5 x 0.8	4.80mm	1.00mm	8.00mm	.0048 kg
13092	15 30 40				16.00mm	8.00mm	11.80mm	M6 x 1.0	4.80mm	1.00mm	8.00mm	.0045 kg
13094	15 30 40				16.00mm	8.00mm	11.80mm	M8 x 1.25	4.80mm	1.00mm	8.00mm	.0036 kg
13096	15 30 40				16.00mm	8.00mm	11.80mm	1/4-20	4.80mm	1.00mm	8.00mm	.0045 kg
13098	15 30 40				16.00mm	8.00mm	11.80mm	5/16-18	4.80mm	1.00mm	8.00mm	.0036 kg
13058	45				20.00mm	10.00mm	15.00mm	M5 x 0.8	6.00mm	2.00mm	9.80mm	.0100 kg
13060	45				20.00mm	10.00mm	15.00mm	M6 x 1.0	6.00mm	2.00mm	9.80mm	.0095 kg
13062	45				20.00mm	10.00mm	15.00mm	M8 x 1.25	6.00mm	2.00mm	9.80mm	.0082 kg

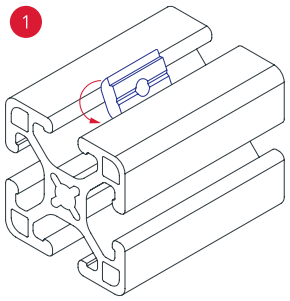

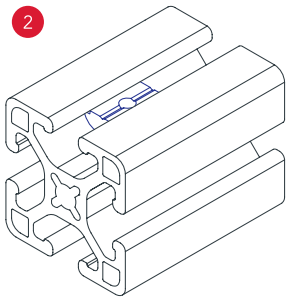

80/20 BUILD YOUR IDEA
More on 80/20® products available at 8020.net

Tall Self-Aligning Roll-In T-Nut with Spring Leaf

- Loads from profile end or side
- Ideal for captivated profiles
- Projection aligns in the T-slot
- Spring leaf holds fastener in place

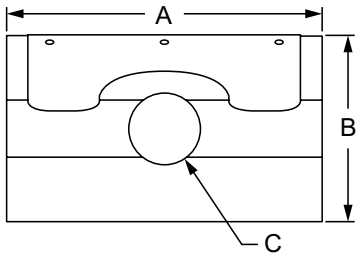

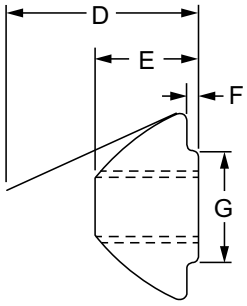

Part No.	Series	Material	Grade	Finish	A	B	C (Thread)	D	E	F	G	Weight
13030	15 40	Steel	1045	Bright Zinc	22.00mm	13.00mm	M5 x 0.8	13.40mm	7.19mm	0.79mm	7.80mm	.0113 kg
13033	15 40				22.00mm	13.00mm	M6 x 1.0	13.40mm	7.19mm	0.79mm	7.80mm	.0109 kg
13036	15 40				22.00mm	13.00mm	M8 x 1.25	13.40mm	7.19mm	0.79mm	7.80mm	.0095 kg
13038	15 40				22.00mm	13.00mm	1/4-20	13.40mm	7.19mm	0.79mm	7.80mm	.0109 kg
13041	15 40				22.00mm	13.00mm	5/16-18	13.40mm	7.19mm	0.79mm	7.80mm	.0100 kg

1

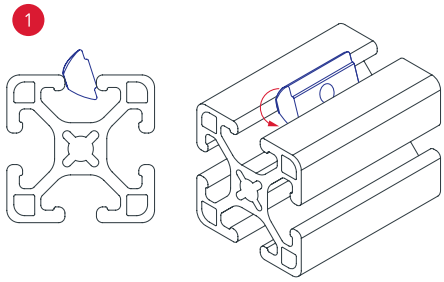

2

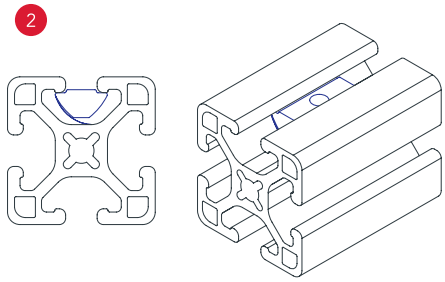

Hardware

Short Self-Aligning Roll-In T-Nut with Spring Leaf

- Loads from profile end or side
- Ideal for captivated profiles
- Projection aligns in the T-slot
- Spring leaf holds fastener in place

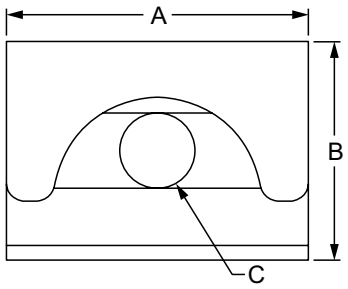

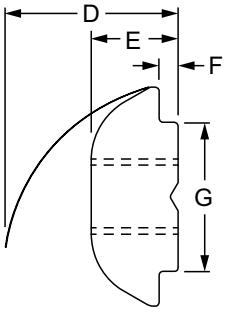

Part No.	Series	Material	Grade	Finish	A	B	C (Thread)	D	E	F	G	Weight
13089	15 30 40	Steel	Q235	Bright Zinc	16.00mm	11.80mm	M4 x 0.7	9.30mm	4.80mm	1.00mm	8.00mm	.0050 kg
13091	15 30 40				16.00mm	11.80mm	M5 x 0.8	9.30mm	4.80mm	1.00mm	8.00mm	.0050 kg
13093	15 30 40				16.00mm	11.80mm	M6 x 1.0	9.30mm	4.80mm	1.00mm	8.00mm	.0045 kg
13095	15 30 40				16.00mm	11.80mm	M8 x 1.25	9.30mm	4.80mm	1.00mm	8.00mm	.0041 kg
13059	45				20.00mm	15.00mm	M5 x 0.8	13.65mm	6.00mm	1.50mm	10.00mm	.0100 kg
13061	45				20.00mm	15.00mm	M6 x 1.0	13.65mm	6.00mm	1.50mm	10.00mm	.0095 kg
13063	45				20.00mm	15.00mm	M8 x 1.25	13.65mm	6.00mm	1.50mm	10.00mm	.0086 kg

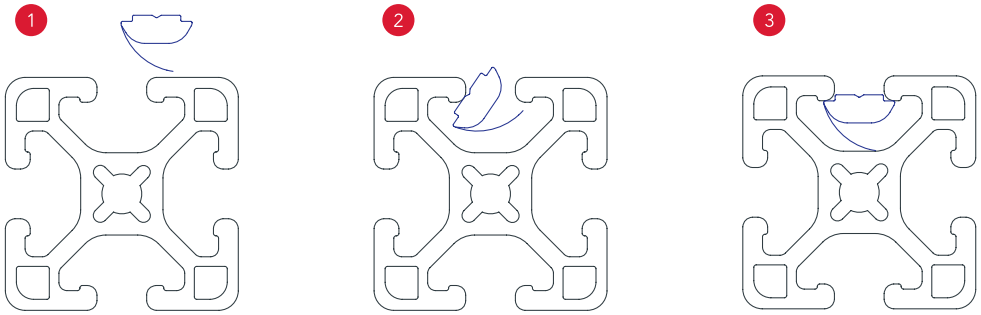

80/20 BUILD YOUR IDEA
More on 80/20® products available at 8020.net

Economy Drop-In T-Nut

- Loads from profile end or side
- Ideal for captivated profiles

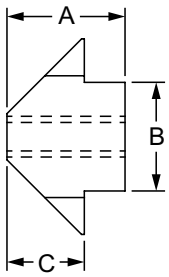

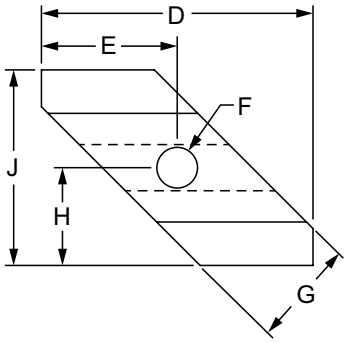

Part No.	Series	Material	Grade	Finish	A	B	C	D	E	F (Thread)	G	H	J	Weight
13179	15 40	Zinc	Die-Cast	Bright Zinc	8.70mm	8.00mm	5.70mm	20.00mm	10.00mm	M3 x 0.5	7.80mm	10.00mm	20.00mm	.0050 kg
13180	15 40				8.70mm	8.00mm	5.70mm	20.00mm	10.00mm	M4 x 0.7	7.80mm	10.00mm	20.00mm	.0050 kg
13181	15 40				8.70mm	8.00mm	5.70mm	20.00mm	10.00mm	M5 x 0.8	7.80mm	10.00mm	20.00mm	.0045 kg
13182	15 40				8.70mm	8.00mm	5.70mm	20.00mm	10.00mm	M6 x 1.0	7.80mm	10.00mm	20.00mm	.0041 kg
14161	15 40				8.70mm	8.00mm	5.70mm	20.00mm	10.00mm	1/4-20	7.80mm	10.00mm	20.00mm	.0041 kg

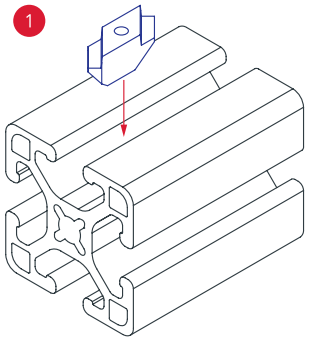

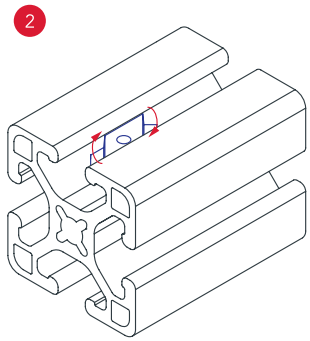

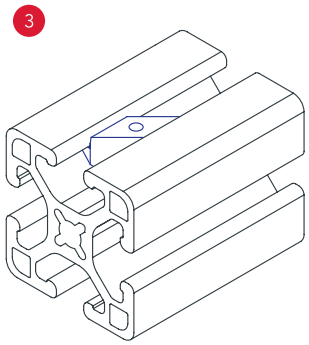

Hardware

Standard Drop-In T-Nut

- Loads from profile end or side
- Ideal for captivated profiles
- Ridges bite into profile surface for strong connection
- Easy to reposition

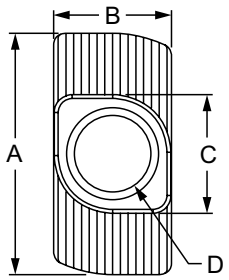

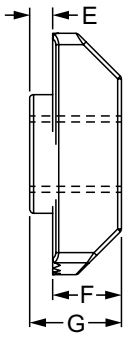

10 & 25 Series Standard Drop-In T-Nut

Part No.	Series	Material	Finish	A	B	C	D (Thread)	E	F	G	Weight
14162	10 25	Steel	Bright Zinc	11.50mm	5.70mm	5.70mm	10-32	1.00mm	3.20mm	4.20mm	.0014 kg
14164	10 25			11.50mm	5.80mm	5.70mm	M4 x 0.7	1.00mm	3.20mm	4.20mm	.0014 kg
14166	10 25	Stainless-Steel	Stainless	11.50mm	5.70mm	5.70mm	M4 x 0.7	1.00mm	3.20mm	4.20mm	.0014 kg

15 & 40 Series Standard Drop-In T-Nut

Part No.	Series	Material	Finish	A	B	C	D (Thread)	E	F	G	Weight
3930	15 40	Steel	Bright Zinc	.620"	.305"	.308"	M5 x 0.8	.059"	.180"	.239"	.007 lb
3931	15 40		Bright Zinc	.620"	.305"	.308"	M6 x 1.0	.059"	.180"	.239"	.006 lb
3932	15 40		Bright Zinc	.620"	.305"	.308"	10-32	.059"	.180"	.239"	.007 lb
3933	15 40		Bright Zinc	.620"	.305"	.308"	1/4-20	.059"	.180"	.239"	.007 lb
13114	15 40		Bright Zinc	16.00mm	7.90mm	7.90mm	M4 x 0.7	3.00mm	4.70mm	7.70mm	.0036 kg
13116	15 40		Bright Zinc	16.00mm	7.90mm	7.90mm	M5 x 0.8	3.00mm	3.00mm	7.70mm	.0041 kg
13119	15 40		Bright Zinc	16.00mm	7.90mm	7.90mm	M6 x 1.0	3.00mm	4.70mm	7.70mm	.0037 kg
14165	15 40		Bright Zinc	16.00mm	7.90mm	7.90mm	1/4-20	3.00mm	4.70mm	7.70mm	.0036 kg

30 Series Standard Drop-In T-Nut

Part No.	Series	Material	Finish	A	B	C	D (Thread)	E	F	G	Weight
13118	30	Stainless-Steel	Stainless	16.00mm	8.00mm	8.00mm	M6 x 1.0	1.50mm	4.50mm	6.00mm	.0036 kg
13111	30	Stainless-Steel	Stainless	15.80mm	7.90mm	7.70mm	1/4-20	1.50mm	4.50mm	6.00mm	.0027 kg
13113	30	Steel	Bright Zinc	16.00mm	8.00mm	8.00mm	M4 x 0.7	1.50mm	4.50mm	6.00mm	.0041 kg
13115	30	Steel	Bright Zinc	16.00mm	8.00mm	8.00mm	M5 x 0.8	1.50mm	4.50mm	6.00mm	.0034 kg
13117	30	Steel	Bright Zinc	16.00mm	8.00mm	8.00mm	M6 x 1.0	1.50mm	4.50mm	6.00mm	.0032 kg
13112	30	Steel	Bright Zinc	16.00mm	8.00mm	7.80mm	10-32	1.70mm	4.70mm	6.40mm	.0036 kg
13110	30	Steel	Bright Zinc	16.00mm	8.00mm	8.00mm	1/4-20	1.50mm	4.50mm	6.00mm	.0032 kg

80/20 BUILD YOUR IDEA
More on 80/20® products available at 8020.net

Standard Drop-in T-Nut (Continued)

45 Series Standard Drop-In T-Nut

Part No.	Series	Material	Finish	A	B	C	D (Thread)	E	F	G	Weight
13123	45	Steel	Bright Zinc	19.60mm	9.80mm	9.90mm	M4 x 0.7	3.00mm	5.50mm	8.50mm	.0077 kg
13127	45			19.60mm	9.80mm	9.90mm	M5 x 0.8	3.00mm	5.50mm	8.50mm	.0073 kg
13129	45			19.60mm	10.00mm	10.00mm	M6 x 1.0	3.00mm	5.70mm	8.70mm	.0068 kg
13132	45			19.60mm	10.00mm	10.00mm	M8 x 1.25	3.00mm	5.70mm	8.70mm	.0054 kg
13122	45			19.60mm	9.70mm	9.90mm	10-32	3.00mm	5.70mm	8.70mm	.0075 kg
13120	45			19.60mm	9.70mm	9.90mm	1/4-20	3.00mm	5.70mm	8.70mm	.0068 kg
13124	45			19.60mm	9.70mm	9.90mm	5/16-18	3.00mm	5.70mm	8.70mm	.0059 kg
13130	45	Stainless-Steel	Stainless	19.60mm	9.90mm	9.90mm	M6 x 1.0	3.00mm	5.70mm	8.70mm	.0098 kg
13133	45			19.60mm	9.90mm	9.90mm	M8 x 1.25	3.00mm	5.70mm	8.70mm	.0059 kg
13121	45			19.20mm	9.80mm	9.80mm	1/4-20	3.00mm	5.70mm	8.70mm	.0068 kg
13125	45			19.20mm	9.90mm	9.90mm	5/16-18	3.00mm	5.50mm	8.50mm	.0064 kg

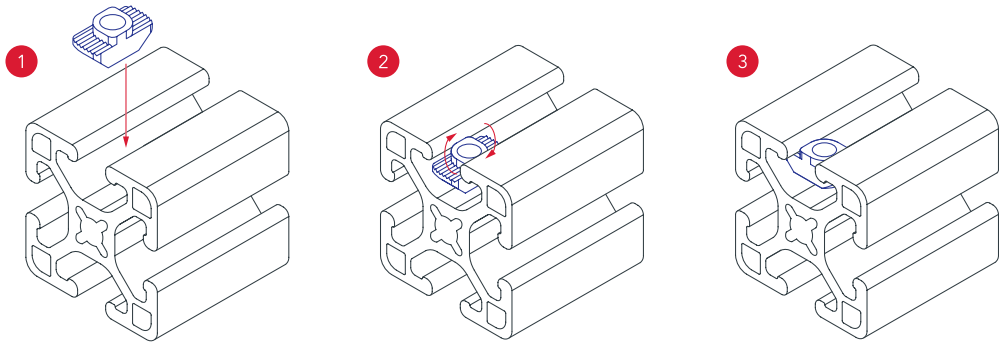

Hardware

Slide-In T-Nut with Holding Spring

- Loads from profile end
- Removable spring
- Projection aligns in the T-slot
- Spring holds fastener in place

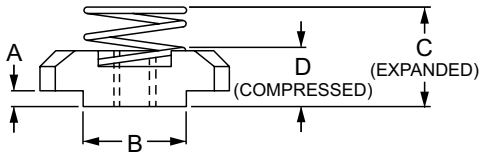

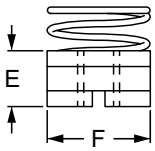

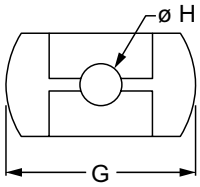

Part No.	Series	Material	Grade	Finish	A	B	C	D	E	F	G	H	Weight
13106	45	Steel	Q235	Bright Zinc	1.50mm	10.00mm	12.00mm	6.00mm	5.30mm	10.00mm	18.00mm	M4 x 0.7	.0048 kg
13107	45				1.50mm	10.00mm	12.00mm	6.00mm	5.30mm	10.00mm	18.00mm	M5 x 0.8	.0045 kg
13108	45				1.50mm	10.00mm	12.00mm	6.00mm	5.30mm	10.00mm	18.00mm	M6 x 1.0	.0043 kg
13109	45				1.50mm	10.00mm	12.00mm	6.00mm	5.30mm	10.00mm	18.00mm	M8 x 1.25	.0036 kg

80/20 BUILD YOUR IDEA
More on 80/20® products available at 8020.net

Double Anchor Slide-In T-Nut

- Loads from profile end
- Only used with double anchor fastener

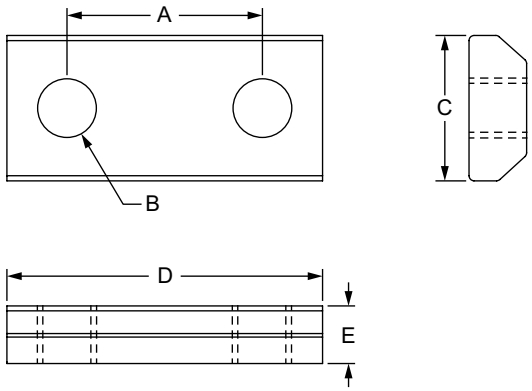

Part No.	Series	Material	Grade	Finish	A	B (Thread)	C	D	E	Weight
3085	10	Steel	1215	Black Zinc	.580"	10-32	.431"	.936"	.171"	.015 lb
3086	10			Black Zinc	1.580"	10-32	.431"	1.936"	.171"	.038 lb
3903	10			Bright Zinc	.565"	M5 x 0.8	.431"	.937"	.171"	.016 lb
3906	10			Bright Zinc	1.566"	M5 x 0.8	.431"	1.937"	.171"	.034 lb
3087	15			Black Zinc	.875"	5/16-18	.625"	1.437"	.250"	.046 lb
3088	15			Black Zinc	2.362"	5/16-18	.625"	2.937"	.250"	.105 lb
3908	15			Bright Zinc	.875"	M8 x 1.25	.625"	1.437"	.250"	.044 lb
3910	15			Bright Zinc	2.362"	M8 x 1.25	.625"	2.937"	.250"	.107 lb
25-3085	25			Bright Zinc	14.30mm	M5 x 0.8	10.95mm	24.46mm	4.34mm	.0068 kg
25-3086	25			Bright Zinc	39.57mm	M5 x 0.8	10.95mm	49.17mm	4.34mm	.0154 kg
40-3087	40			Bright Zinc	24.00mm	M8 x 1.25	15.88mm	38.25mm	6.16mm	.0228 kg
40-3088	40			Bright Zinc	64.01mm	M8 x 1.25	15.88mm	78.16mm	6.16mm	.0516 kg

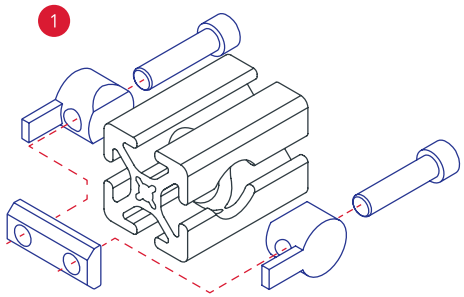

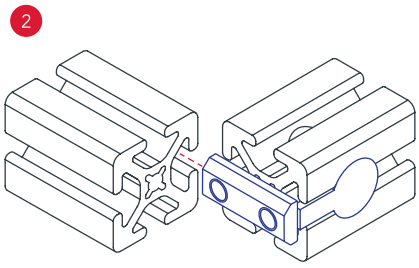

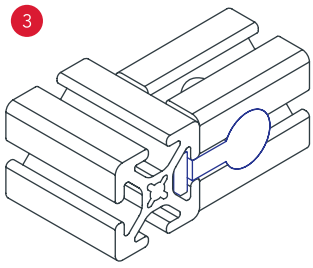

Hardware

Nylon T-Slot Nut

- Stays in place in T-slot
- Sold in packs of 12 or 50 based on version
- Screw expands nut into the T-slot
- Available with or without screws

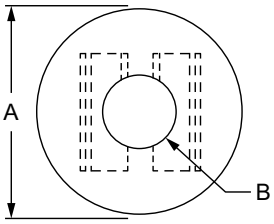

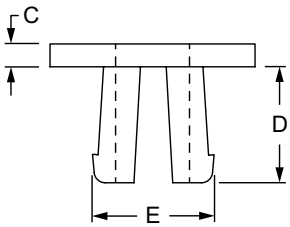

Part No.	Series	Screw	Qty.	Material	Grade	Color	A	B	C	D	E	Weight
3346	15	No	50	Plastic	Nylon	White	.557"	.200"	.062"	.330"	.315"	.001 lb
3348	15	Yes	12				.557"	.200"	.062"	.330"	.315"	.305 lb
40-3346	40	No	50				14.15mm	5.08mm	1.57mm	8.40mm	8.00mm	.0008 kg
40-3348	40	Yes	12				14.15mm	5.08mm	1.57mm	8.40mm	8.00mm	.1380 kg

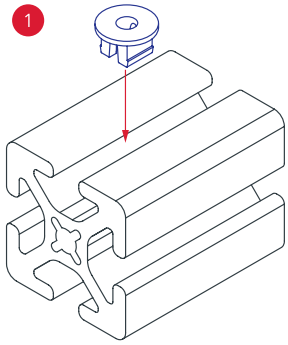

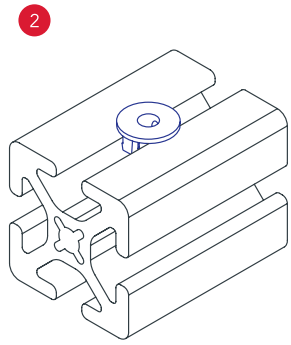

80/20 BUILD YOUR IDEA
More on 80/20® products available at 8020.net

Button Head Socket Cap Screw

Black Zinc/
Black-Coated

Blue Zinc/
Blue-Coated

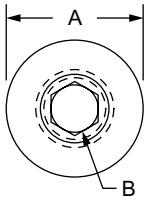

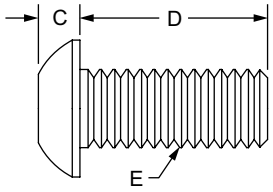

Bright Zinc

Stainless Steel

Part No.	Series	Material	Finish	A	B	C	D (Length)	E (Thread)	Thread Length	Weight
3005	F	Steel	Black Zinc	.305"	3/32	.082"	.375"	8-32	Full Thread	.002 lb
3024	F	Steel	Black Zinc	.305"	3/32	.082"	.500"	8-32	Full Thread	.003 lb
3032	F	Steel	Black Zinc	.305"	3/32	.082"	.875"	8-32	Full Thread	.005 lb
3042	F	Steel	Black Zinc	.354	1/8	.096"	.375"	10-32	Full Thread	.040 lb
3694	F	Stainless-Steel	Stainless	.354"	1/8	.096"	.375"	10-32	Full Thread	.004 lb
3050	F	Steel	Black Zinc	.354"	1/8	.096"	.500"	10-32	Full Thread	.005 lb
3696	F	Stainless-Steel	Stainless	.354"	1/8	.096"	.500"	10-32	Full Thread	.005 lb
3051	F	Steel	Black Zinc	.354"	1/8	.096"	.625"	10-32	Full Thread	.005 lb
3698	F	Stainless-Steel	Stainless	.354"	1/8	.096"	.625"	10-32	Full Thread	.006 lb
3054	F	Steel	Black Zinc	.354"	1/8	.096"	.750"	10-32	Full Thread	.006 lb
3059	F	Steel	Black Zinc	.428"	5/32	.127"	.375"	1/4-20	Full Thread	.007 lb
3688	F	Stainless-Steel	Stainless	.428"	5/32	.127"	.375"	1/4-20	Full Thread	.007 lb
65-3059	F	Steel	Black Zinc	.428"	5/32	.127"	.375"	1/4-20	Full Thread	.007 lb
3061	F	Steel	Black Zinc	.428"	5/32	.127"	.500"	1/4-20	Full Thread	.008 lb
3690	F	Stainless-Steel	Stainless	.428"	5/32	.127"	.500"	1/4-20	Full Thread	.008 lb
65-3061	F	Steel	Black Zinc	.428"	5/32	.127"	.500"	1/4-20	Full Thread	.008 lb
3063	F	Steel	Black Zinc	.428"	5/32	.127"	.625"	1/4-20	Full Thread	.009 lb
3663	F	Stainless-Steel	Stainless	.428"	5/32	.127"	.625"	1/4-20	Full Thread	.009 lb
65-3063	F	Steel	Black Zinc	.428"	5/32	.127"	.625"	1/4-20	Full Thread	.010 lb
3065	F	Steel	Black Zinc	.428"	5/32	.127"	.750"	1/4-20	Full Thread	.011 lb
3692	F	Stainless-Steel	Stainless	.428"	5/32	.127"	.750"	1/4-20	Full Thread	.010 lb
65-3065	F	Steel	Black Zinc	.428"	5/32	.127"	.750"	1/4-20	Full Thread	.011 lb
3104	F	Steel	Black Zinc	.537"	3/16	.159"	.500"	5/16-18	Full Thread	.014 lb
3609	F	Stainless-Steel	Stainless	.537"	3/16	.159"	.500"	5/16-18	Full Thread	.014 lb
3940	F RT	Steel	Bright Zinc	.537"	3/16	.159"	.500"	5/16-18	Full Thread	.018 lb
65-3104	F	Steel	Black Zinc	.537"	3/16	.159"	.500"	5/16-18	Full Thread	.014 lb
3111	F	Steel	Black Zinc	.537"	3/16	.159"	.625"	5/16-18	Full Thread	.020 lb
3611	F	Stainless-Steel	Stainless	.537"	3/16	.159"	.625"	5/16-18	Full Thread	.017 lb
65-3111	F	Steel	Black Zinc	.537"	3/16	.159"	.625"	5/16-18	Full Thread	.016 lb
3114	F	Steel	Black Zinc	.537"	3/16	.159"	.750"	5/16-18	Full Thread	.019 lb
3614	F	Stainless-Steel	Stainless	.537"	3/16	.159"	.750"	5/16-18	Full Thread	.019 lb
3941	F RT	Steel	Bright Zinc	.537"	3/16	.159"	.750"	5/16-18	Full Thread	.028 lb
65-3114	F	Steel	Black Zinc	.537"	3/16	.159"	.750"	5/16-18	Full Thread	.018 lb
3117	F	Steel	Black Zinc	.537"	3/16	.159"	.875"	5/16-18	Full Thread	.020 lb
3617	F	Stainless-Steel	Stainless	.537"	3/16	.159"	.875"	5/16-18	Full Thread	.021 lb
3118	F	Steel	Black Zinc	.537"	3/16	.159"	1.000"	5/16-18	Full Thread	.022 lb
3621	F	Stainless-Steel	Stainless	.537"	3/16	.159"	1.000"	5/16-18	Full Thread	.023 lb
3942	F RT	Steel	Bright Zinc	.537"	3/16	.159"	1.000"	5/16-18	Full Thread	.023 lb
65-3118	F	Steel	Black Zinc	.537"	3/16	.159"	1.000"	5/16-18	Full Thread	.022 lb
3943	F RT	Steel	Bright Zinc	.537"	3/16	.159"	1.250"	5/16-18	Full Thread	.027 lb
3944	F RT	Steel	Bright Zinc	.537"	3/16	.159"	1.500"	5/16-18	Full Thread	.031 lb
3945	F RT	Steel	Bright Zinc	.537"	3/16	.159"	1.750"	5/16-18	Full Thread	.035 lb
3946	F RT	Steel	Bright Zinc	.537"	3/16	.159"	2.000"	5/16-18	Full Thread	.034 lb
3947	F RT	Steel	Bright Zinc	.537"	3/16	.159"	2.250"	5/16-18	Full Thread	.044 lb
3948	F RT	Steel	Bright Zinc	.537"	3/16	.159"	3.500"	5/16-18	Full Thread	.065 lb

Hardware

Button Head Socket Cap Screw (Continued)

Part No.	Series	Material	Finish	A	B	C	D (Length)	E (Thread)	Thread Length	Weight
11-4310	M	Steel	Black Zinc	7.60mm	2.50mm	2.20mm	10.00mm	M4 x 0.7	Full Thread	.0012 kg
11-4312	M	Steel	Black Zinc	7.60mm	2.50mm	2.20mm	12.00mm	M4 x 0.7	Full Thread	.0014 kg
11-5308	M	Steel	Black Zinc	9.32mm	3.00mm	2.63mm	8.00mm	M5 x 0.8	Full Thread	.0018 kg
11-5310	M	Steel	Black Zinc	9.32mm	3.00mm	2.63mm	10.00mm	M5 x 0.8	Full Thread	.0023 kg
13-5310	M	Steel	Blue Zinc	9.32mm	3.00mm	2.63mm	10.00mm	M5 x 0.8	Full Thread	.0023 kg
17-5310	M	Stainless-Steel	Stainless	9.32mm	3.00mm	2.63mm	10.00mm	M5 x 0.8	Full Thread	.0023 kg
11-5312	M	Steel	Black Zinc	9.32mm	3.00mm	2.63mm	12.00mm	M5 x 0.8	Full Thread	.0023 kg
13-5312	M	Steel	Blue Zinc	9.32mm	3.00mm	2.63mm	12.00mm	M5 x 0.8	Full Thread	.0023 kg
17-5312	M	Stainless-Steel	Stainless	9.32mm	3.00mm	2.63mm	12.00mm	M5 x 0.8	Full Thread	.0023 kg
11-5314	M	Steel	Black Zinc	9.32mm	3.00mm	2.63mm	14.00mm	M5 x 0.8	Full Thread	.0027 kg
11-5316	M	Steel	Black Zinc	9.32mm	3.00mm	2.63mm	16.00mm	M5 x 0.8	Full Thread	.0027 kg
13-5316	M	Steel	Blue Zinc	9.32mm	3.00mm	2.63mm	16.00mm	M5 x 0.8	Full Thread	.0027 kg
17-5316	M	Stainless-Steel	Stainless	9.32mm	3.00mm	2.63mm	16.00mm	M5 x 0.8	Full Thread	.0027 kg
13-5320	M	Steel	Blue Zinc	9.32mm	3.00mm	2.63mm	20.00mm	M5 x 0.8	Full Thread	.0032 kg
11-6310	M	Steel	Black Zinc	10.29mm	4.00mm	3.15mm	10.00mm	M6 x 1.0	Full Thread	.0032 kg
13-6310	M	Steel	Blue Zinc	10.29mm	4.00mm	3.15mm	10.00mm	M6 x 1.0	Full Thread	.0032 kg
17-6310	M	Stainless-Steel	Stainless	10.29mm	4.00mm	3.15mm	10.00mm	M6 x 1.0	Full Thread	.0032 kg
3802	M	Steel	Bright Zinc	10.29mm	4.00mm	3.15mm	12.00mm	M6 x 1.0	Full Thread	.0059 kg
11-6312	M	Steel	Black Zinc	10.29mm	4.00mm	3.15mm	12.00mm	M6 x 1.0	Full Thread	.0032 kg
13-6312	M	Steel	Blue Zinc	10.29mm	4.00mm	3.15mm	12.00mm	M6 x 1.0	Full Thread	.0032 kg
17-6312	M	Stainless-Steel	Stainless	10.29mm	4.00mm	3.15mm	12.00mm	M6 x 1.0	Full Thread	.0032 kg
19-6312	M	Steel	Bright Zinc	10.29mm	4.00mm	3.15mm	12.00mm	M6 x 1.0	Full Thread	.0032 kg
11-6314	M	Steel	Black Zinc	10.29mm	4.00mm	3.15mm	14.00mm	M6 x 1.0	Full Thread	.0036 kg
3804	M	Steel	Bright Zinc	10.29mm	4.00mm	3.15mm	16.00mm	M6 x 1.0	Full Thread	.0036 kg
11-6316	M	Steel	Black Zinc	10.29mm	4.00mm	3.15mm	16.00mm	M6 x 1.0	Full Thread	.0041 kg
13-6316	M	Steel	Blue Zinc	10.29mm	4.00mm	3.15mm	16.00mm	M6 x 1.0	Full Thread	.0041 kg
17-6316	M	Stainless-Steel	Stainless	10.29mm	4.00mm	3.15mm	16.00mm	M6 x 1.0	Full Thread	.0041 kg
19-6316	M	Steel	Bright Zinc	10.29mm	4.00mm	3.15mm	16.00mm	M6 x 1.0	Full Thread	.0039 kg
11-6318	M	Steel	Black Zinc	10.29mm	4.00mm	3.15mm	18.00mm	M6 x 1.0	Full Thread	.0045 kg
3808	M	Steel	Bright Zinc	10.29mm	4.00mm	3.15mm	20.00mm	M6 x 1.0	Full Thread	.0045 kg
11-6320	M	Steel	Black Zinc	10.29mm	4.00mm	3.15mm	20.00mm	M6 x 1.0	Full Thread	.0045 kg
13-6320	M	Steel	Blue Zinc	10.29mm	4.00mm	3.15mm	20.00mm	M6 x 1.0	Full Thread	.0045 kg
17-6320	M	Stainless-Steel	Stainless	10.29mm	4.00mm	3.15mm	20.00mm	M6 x 1.0	Full Thread	.0045 kg
19-6320	M	Steel	Bright Zinc	10.29mm	4.00mm	3.15mm	20.00mm	M6 x 1.0	Full Thread	.0045 kg
3809	M	Steel	Bright Zinc	10.29mm	4.00mm	3.15mm	25.00mm	M6 x 1.0	Full Thread	.0054 kg
13-6325	M	Steel	Blue Zinc	10.29mm	4.00mm	3.15mm	25.00mm	M6 x 1.0	Full Thread	.0054 kg
19-6325	M	Steel	Bright Zinc	10.29mm	4.00mm	3.15mm	25.00mm	M6 x 1.0	Full Thread	.0054 kg
3811	M	Steel	Bright Zinc	13.79mm	5.00mm	4.23mm	12.00mm	M8 x 1.25	Full Thread	.0064 kg
11-8312	M	Steel	Black Zinc	13.79mm	5.00mm	4.23mm	12.00mm	M8 x 1.25	Full Thread	.0068 kg
13-8312	M	Steel	Blue Zinc	13.79mm	5.00mm	4.23mm	12.00mm	M8 x 1.25	Full Thread	.0068 kg
13-3940	M RT	Steel	Blue Zinc	14.00mm	8.00mm	6.60mm	12.00mm	M8 x 1.25	Full Thread	.0067 kg
17-8312	M	Stainless-Steel	Stainless	13.79mm	5.00mm	4.23mm	12.00mm	M8 x 1.25	Full Thread	.0068 kg
19-8312	M	Steel	Bright Zinc	13.79mm	5.00mm	4.23mm	12.00mm	M8 x 1.25	Full Thread	.0068 kg
3813	M	Steel	Bright Zinc	13.79mm	5.00mm	4.23mm	16.00mm	M8 x 1.25	Full Thread	.0077 kg
11-8316	M	Steel	Black Zinc	13.79mm	5.00mm	4.23mm	16.00mm	M8 x 1.25	Full Thread	.0077 kg
13-8316	M	Steel	Blue Zinc	13.79mm	5.00mm	4.23mm	16.00mm	M8 x 1.25	Full Thread	.0077 kg
17-8316	M	Stainless-Steel	Stainless	13.79mm	5.00mm	4.23mm	16.00mm	M8 x 1.25	Full Thread	.0077 kg
19-8316	M	Steel	Bright Zinc	13.79mm	5.00mm	4.23mm	16.00mm	M8 x 1.25	Full Thread	.0077 kg
11-8318	M	Steel	Black Zinc	13.79mm	5.00mm	4.23mm	18.00mm	M8 x 1.25	Full Thread	.0082 kg
3815	M	Steel	Bright Zinc	13.79mm	5.00mm	4.23mm	20.00mm	M8 x 1.25	Full Thread	.0091 kg
11-8320	M	Steel	Black Zinc	13.79mm	5.00mm	4.23mm	20.00mm	M8 x 1.25	Full Thread	.0092 kg
13-8320	M	Steel	Blue Zinc	13.79mm	5.00mm	4.23mm	20.00mm	M8 x 1.25	Full Thread	.0092 kg
13-3941	M RT	Steel	Blue Zinc	13.79mm	5.00mm	4.23mm	20.00mm	M8 x 1.25	Full Thread	.0092 kg
17-8320	M	Stainless-Steel	Stainless	13.79mm	5.00mm	4.23mm	20.00mm	M8 x 1.25	Full Thread	.0092 kg

View page 3-177 for dimensional drawing

80/20 BUILD YOUR IDEA
More on 80/20® products available at 8020.net

Button Head Socket Cap Screw (Continued)

Part No.	Series	Material	Finish	A	B	C	D (Length)	E (Thread)	Thread Length	Weight
19-8320	M	Steel	Bright Zinc	13.79mm	5.00mm	4.23mm	20.00mm	M8 x 1.25	Full Thread	.0092 kg
3819	M	Steel	Bright Zinc	13.79mm	5.00mm	4.23mm	25.00mm	M8 x 1.25	Full Thread	.0104 kg
11-8325	M	Steel	Black Zinc	13.79mm	5.00mm	4.23mm	25.00mm	M8 x 1.25	Full Thread	.0104 kg
13-8325	M	Steel	Blue Zinc	13.79mm	5.00mm	4.23mm	25.00mm	M8 x 1.25	Full Thread	.0104 kg
17-8325	M	Stainless-Steel	Stainless	13.79mm	5.00mm	4.23mm	25.00mm	M8 x 1.25	Full Thread	.0104 kg
19-8325	M	Steel	Bright Zinc	13.79mm	5.00mm	4.23mm	25.00mm	M8 x 1.25	Full Thread	.0104 kg
13-3943	M RT	Steel	Blue Zinc	14.00mm	8.00mm	6.60mm	30.00mm	M8 x 1.25	Full Thread	.0121 kg
13-3944	M RT	Steel	Blue Zinc	14.00mm	8.00mm	6.60mm	40.00mm	M8 x 1.25	Full Thread	.0154 kg
13-3945	M RT	Steel	Blue Zinc	14.00mm	8.00mm	6.60mm	45.00mm	M8 x 1.25	Full Thread	.0169 kg
13-3946	M RT	Steel	Blue Zinc	14.00mm	8.00mm	6.60mm	50.00mm	M8 x 1.25	Full Thread	.0187 kg
13-3947	M RT	Steel	Blue Zinc	14.00mm	8.00mm	6.60mm	60.00mm	M8 x 1.25	Full Thread	.0217 kg
13-3948	M RT	Steel	Blue Zinc	14.00mm	8.00mm	6.60mm	80.00mm	M8 x 1.25	Full Thread	.0263 kg

View page 3-177 for dimensional drawing

Flanged Button Head Socket Cap Screw

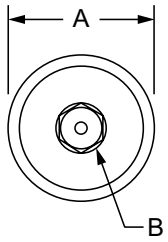

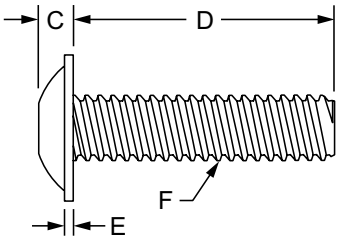

Black Zinc

Stainless Steel

Blue Zinc

Part No.	Series	Material	Finish	A	B	C	D (Length)	E	F (Thread)	Thread Length	Weight
3390	F	Steel	Black Zinc	.560"	5/32	.132"	.375"	.046"	1/4-20	Full Thread	.007 lb
3601	F	Stainless-Steel	Stainless	.560"	5/32	.132"	.375"	.046"	1/4-20	Full Thread	.007 lb
3342	F	Steel	Black Zinc	.560"	5/32	.132"	.500"	.046"	1/4-20	Full Thread	.009 lb
3603	F	Stainless-Steel	Stainless	.560"	5/32	.132"	.500"	.046"	1/4-20	Full Thread	.008 lb
3066	F	Steel	Black Zinc	.560"	5/32	.132"	.750"	.046"	1/4-20	Full Thread	.011 lb
3604	F	Stainless-Steel	Stainless	.560"	5/32	.132"	.750"	.046"	1/4-20	Full Thread	.011 lb
3340	F	Steel	Black Zinc	.660"	3/16	.166"	.500"	.060"	5/16-18	Full Thread	.017 lb
3606	F	Stainless-Steel	Stainless	.660"	3/16	.166"	.500"	.060"	5/16-18	Full Thread	.016 lb
3330	F	Steel	Black Zinc	.660"	3/16	.166"	.687"	.060"	5/16-18	Full Thread	.019 lb
3607	F	Stainless-Steel	Stainless	.660"	3/16	.166"	.687"	.060"	5/16-18	Full Thread	.019 lb
13-6410	M	Steel	Blue Zinc	13.25mm	4.00mm	3.15mm	10.00mm	1.10mm	M6 x 1.0	Full Thread	.0034 kg
17-6410	M	Stainless-Steel	Stainless	13.25mm	4.06mm	3.15mm	10.00mm	1.10mm	M6 x 1.0	Full Thread	.0034 kg
13-6412	M	Steel	Blue Zinc	13.25mm	4.00mm	3.15mm	12.00mm	1.10mm	M6 x 1.0	Full Thread	.0038 kg
17-6412	M	Stainless-Steel	Stainless	13.25mm	4.06mm	3.15mm	12.00mm	1.10mm	M6 x 1.0	Full Thread	.0038 kg
13-6416	M	Steel	Blue Zinc	13.25mm	4.00mm	3.15mm	16.00mm	1.10mm	M6 x 1.0	Full Thread	.0044 kg
17-6416	M	Stainless-Steel	Stainless	13.25mm	4.06mm	3.15mm	16.00mm	1.10mm	M6 x 1.0	Full Thread	.0044 kg
13-8416	M	Steel	Blue Zinc	17.45mm	5.00mm	4.25mm	16.00mm	1.38mm	M8 x 1.25	Full Thread	.0090 kg
17-8416	M	Stainless-Steel	Stainless	17.45mm	5.00mm	4.25mm	16.00mm	1.38mm	M8 x 1.25	Full Thread	.0118 kg
13-8425	M	Steel	Blue Zinc	17.45mm	5.00mm	4.25mm	25.00mm	1.38mm	M8 x 1.25	Full Thread	.0090 kg
17-8425	M	Stainless-Steel	Stainless	17.45mm	5.00mm	4.25mm	25.00mm	1.38mm	M8 x 1.25	Full Thread	.0118 kg

Hardware

Flat Head Socket Cap Screw

Black Zinc/
Black-Coated

Blue-Coated

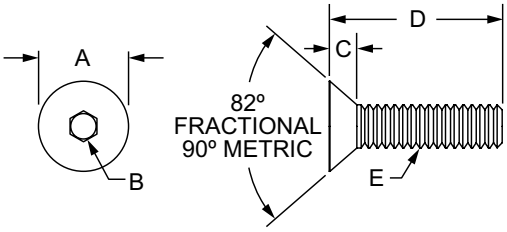

Bright Zinc

Stainless Steel

Part No.	Series	Material	Finish	A	B	C	D (Length)	E (Thread)	Thread Length	Weight
3649	F	Stainless-Steel	Stainless	.335"	3/32	.105"	.250"	8-32	Full Thread	.002 lb
3650	F	Stainless-Steel	Stainless	.385"	1/8	.127"	.375"	10-24	Full Thread	.003 lb
3022	F	Steel	Black Zinc	.385"	1/8	.127"	.500"	10-32	Full Thread	.004 lb
3012	F	Steel	Black Zinc	.506"	5/32	.161"	.375"	1/4-20	Full Thread	.006 lb
3400	F	Steel	Black Zinc	.506"	5/32	.161"	.500"	1/4-20	Full Thread	.009 lb
3645	F	Stainless-Steel	Stainless	.506"	5/32	.161"	.500"	1/4-20	Full Thread	.008 lb
3405	F	Steel	Black Zinc	.506"	5/32	.161"	.625"	1/4-20	Full Thread	.010 lb
3677	F	Stainless-Steel	Stainless	.506"	5/32	.161"	.625"	1/4-20	Full Thread	.009 lb
3406	F	Steel	Black Zinc	.506"	5/32	.161"	.750"	1/4-20	Full Thread	.011 lb
3011	F	Steel	Black Zinc	.628"	3/16	.198"	.500"	5/16-18	Full Thread	.014 lb
3410	F	Steel	Black Zinc	.628"	3/16	.198"	.625"	5/16-18	Full Thread	.017 lb
3411	F	Steel	Black Zinc	.628"	3/16	.198"	.750"	5/16-18	Full Thread	.018 lb
3420	F	Steel	Black Zinc	.751"	7/32	.234"	.750"	3/8-16	Full Thread	.028 lb
11-4710	M	Steel	Black Zinc	8.25mm	2.50mm	2.48mm	10.00mm	M4 x 0.7	Full Thread	.0009 kg
11-4712	M	Steel	Black Zinc	8.25mm	2.50mm	2.48mm	12.00mm	M4 x 0.7	Full Thread	.0014 kg
11-5708	M	Steel	Black Zinc	10.32mm	3.00mm	3.10mm	8.00mm	M5 x 0.8	Full Thread	.0014 kg
11-5710	M	Steel	Black Zinc	10.32mm	3.00mm	3.10mm	10.00mm	M5 x 0.8	Full Thread	.0018 kg
11-5712	M	Steel	Black Zinc	10.32mm	3.00mm	3.10mm	12.00mm	M5 x 0.8	Full Thread	.0018 kg
13-5712	M	Steel	Blue Zinc	10.32mm	3.00mm	3.10mm	12.00mm	M5 x 0.8	Full Thread	.0018 kg
11-5714	M	Steel	Black Zinc	10.32mm	3.00mm	3.10mm	14.00mm	M5 x 0.8	Full Thread	.0027 kg
11-5716	M	Steel	Black Zinc	10.32mm	3.00mm	3.10mm	16.00mm	M5 x 0.8	Full Thread	.0027 kg
13-6710	M	Steel	Blue Zinc	12.39mm	4.00mm	3.72mm	10.00mm	M6 x 1.0	Full Thread	.0023 kg
13-6712	M	Steel	Blue Zinc	12.39mm	4.00mm	3.72mm	12.00mm	M6 x 1.0	Full Thread	.0027 kg
17-6712	M	Stainless-Steel	Stainless	12.39mm	4.00mm	3.72mm	12.00mm	M6 x 1.0	Full Thread	.0032 kg
11-6714	M	Steel	Black Zinc	12.39mm	4.00mm	3.72mm	14.00mm	M6 x 1.0	Full Thread	.0032 kg
11-6716	M	Steel	Black Zinc	12.39mm	4.00mm	3.72mm	16.00mm	M6 x 1.0	Full Thread	.0036 kg
13-6716	M	Steel	Blue Zinc	12.39mm	4.00mm	3.72mm	16.00mm	M6 x 1.0	Full Thread	.0036 kg
11-6718	M	Steel	Black Zinc	12.39mm	4.00mm	3.72mm	18.00mm	M6 x 1.0	Full Thread	.0041 kg
11-6720	M	Steel	Black Zinc	12.39mm	4.00mm	3.72mm	20.00mm	M6 x 1.0	Full Thread	.0041 kg
13-8712	M	Steel	Blue Zinc	16.58mm	5.00mm	4.96mm	12.00mm	M8 x 1.25	Full Thread	.0059 kg
11-8716	M	Steel	Black Zinc	16.58mm	5.00mm	4.96mm	16.00mm	M8 x 1.25	Full Thread	.0073 kg
13-8716	M	Steel	Blue Zinc	16.58mm	5.00mm	4.96mm	16.00mm	M8 x 1.25	Full Thread	.0073 kg
11-8720	M	Steel	Black Zinc	16.58mm	5.00mm	4.96mm	20.00mm	M8 x 1.25	Full Thread	.0082 kg
13-8720	M	Steel	Blue Zinc	16.58mm	5.00mm	4.96mm	20.00mm	M8 x 1.25	Full Thread	.0082 kg
40-3650	40	Stainless-Steel	Stainless	9.78mm	3.18mm	3.23mm	9.53mm	10-24	Full Thread	.0015 kg

80/20 BUILD YOUR IDEA
More on 80/20® products available at 8020.net

Socket Head Cap Screw

Black Zinc/
Black-Coated

Blue Zinc/
Blue-Coated

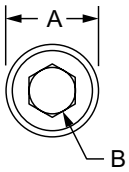

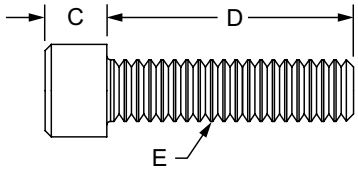

Bright Zinc

Stainless Steel

Part No.	Series	Material	Finish	A	B	C	D (Length)	E (Thread)	Thread Length	Weight
3044	F	Steel	Black Zinc	.308"	5/32	.188"	.375"	10-32	Full Thread	.005 lb
3693	F	Stainless-Steel	Stainless	.308"	5/32	.188"	.375"	10-32	Full Thread	.005 lb
3048	F	Steel	Black Zinc	.308"	5/32	.188"	.500"	10-32	Full Thread	.006 lb
3695	F	Stainless-Steel	Stainless	.308"	5/32	.188"	.500"	10-32	Full Thread	.006 lb
3052	F	Steel	Black Zinc	.308"	5/32	.188"	.625"	10-32	Full Thread	.006 lb
3697	F	Stainless-Steel	Stainless	.308"	5/32	.188"	.625"	10-32	Full Thread	.007 lb
3056	F	Steel	Black Zinc	.308"	5/32	.188"	.750"	10-32	Full Thread	.008 lb
3685	F	Stainless-Steel	Stainless	.308"	5/32	.188"	.750"	10-32	Full Thread	.007 lb
3057	F	Steel	Black Zinc	.308"	5/32	.188"	.875"	10-32	Full Thread	.008 lb
3058	F	Steel	Black Zinc	.370"	3/16	.247"	.375"	1/4-20	Full Thread	.006 lb
3687	F	Stainless-Steel	Stainless	.370"	3/16	.247"	.375"	1/4-20	Full Thread	.006 lb
65-3058	F	Steel	Black Zinc	.370"	3/16	.247"	.375"	1/4-20	Full Thread	.008 lb
3062	F	Steel	Black Zinc	.370"	3/16	.247"	.500"	1/4-20	Full Thread	.011 lb
3689	F	Stainless-Steel	Stainless	.370"	3/16	.247"	.500"	1/4-20	Full Thread	.010 lb
65-3062	F	Steel	Black Zinc	.370"	3/16	.247"	.500"	1/4-20	Full Thread	.011 lb
3067	F	Steel	Black Zinc	.370"	3/16	.247"	.625"	1/4-20	Full Thread	.012 lb
65-3067	F	Steel	Black Zinc	.370"	3/16	.247"	.625"	1/4-20	Full Thread	.009 lb
3064	F	Steel	Black Zinc	.370"	3/16	.247"	.750"	1/4-20	Full Thread	.013 lb
3691	F	Stainless-Steel	Stainless	.370"	3/16	.247"	.750"	1/4-20	Full Thread	.013 lb
65-3064	F	Steel	Black Zinc	.370"	3/16	.247"	.750"	1/4-20	Full Thread	.013 lb
3068	F	Steel	Black Zinc	.370"	3/16	.247"	.875"	1/4-20	Full Thread	.014 lb
3071	F	Steel	Black Zinc	.370"	3/16	.247"	1.000"	1/4-20	Full Thread	.015 lb
3671	F	Stainless-Steel	Stainless	.370"	3/16	.247"	1.000"	1/4-20	Full Thread	.016 lb
65-3071	F	Steel	Black Zinc	.370"	3/16	.247"	1.000"	1/4-20	Full Thread	.015 lb
3072	F	Steel	Black Zinc	.370"	3/16	.247"	1.250"	1/4-20	1.000"	.017 lb
3080	F	Steel	Black Zinc	.370"	3/16	.247"	1.500"	1/4-20	1.000"	.010 lb
3081	F	Steel	Black Zinc	.370"	3/16	.247"	2.125"	1/4-20	1.000"	.030 lb
3082	F	Steel	Black Zinc	.370"	3/16	.247"	2.500"	1/4-20	1.000"	.035 lb
3106	F	Steel	Black Zinc	.463"	1/4	.309"	.500"	5/16-18	Full Thread	.019 lb
3610	F	Stainless-Steel	Stainless	.463"	1/4	.309"	.500"	5/16-18	Full Thread	.019 lb
3950	F RT	Steel	Bright Zinc	.463"	1/4	.309"	.500"	5/16-18	Full Thread	.018 lb
65-3106	F	Steel	Black Zinc	.463"	1/4	.309"	.500"	5/16-18	Full Thread	.019 lb
3110	F	Steel	Black Zinc	.463"	1/4	.309"	.625"	5/16-18	Full Thread	.021 lb
3612	F	Stainless-Steel	Stainless	.463"	1/4	.309"	.625"	5/16-18	Full Thread	.021 lb
65-3110	F	Steel	Black Zinc	.463"	1/4	.309"	.625"	5/16-18	Full Thread	.021 lb
3112	F	Steel	Black Zinc	.463"	1/4	.309"	.750"	5/16-18	Full Thread	.023 lb
3615	F	Stainless-Steel	Stainless	.463"	1/4	.309"	.750"	5/16-18	Full Thread	.023 lb
3951	F RT	Steel	Bright Zinc	.463"	1/4	.309"	.750"	5/16-18	Full Thread	.023 lb
65-3112	F	Steel	Black Zinc	.463"	1/4	.309"	.750"	5/16-18	Full Thread	.023 lb
3119	F	Steel	Black Zinc	.463"	1/4	.309"	.875"	5/16-18	Full Thread	.025 lb
3619	F	Stainless-Steel	Stainless	.463"	1/4	.309"	.875"	5/16-18	Full Thread	.025 lb
3122	F	Steel	Black Zinc	.463"	1/4	.309"	1.000"	5/16-18	Full Thread	.027 lb
3622	F	Stainless-Steel	Stainless	.463"	1/4	.309"	1.000"	5/16-18	Full Thread	.027 lb
3952	F RT	Steel	Bright Zinc	.463"	1/4	.309"	1.000"	5/16-18	Full Thread	.027 lb
65-3122	F	Steel	Black Zinc	.463"	1/4	.309"	1.000"	5/16-18	Full Thread	.027 lb

Hardware

Socket Head Cap Screw (Continued)

Part No.	Series	Material	Finish	A	B	C	D (Length)	E (Thread)	Thread Length	Weight
3627	F	Stainless-Steel	Stainless	.463"	1/4	.309"	1.250"	5/16-18	Full Thread	.032 lb
3953	F RT	Steel	Bright Zinc	.463"	1/4	.309"	1.250"	5/16-18	Full Thread	.031 lb
65-3123	F	Steel	Black Zinc	.463"	1/4	.309"	1.250"	5/16-18	Full Thread	.032 lb
3123	F	Steel	Black Zinc	.463"	1/4	.309"	1.300"	5/16-18	Full Thread	.032 lb
3127	F	Steel	Black Zinc	.463"	1/4	.309"	1.500"	5/16-18	Full Thread	.035 lb
3954	F RT	Steel	Bright Zinc	.463"	1/4	.309"	1.500"	5/16-18	1.125"	.035 lb
3129	F	Steel	Black Zinc	.463"	1/4	.309"	1.750"	5/16-18	1.400"	.042 lb
3955	F RT	Steel	Bright Zinc	.463"	1/4	.309"	1.750"	5/16-18	1.125"	.043 lb
3130	F	Steel	Black Zinc	.463"	1/4	.309"	2.000"	5/16-18	1.650"	.046 lb
3956	F RT	Steel	Bright Zinc	.463"	1/4	.309"	2.000"	5/16-18	1.125"	.046 lb
3131	F	Steel	Black Zinc	.463"	1/4	.309"	2.250"	5/16-18	1.400"	.052 lb
3957	F RT	Steel	Bright Zinc	.463"	1/4	.309"	2.250"	5/16-18	1.125"	.052 lb
3132	F	Steel	Black Zinc	.463"	1/4	.309"	2.500"	5/16-18	1.125"	.056 lb
3133	F	Steel	Black Zinc	.463"	1/4	.309"	3.000"	5/16-18	1.650"	.067 lb
3140	F	Alloy Steel	Black Zinc	.463"	1/4	.309"	3.250"	5/16-18	1.400"	.073 lb
3958	F RT	Steel	Bright Zinc	.463"	1/4	.309"	3.500"	5/16-18	1.125"	.077 lb
3125	F	Steel	Black Zinc	.556"	5/16	.372"	.750"	3/8-16	Full Thread	.037 lb
3124	F	Steel	Black Zinc	.556"	5/16	.372"	1.000"	3/8-16	Full Thread	.049 lb
3128	F	Steel	Black Zinc	.743"	3/8	.496"	1.000"	1/2-13	Full Thread	.091 lb
11-4510	M	Steel	Black Zinc	7.00mm	3.00mm	3.91mm	10.00mm	M4 x 0.7	Full Thread	.0017 kg
11-4512	M	Steel	Black Zinc	7.00mm	3.00mm	3.91mm	12.00mm	M4 x 0.7	Full Thread	.0018 kg
11-4516	M	Steel	Black Zinc	7.00mm	3.00mm	3.91mm	16.00mm	M4 x 0.7	Full Thread	.0023 kg
11-5510	M	Steel	Black Zinc	8.39mm	4.00mm	4.91mm	10.00mm	M5 x 0.8	Full Thread	.0027 kg
13-5510	M	Steel	Blue Zinc	8.39mm	4.00mm	4.91mm	10.00mm	M5 x 0.8	Full Thread	.0027 kg
17-5510	M	Stainless-Steel	Stainless	8.39mm	4.00mm	4.91mm	10.00mm	M5 x 0.8	Full Thread	.0031 kg
11-5512	M	Steel	Black Zinc	8.39mm	4.00mm	4.91mm	12.00mm	M5 x 0.8	Full Thread	.0032 kg
13-5512	M	Steel	Blue Zinc	8.39mm	4.00mm	4.91mm	12.00mm	M5 x 0.8	Full Thread	.0032 kg
17-5512	M	Stainless-Steel	Stainless	8.39mm	4.00mm	4.91mm	12.00mm	M5 x 0.8	Full Thread	.0032 kg
11-5516	M	Steel	Black Zinc	8.39mm	4.00mm	4.91mm	16.00mm	M5 x 0.8	Full Thread	.0036 kg
13-5516	M	Steel	Blue Zinc	8.39mm	4.00mm	4.91mm	16.00mm	M5 x 0.8	Full Thread	.0036 kg
17-5516	M	Stainless-Steel	Stainless	8.39mm	4.00mm	4.91mm	16.00mm	M5 x 0.8	Full Thread	.0036 kg
11-5518	M	Steel	Black Zinc	8.50mm	4.00mm	4.91mm	18.00mm	M5 x 0.8	Full Thread	.0038 kg
13-5518	M	Steel	Blue Zinc	8.50mm	4.00mm	4.91mm	18.00mm	M5 x 0.8	Full Thread	.0038 kg
11-5520	M	Steel	Black Zinc	8.39mm	4.00mm	4.91mm	20.00mm	M5 x 0.8	Full Thread	.0039 kg
13-5520	M	Steel	Blue Zinc	8.39mm	4.00mm	4.91mm	20.00mm	M5 x 0.8	Full Thread	.0039 kg
17-5520	M	Stainless-Steel	Stainless	8.39mm	4.00mm	4.91mm	20.00mm	M5 x 0.8	Full Thread	.0039 kg
13-5525	M	Steel	Blue Zinc	8.50mm	4.00mm	4.91mm	25.00mm	M5 x 0.8	Full Thread	.0046 kg
13-5530	M	Steel	Blue Zinc	8.39mm	4.00mm	4.91mm	30.00mm	M5 x 0.8	22.00mm	.0054 kg
13-6508	M	Steel	Blue Zinc	10.00mm	5.00mm	5.85mm	8.00mm	M6 x 1.0	Full Thread	.0039 kg
11-6510	M	Steel	Black Zinc	9.89mm	5.00mm	5.85mm	10.00mm	M6 x 1.0	Full Thread	.0045 kg
13-6510	M	Steel	Blue Zinc	9.89mm	5.00mm	5.85mm	10.00mm	M6 x 1.0	Full Thread	.0045 kg
17-6510	M	Stainless-Steel	Stainless	9.89mm	5.00mm	5.85mm	10.00mm	M6 x 1.0	Full Thread	.0045 kg
3801	M	Steel	Bright Zinc	9.89mm	5.00mm	5.85mm	12.00mm	M6 x 1.0	Full Thread	.0045 kg
11-6512	M	Steel	Black Zinc	9.89mm	5.00mm	5.85mm	12.00mm	M6 x 1.0	Full Thread	.0045 kg
13-6512	M	Steel	Blue Zinc	9.89mm	5.00mm	5.85mm	12.00mm	M6 x 1.0	Full Thread	.0045 kg
17-6512	M	Stainless-Steel	Stainless	9.89mm	5.00mm	5.85mm	12.00mm	M6 x 1.0	Full Thread	.0045 kg
19-6512	M	Steel	Bright Zinc	9.89mm	5.00mm	5.85mm	12.00mm	M6 x 1.0	Full Thread	.0045 kg
11-6514	M	Steel	Black Zinc	9.89mm	5.00mm	5.85mm	14.00mm	M6 x 1.0	Full Thread	.0053 kg
3803	M	Steel	Bright Zinc	9.89mm	5.00mm	5.85mm	16.00mm	M6 x 1.0	Full Thread	.0054 kg
11-6516	M	Steel	Black Zinc	9.89mm	5.00mm	5.85mm	16.00mm	M6 x 1.0	Full Thread	.0054 kg
13-6516	M	Steel	Blue Zinc	9.89mm	5.00mm	5.85mm	16.00mm	M6 x 1.0	Full Thread	.0054 kg
17-6516	M	Stainless-Steel	Stainless	9.89mm	5.00mm	5.85mm	16.00mm	M6 x 1.0	Full Thread	.0054 kg
19-6516	M	Steel	Bright Zinc	9.89mm	5.00mm	5.85mm	16.00mm	M6 x 1.0	Full Thread	.0054 kg
11-6518	M	Steel	Black Zinc	9.89mm	5.00mm	5.85mm	18.00mm	M6 x 1.0	Full Thread	.0059 kg

View page 3-181 for dimensional drawing

80/20 BUILD YOUR IDEA
More on 80/20® products available at 8020.net

Socket Head Cap Screw (Continued)

Part No.	Series	Material	Finish	A	B	C	D (Length)	E (Thread)	Thread Length	Weight
3806	M	Steel	Bright Zinc	9.89mm	5.00mm	5.85mm	20.00mm	M6 x 1.0	Full Thread	.0059 kg
11-6520	M	Steel	Black Zinc	9.89mm	5.00mm	5.85mm	20.00mm	M6 x 1.0	Full Thread	.0058 kg
13-6520	M	Steel	Blue Zinc	9.89mm	5.00mm	5.85mm	20.00mm	M6 x 1.0	Full Thread	.0058 kg
17-6520	M	Stainless-Steel	Stainless	9.89mm	5.00mm	5.85mm	20.00mm	M6 x 1.0	Full Thread	.0058 kg
19-6520	M	Steel	Bright Zinc	9.89mm	5.00mm	5.85mm	20.00mm	M6 x 1.0	Full Thread	.0058 kg
3807	M	Steel	Bright Zinc	9.89mm	5.00mm	5.85mm	25.00mm	M6 x 1.0	Full Thread	.0064 kg
11-6525	M	Steel	Black Zinc	9.89mm	5.00mm	5.85mm	25.00mm	M6 x 1.0	Full Thread	.0068 kg
13-6525	M	Steel	Blue Zinc	9.89mm	5.00mm	5.85mm	25.00mm	M6 x 1.0	Full Thread	.0068 kg
19-6525	M	Steel	Bright Zinc	9.89mm	5.00mm	5.85mm	25.00mm	M6 x 1.0	Full Thread	.0068 kg
11-6530	M	Steel	Black Zinc	9.89mm	5.00mm	5.85mm	30.00mm	M6 x 1.0	Full Thread	.0077 kg
13-6530	M	Steel	Blue Zinc	9.89mm	5.00mm	5.85mm	30.00mm	M6 x 1.0	Full Thread	.0077 kg
11-6535	M	Steel	Black Zinc	9.89mm	5.00mm	5.85mm	35.00mm	M6 x 1.0	24.00mm	.0090 kg
13-6535	M	Steel	Blue Zinc	9.89mm	5.00mm	5.85mm	35.00mm	M6 x 1.0	24.00mm	.0091 kg
11-6540	M	Steel	Black Zinc	9.89mm	5.00mm	5.85mm	40.00mm	M6 x 1.0	24.00mm	.0104 kg
13-6540	M	Steel	Blue Zinc	9.89mm	5.00mm	5.85mm	40.00mm	M6 x 1.0	24.00mm	.0104 kg
3810	M	Steel	Bright Zinc	12.87mm	6.00mm	7.82mm	12.00mm	M8 x 1.25	Full Thread	.0100 kg
11-8512	M	Steel	Black Zinc	12.87mm	6.00mm	7.82mm	12.00mm	M8 x 1.25	Full Thread	.0100 kg
13-3950	M RT	Steel	Blue Zinc	13.00mm	6.00mm	8.00mm	12.00mm	M8 x 1.25	Full Thread	.0102 kg
13-8512	M	Steel	Blue Zinc	12.87mm	6.00mm	7.82mm	12.00mm	M8 x 1.25	Full Thread	.0100 kg
17-8512	M	Stainless-Steel	Stainless	12.87mm	6.00mm	7.82mm	12.00mm	M8 x 1.25	Full Thread	.0100 kg
19-8512	M	Steel	Bright Zinc	12.87mm	6.00mm	7.82mm	12.00mm	M8 x 1.25	Full Thread	.0100 kg
3812	M	Steel	Bright Zinc	12.87mm	6.00mm	7.82mm	16.00mm	M8 x 1.25	Full Thread	.0113 kg
11-8516	M	Steel	Black Zinc	12.87mm	6.00mm	7.82mm	16.00mm	M8 x 1.25	Full Thread	.0113 kg
13-8516	M	Steel	Blue Zinc	12.87mm	6.00mm	7.82mm	16.00mm	M8 x 1.25	Full Thread	.0113 kg
17-8516	M	Stainless-Steel	Stainless	12.87mm	6.00mm	7.82mm	16.00mm	M8 x 1.25	Full Thread	.0113 kg
19-8516	M	Steel	Bright Zinc	12.87mm	6.00mm	7.82mm	16.00mm	M8 x 1.25	Full Thread	.0113 kg
11-8518	M	Steel	Black Zinc	12.87mm	6.00mm	7.82mm	18.00mm	M8 x 1.25	Full Thread	.0118 kg
13-8518	M	Steel	Blue Zinc	12.87mm	6.00mm	7.82mm	18.00mm	M8 x 1.25	Full Thread	.0118 kg
3814	M	Steel	Bright Zinc	12.87mm	6.00mm	7.82mm	20.00mm	M8 x 1.25	Full Thread	.0126 kg
11-8520	M	Steel	Black Zinc	12.87mm	6.00mm	7.82mm	20.00mm	M8 x 1.25	Full Thread	.0127 kg
13-3951	M RT	Steel	Blue Zinc	13.00mm	6.00mm	8.00mm	20.00mm	M8 x 1.25	Full Thread	.0128 kg
13-8520	M	Steel	Blue Zinc	12.87mm	6.00mm	7.82mm	20.00mm	M8 x 1.25	Full Thread	.0127 kg
17-8520	M	Stainless-Steel	Stainless	12.87mm	6.00mm	7.82mm	20.00mm	M8 x 1.25	Full Thread	.0127 kg
19-8520	M	Steel	Bright Zinc	12.87mm	6.00mm	7.82mm	20.00mm	M8 x 1.25	Full Thread	.0127 kg
13-8522	M	Steel	Blue Zinc	12.87mm	6.00mm	7.82mm	22.00mm	M8 x 1.25	Full Thread	.0132 kg
3818	M	Steel	Bright Zinc	12.87mm	6.00mm	7.82mm	25.00mm	M8 x 1.25	Full Thread	.0145 kg
11-8525	M	Steel	Black Zinc	12.87mm	6.00mm	7.82mm	25.00mm	M8 x 1.25	Full Thread	.0141 kg
13-8525	M	Steel	Blue Zinc	12.87mm	6.00mm	7.82mm	25.00mm	M8 x 1.25	Full Thread	.0141 kg
13-3952	M RT	Steel	Blue Zinc	13.00mm	6.00mm	8.00mm	25.00mm	M8 x 1.25	Full Thread	.0143 kg
17-8525	M	Stainless-Steel	Stainless	12.87mm	6.00mm	7.82mm	25.00mm	M8 x 1.25	Full Thread	.0141 kg
19-8525	M	Steel	Bright Zinc	12.87mm	6.00mm	7.82mm	25.00mm	M8 x 1.25	Full Thread	.0141 kg
3822	M	Steel	Bright Zinc	12.80 mm	6.00mm	7.82mm	30.00mm	M8 x 1.25	Full Thread	.0159 kg
11-8530	M	Steel	Black Zinc	12.87mm	6.00mm	7.82mm	30.00mm	M8 x 1.25	Full Thread	.0159 kg
13-8530	M	Steel	Blue Zinc	12.87mm	6.00mm	7.82mm	30.00mm	M8 x 1.25	Full Thread	.0159 kg
13-3953	M RT	Steel	Blue Zinc	13.00mm	6.00mm	8.00mm	30.00mm	M8 x 1.25	Full Thread	.0156 kg
17-8530	M	Stainless-Steel	Stainless	12.87mm	6.00mm	7.82mm	30.00mm	M8 x 1.25	Full Thread	.0159 kg
19-8530	M	Steel	Bright Zinc	12.87mm	6.00mm	7.82mm	30.00mm	M8 x 1.25	Full Thread	.0159 kg
3839	M	Steel	Bright Zinc	13.00mm	6.00mm	8.00mm	32.00mm	M8 x 1.25	20.00mm	.0200 kg
11-8535	M	Steel	Black Zinc	12.87mm	6.00mm	7.82mm	35.00mm	M8 x 1.25	Full Thread	.0172 kg
13-8535	M	Steel	Blue Zinc	12.87mm	6.00mm	7.82mm	35.00mm	M8 x 1.25	Full Thread	.0172 kg
17-8535	M	Stainless-Steel	Stainless	12.87mm	6.00mm	7.82mm	35.00mm	M8 x 1.25	Full Thread	.0172 kg
11-8540	M	Steel	Black Zinc	12.87mm	6.00mm	7.82mm	40.00mm	M8 x 1.25	28.00mm	.0191 kg
13-8540	M	Steel	Blue Zinc	12.87mm	6.00mm	7.82mm	40.00mm	M8 x 1.25	28.00mm	.0191 kg
13-3954	M RT	Steel	Blue Zinc	13.00mm	6.00mm	8.00mm	40.00mm	M8 x 1.25	28.00mm	.0242 kg

View page 3-181 for dimensional drawing

Hardware

Socket Head Cap Screw (Continued)

Part No.	Series	Material	Finish	A	B	C	D (Length)	E (Thread)	Thread Length	Weight
17-8540	M	Stainless-Steel	Stainless	12.87mm	6.00mm	7.82mm	40.00mm	M8 x 1.25	28.00mm	.0191 kg
13-3955	M RT	Steel	Blue Zinc	13.00mm	6.00mm	8.00mm	45.00mm	M8 x 1.25	28.00mm	.0211 kg
13-8550	M	Steel	Blue Zinc	12.87mm	6.00mm	7.82mm	50.00mm	M8 x 1.25	28.00mm	.0231 kg
13-3956	M RT	Steel	Blue Zinc	13.00mm	6.00mm	8.00mm	50.00mm	M8 x 1.25	28.00mm	.0233 kg
13-3957	M RT	Steel	Blue Zinc	13.00mm	6.00mm	8.00mm	60.00mm	M8 x 1.25	28.00mm	.0272 kg
13-3958	M RT	Steel	Blue Zinc	13.00mm	6.00mm	8.00mm	80.00mm	M8 x 1.25	28.00mm	.0349 kg
13-1520	M	Steel	Blue Zinc	15.87mm	8.00mm	9.82mm	20.00mm	M10 x 1.50	Full Thread	.0218 kg
13-1525	M	Steel	Blue Zinc	15.87mm	8.00mm	9.82mm	25.00mm	M10 x 1.50	Full Thread	.0240 kg

View page 3-181 for dimensional drawing

Low Head Socket Cap Screw

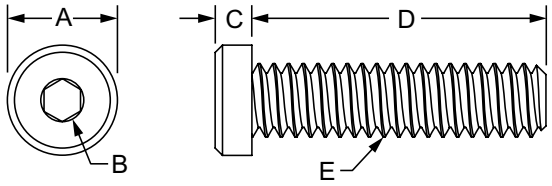

Black Zinc

Blue Zinc

Part No.	Series	Material	Finish	A	B	C	D (Length)	E (Thread)	Thread Length	Weight
3017	F	Steel	Black Zinc	.372"	1/8	.124"	1.000"	1/4-20	Full Thread	.013 lb
3018	F		Black Zinc	.434"	5/32	.155"	1.250"	5/16-18	Full Thread	.026 lb
13-1993	M		Blue Zinc	10.00mm	5.00mm	4.00mm	10.00mm	M6 x 1.0	Full Thread	.0036 kg
13-1957	M		Blue Zinc	13.00mm	6.00mm	5.00mm	16.00mm	M8 x 1.25	Full Thread	.0090 kg
11-2525	M		Black Zinc	18.00mm	8.00mm	8.00mm	25.00mm	M12 x 1.75	Full Thread	.0279 kg

Connecting Screw

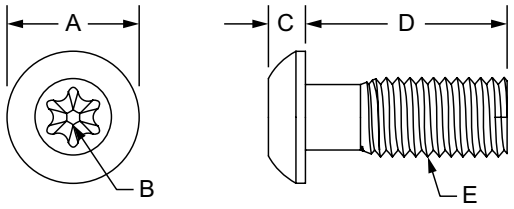

Bright Zinc

Part No.	Series	Material	Finish	A	B	C	D (Length)	E (Thread)	Thread Length	Weight
13003	M	Steel	Bright Zinc	19.50mm	8.00mm HEX	6.00mm	30.00mm	M12 x 1.75	23.00mm	.0277 kg
13006*	M			20.00mm	T-50	6.00mm	30.00mm	M10.6 x 1.5*	23.00mm	.0249 kg
13004	M			20.00mm	T-50	6.00mm	30.00mm	M12 x 1.75	22.25mm	.0281 kg

* Tri-Lobe Thread Forming Screw

80/20 BUILD YOUR IDEA
More on 80/20® products available at 8020.net

Flanged Hex Head Bolt

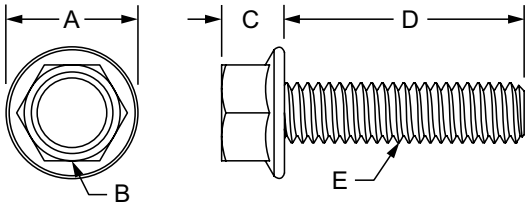

Bright Zinc

Part No.	Series	Material	Finish	A	B	C	D (Length)	E (Thread)	Thread Length	Weight
3747				.680"	1/2	.320"	.500"	5/16-18	Full Thread	.025 lb
3748				.680"	1/2	.320"	.750"	5/16-18	Full Thread	.027 lb
3749				.680"	1/2	.320"	1.000"	5/16-18	Full Thread	.029 lb
3750				.680"	1/2	.320"	1.250"	5/16-18	Full Thread	.038 lb
3751	F RT	Steel	Bright Zinc	.680"	1/2	.320"	1.500"	5/16-18	Full Thread	.043 lb
3752				.680"	1/2	.320"	1.750"	5/16-18	Full Thread	.044 lb
3753				.680"	1/2	.320"	2.000"	5/16-18	Full Thread	.049 lb
3754				.680"	1/2	.320"	2.250"	5/16-18	Full Thread	.052 lb
3755				.680"	1/2	.320"	3.500"	5/16-18	Full Thread	.075 lb
13-3753	M	Steel	Bright Blue Zinc	17.40mm	12.00mm	8.10mm	50.00mm	M8 x 1.25	22.00mm	.0249 kg

Self Tapping Screw

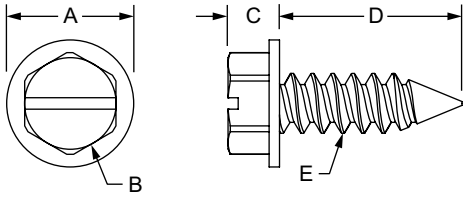

Bright Zinc

Part No.	Series	Material	Finish	A	B	C	D (Length)	E (Thread)	Weight
9320	F	Steel	Bright Zinc	.500"	1/4	.141"	.500"	#8-18	.003 lb
9301	F			.350"	1/4	.141"	.625"	#8-18	.003 lb
9306	F			.500"	3/8	.240"	.625"	1/4-14	.010 lb

Self Drilling Screw

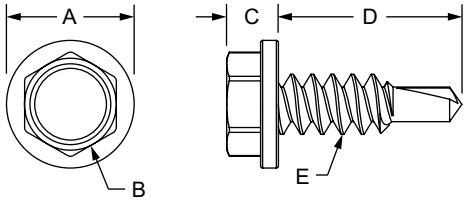

Bright Zinc

Part No.	Series	Material	Finish	A	B	C	D (Length)	E (Thread)	Weight
9325	F	Steel	Bright Zinc	.350"	1/4	.141"	.500"	#8-18	.003 lb
9302	F			.350"	1/4	.141"	.675"	#8-18	.003 lb
9307	F			.500"	3/8	.240"	.750"	1/4-14	.013 lb

Hardware

Threaded Insert

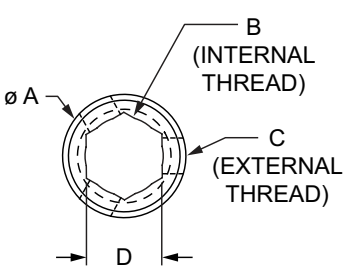

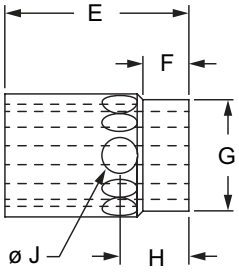

Part No.	Series	Material	Finish	Process	A	B (Thread)	C (Thread)	D	E (Length)	F	G	H	J	Weight
14196	M	Steel	Bright Zinc	Metal Forming	10.70mm	M8 x 1.25	10.70mm	6.60mm	16.00mm	4.00mm	9.70mm	6.00mm	3.10mm	.0039 kg

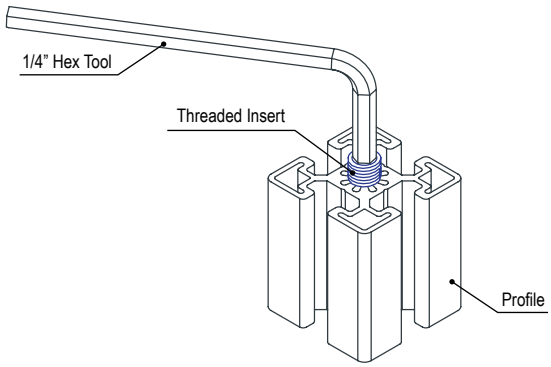

Bearing Pad Screw

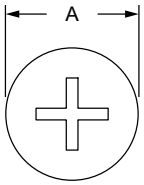

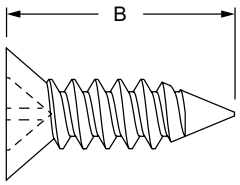

Part No.	Series	Material	Finish	Process	A	B (Length)	Standard Size	Weight
3625	10	Stainless-Steel	Stainless	Formed	.332"	.375"	#8 FHS	.001 lb
3626	10				.332"	.500"	#8 FHS	.002 lb
3628	15				.362"	.625"	#10 FHS	.003 lb
25-3625	25				8.43mm	9.53mm	#8 FHS	.0008 kg
25-3626	25				8.43mm	12.70mm	#8 FHS	.0012 kg
40-3628	40				9.19mm	15.88mm	#10 FHS	.0015 kg
40-3629	40				9.19mm	19.05mm	#10 FHS	.0020 kg

80/20 BUILD YOUR IDEA
More on 80/20® products available at 8020.net

Shoulder Bolt

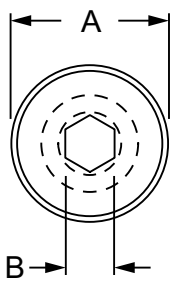

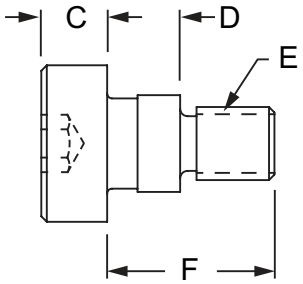

Part No.	Series	Material	Finish	A	B	C	D	E (Thread)	F	Weight
13-2247	M	Steel	Black Zinc	13.00mm	4.00mm	5.50mm	6.00mm	M6 x 1.0	14.00mm	.0100 kg
13-1914	M			13.00mm	4.00mm	5.50mm	12.00mm	M6 x 1.0	23.25mm	.0116 kg
13-1922	M			16.00mm	5.00mm	7.00mm	20.00mm	M8 x 1.25	33.25mm	.0255 kg

Shoulder Bolt with Washer

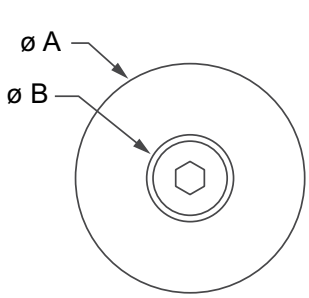

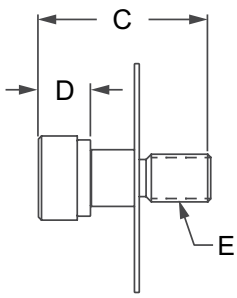

Part No.	Series	Bolt Material	Bolt Finish	Washer Material	Washer Finish	A	B	C	D	E (Thread)	Weight
3501	10	Steel	Black Zinc	Plastic	White Nylon	1.000"	.435"	.759"	.246"	1/4-20	.073 lb
3500	15					1.500"	.552"	1.109"	.341"	5/16-18	.035 lb
25-3501	25					25.40mm	13.84mm	19.16mm	6.98mm	M6 X 1.0	.018 kg
40-3500	40					38.10mm	19.23mm	30.25mm	10.18mm	M8 X 1.25	.064 kg

*Assembly comprised of (2) Shoulder Bolts and (4) Plastic Washers

Hardware

Washer

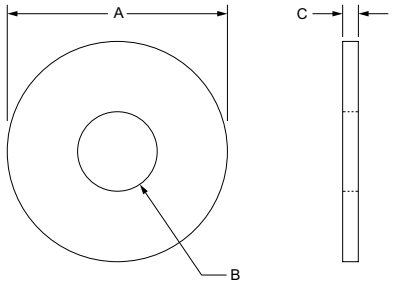

Part No.	Series	Material	Finish	Type	Mfg Standard	A	B	C	Weight
3006	F	Steel	Black Zinc	SAE Flat	ANSI B18.22.1	.438"	.188"	.049"	.001 lb
3055	F	Steel	Black Zinc	SAE Flat	ANSI B18.22.1	.505"	.221"	.051"	.002 lb
3258	F	Steel	Black Zinc	SAE Flat	ANSI B18.22.1	.625"	.286"	.066"	.004 lb
3260	F	Steel	Black Zinc	SAE Flat	ANSI B18.22.1	.692"	.349"	.066"	.004 lb
3261	F	Steel	Black Zinc	SAE Flat	ANSI B18.22.1	.816"	.410"	.066"	.006 lb
3262	F	Steel	Black Zinc	SAE Flat	ANSI B18.22.1	1.062"	.531"	.095"	.015 lb
3760	F RT	Steel	Bright Zinc	SAE Flat	ANSI B18.22.1	.692"	.349"	.066"	.006 lb
3762	F	Steel	Bright Zinc	SAE Flat	ANSI B18.22.1	1.000"	.449"	.068"	.013 lb
3764	F	Steel	Bright Zinc	SAE Flat	ANSI B18.22.1	1.387"	.567"	.109"	.038 lb
3658	F	Stainless-Steel	Stainless	SAE Flat	ANSI B18.22.1	.625"	.286"	.066"	.004 lb
3659	F	Stainless-Steel	Stainless	Standard Flat	ISO 7089	.692"	.345"	.045"	.004 lb
3861	F	Steel	Bright Zinc	Standard Flat	ISO 7089	.464"	.256"	.063"	.001 lb
3860	F RT	Steel	Bright Zinc	Standard Flat	ISO 7089	.621"	.335"	.063"	.003 lb
13-6040	M	Steel	Blue Zinc	Standard Flat	ISO 7089	9.82mm	5.39mm	1.00mm	.0004 kg
13-6041	M	Steel	Blue Zinc	Standard Flat	ISO 7089	11.78mm	6.51mm	1.60mm	.0008 kg
13-6045	M	Steel	Blue Zinc	Standard Flat	DIN 7349	13.00mm	6.87mm	2.70mm	.0022 kg
13-6042	M	Steel	Blue Zinc	Standard Flat	ISO 7089	15.78mm	8.51mm	1.60mm	.0018 kg
13-6043	M	Steel	Blue Zinc	Standard Flat	ISO 7089	19.74mm	10.63mm	2.00mm	.0033 kg
13-6044	M	Steel	Blue Zinc	Standard Flat	ISO 7089	26.25mm	14.25mm	4.00mm	.0109 kg
11-6039	M	Steel	Black Zinc	Standard Flat	ISO 7089	8.82mm	4.39mm	0.80mm	.0003 kg
11-6040	M	Steel	Black Zinc	Standard Flat	ISO 7089	9.60mm	5.30mm	1.00mm	.0004 kg
11-6041	M	Steel	Black Zinc	Standard Flat	ISO 7089	11.78mm	6.51mm	1.60mm	.0009 kg
11-6042	M	Steel	Black Zinc	Standard Flat	ISO 7089	15.78mm	8.51mm	1.60mm	.0013 kg
17-6041	M	Stainless-Steel	Stainless	Standard Flat	ISO 7089	11.78mm	6.51mm	1.60mm	.0009 kg
17-6042	M	Stainless-Steel	Stainless	Standard Flat	ISO 7089	15.78mm	8.51mm	1.60mm	.0013 kg
19-6041	M	Steel	Bright Zinc	Standard Flat	ISO 7089	11.78mm	6.51mm	1.60mm	.0009 kg
19-6042	M	Steel	Bright Zinc	Standard Flat	ISO 7089	15.78mm	8.51mm	1.60mm	.0018 kg
25-3502	M	Plastic	White Nylon	—	—	13.84mm	9.22mm	1.27mm	.0001 kg
25-3503	M	Plastic	White Nylon	—	—	13.84mm	9.22mm	2.01mm	.0002 kg
40-3503	M	Plastic	White Nylon	—	—	19.48mm	10.26mm	4.01mm	.0009 kg
65-3258	M	Steel	Black Zinc	SAE Flat	ANSI B18.22.1	16.00mm	7.40mm	1.52mm	.0015 kg
65-3260	M	Steel	Black Zinc	SAE Flat	ANSI B18.22.1	17.35mm	8.86mm	1.66mm	.0018 kg

80/20 BUILD YOUR IDEA
More on 80/20® products available at 8020.net

Hex Nut

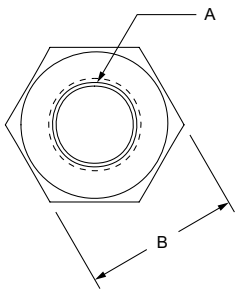

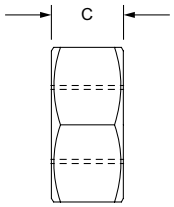

Part No.	Series	Material	Finish	Type	Mfg Standard	A (Thread)	B	C	Weight
3007	F	Steel	Black Zinc	Finished Hex Nut	ANSI/ASME B18.2.2	8-32	.338"	.123"	.002 lb
3053	F	Steel	Black Zinc	Machine Screw	ANSI/ASME B18.6.3	10-32	.368"	.123"	.003 lb
3208	F	Steel	Black Zinc	Finished Hex Nut	ANSI/ASME B18.2.2	1/4-20	.433"	.219"	.007 lb
3214	F	Steel	Black Zinc	Finished Hex Nut	ANSI/ASME B18.2.2	5/16-18	.494"	.265"	.010 lb
3215	F	Steel	Black Zinc	Finished Hex Nut	ANSI/ASME B18.2.2	3/8 - 16	.563"	.328"	.015 lb
3714	F	Steel	Bright Zinc	Finished Hex Nut	ANSI/ASME B18.2.2	5/16-18	.494"	.265"	.010 lb
3709	F	Steel	Bright Zinc	Finished Hex Nut	ANSI/ASME B18.2.2	1/2-13	.743"	.437"	.035 lb
3656	F	Stainless-Steel	Stainless	Finished Hex Nut	ANSI/ASME B18.2.2	1/4-20	.433"	.219"	.007 lb
3657	F	Stainless-Steel	Stainless	Finished Hex Nut	ANSI/ASME B18.2.2	5/16-18	.494"	.265"	.010 lb
3820	F	Steel	Bright Zinc	Hex Nut	DIN 934	M6 x 1.0	.389"	.191"	.005 lb
3821	F	Steel	Bright Zinc	Hex Nut	DIN 934	M8 x 1.25	.506"	.248"	.010 lb
13-5065	M	Steel	Blue Zinc	Hex Nut	DIN 934	M5 x 0.8	7.89mm	3.95mm	.0010 kg
13-6065	M	Steel	Blue Zinc	Hex Nut	DIN 934	M6 x 1.0	9.89mm	4.85mm	.0022 kg
13-8065	M	Steel	Blue Zinc	Hex Nut	DIN 934	M8 x 1.25	12.86mm	6.32mm	.0045 kg
13-2065	M	Steel	Blue Zinc	Hex Nut	ISO 4033	M12 x 1.75	17.86mm	11.78mm	.0086 kg
11-4065	M	Steel	Black Zinc	Hex Nut	DIN 934	M4 x 0.7	6.89mm	3.10mm	.0007 kg
11-5065	M	Steel	Black Zinc	Hex Nut	DIN 934	M5 x 0.8	7.89mm	3.85mm	.0010 kg
11-6065	M	Steel	Black Zinc	Hex Nut	DIN 934	M6 x 1.0	9.89mm	4.85mm	.0022 kg
11-8065	M	Steel	Black Zinc	Hex Nut	DIN 934	M8 x 1.25	12.86mm	6.32mm	.0045 kg
17-6065	M	Stainless-Steel	Stainless	Hex Nut	DIN 934	M6 x 1.0	9.89mm	4.85mm	.0022 kg
19-6065	M	Steel	Bright Zinc	Hex Nut	DIN 934	M6 x 1.0	9.89mm	4.85mm	.0022 kg
19-8065	M	Steel	Bright Zinc	Hex Nut	DIN 934	M8 x 1.25	12.86mm	6.32mm	.0045 kg
19-1065	M	Steel	Bright Zinc	Hex Nut	DIN 934	M10 x 1.5	16.87mm	7.82mm	.0104 kg
19-2065	M	Steel	Bright Zinc	Hex Nut	DIN 934	M12 x 1.75	19.00mm	10.00mm	.0151 kg
65-3208	M	Steel	Black Zinc	Finished Hex Nut	ANSI/ASME B18.2.2	1/4-20	10.90mm	5.45mm	.0031 kg
65-3214	M	Steel	Black Zinc	Finished Hex Nut	ANSI/ASME B18.2.2	5/16-18	12.50mm	6.70mm	.0045 kg

Hardware

Flanged Hex Head Nut

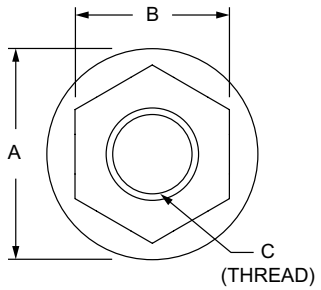

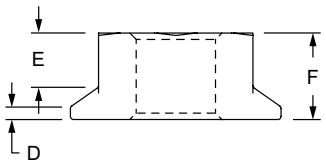

Part No.	Series	Material	Grade	Finish	Nylock	A	B	C (Thread)	D	E	F	Weight
3758	F RT	Steel	Class 8	Bright Zinc	No	.670"	.500"	5/16-18	.040"	.170"	.275"	.013 lb
3759	F RT			Bright Zinc		.670"	.500"	5/16-18	.040"	.170"	.275"	.013 lb
14156	M			Bright Blue Zinc		14.20mm	10.00mm	M6 x 1.0	1.10mm	3.10mm	6.00mm	.0034 kg
13-3758	M RT			Bright Blue Zinc		17.90mm	13.00mm	M8 x 1.25	1.20mm	4.50mm	8.00mm	.0071 kg
13-3759	M RT			Bright Blue Zinc		17.90mm	13.00mm	M8 x 1.25	1.20mm	4.50mm	8.00mm	.0073 kg

80/20 BUILD YOUR IDEA
More on 80/20® products available at 8020.net

Slide-In Flanged Economy T-slot Stud

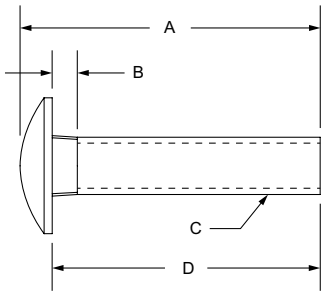

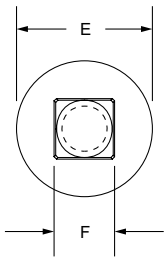

Part No.	Series	Material	Finish	A	B	C (Thread)	D (Length)	E	F	Weight
3115	10	Steel	Black Zinc	.875"	.140"	1/4-20	.750"	.500"	.235"	.013 lb
3116	15	Steel	Black Zinc	.898"	.135"	5/16-18	.750"	.700"	.308"	.025 lb
3851	15	Steel	Bright Zinc	.945"	.135"	M8 x 1.25	.787"	.700"	.308"	.027 lb
3120	15	Steel	Black Zinc	1.153"	.135"	5/16-18	1.000"	.700"	.308"	.031 lb
3852	15	Steel	Bright Zinc	1.145"	.135"	M8 x 1.25	.984"	.700"	.308"	.030 lb
3126	15	Steel	Black Zinc	1.405"	.135"	5/16-18	1.250"	.700"	.308"	.034 lb
3853	15	Steel	Bright Zinc	1.350"	.135"	M8 x 1.25	1.181"	.700"	.308"	.033 lb
3134	15	Steel	Black Zinc	1.650"	.135"	5/16-18	1.500"	.700"	.308"	.037 lb
3854	15	Steel	Bright Zinc	1.530"	.135"	M8 x 1.25	1.378"	.700"	.308"	.038 lb
3288	15	Steel	Black Zinc	1.905"	.135"	5/16-18	1.750"	.700"	.308"	.042 lb
3857	15	Steel	Bright Zinc	1.920"	.135"	M8 x 1.25	1.772"	.700"	.308"	.045 lb
3290	15	Steel	Black Zinc	2.145"	.135"	5/16-18	2.000"	.700"	.308"	.046 lb
19-8920	40	Steel	Bright Zinc	23.90mm	3.50mm	M8 x 1.25	20.00mm	17.75mm	7.80mm	.0126 kg
19-8925	40	Steel	Bright Zinc	29.00mm	3.50mm	M8 x 1.25	25.00mm	17.75mm	7.80mm	.0137 kg
19-8930	40	Steel	Bright Zinc	34.50mm	3.50mm	M8 x 1.25	30.00mm	17.75mm	7.80mm	.0149 kg
19-8935	40	Steel	Bright Zinc	38.90mm	3.50mm	M8 x 1.25	35.00mm	17.75mm	7.80mm	.0172 kg
19-8945	40	Steel	Bright Zinc	49.00mm	3.50mm	M8 x 1.25	45.00mm	17.75mm	7.80mm	.0202 kg
40-3116	40	Steel	Black Zinc	22.75mm	3.50mm	5/16-18	19.05mm	17.75mm	7.80mm	.0116 kg
40-3120	40	Steel	Black Zinc	29.00mm	3.50mm	5/16-18	25.40mm	17.75mm	7.80mm	.0134 kg
40-3126	40	Steel	Black Zinc	35.75mm	3.50mm	5/16-18	31.75mm	17.75mm	7.80mm	.0149 kg
40-3134	40	Steel	Black Zinc	42.00mm	3.50mm	5/16-18	38.10mm	17.75mm	7.80mm	.0172 kg
40-3290	40	Steel	Black Zinc	54.75mm	3.50mm	5/16-18	50.80mm	17.75mm	7.80mm	.0209 kg

Slide-In Economy T-slot Stud

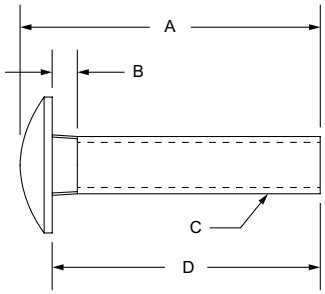

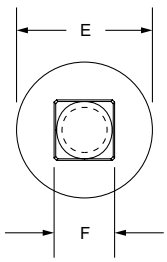

Part No.	Series	Material	Finish	A	B	C (Thread)	D (Length)	E	F	Weight
3716	15	Steel	Bright Zinc	.910"	.160"	5/16-18	.750"	.695"	.310"	.026 lb
3720	15			1.160"	.160"	5/16-18	1.000"	.695"	.310"	.029 lb

Hardware

Drop-In T-slot Stud Assembly

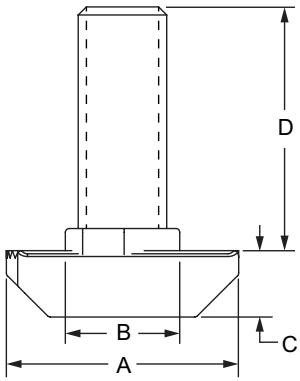

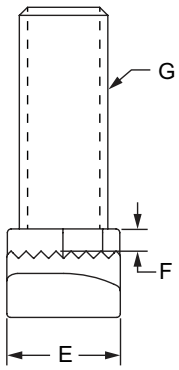

Part No.	Series	Material	Finish	A	B	C	D (Length)	E	F	G (Thread)	Weight
13135	30	Stainless-Steel	Stainless	16.00mm	7.70mm	4.50mm	20.00mm	7.70mm	1.50mm	M6 x 1.0	.0076 kg
13137	30	Stainless-Steel	Stainless	16.00mm	7.70mm	4.50mm	25.00mm	7.70mm	1.50mm	M6 x 1.0	.0082 kg
13139	30	Stainless-Steel	Stainless	16.00mm	7.70mm	4.50mm	30.00mm	7.70mm	1.50mm	M6 x 1.0	.0095 kg
13141	30	Stainless-Steel	Stainless	16.00mm	7.70mm	4.50mm	40.00mm	7.70mm	1.50mm	M6 x 1.0	.0112 kg
13143	30	Stainless-Steel	Stainless	16.00mm	7.70mm	4.50mm	60.00mm	7.70mm	1.50mm	M6 x 1.0	.0147 kg
13134	30	Steel	Bright Zinc	16.00mm	7.70mm	4.50mm	20.00mm	7.70mm	1.50mm	M6 x 1.0	.0073 kg
13136	30	Steel	Bright Zinc	16.00mm	7.70mm	4.50mm	25.00mm	7.70mm	1.50mm	M6 x 1.0	.0078 kg
13138	30	Steel	Bright Zinc	16.00mm	7.70mm	4.50mm	30.00mm	7.70mm	1.50mm	M6 x 1.0	.0093 kg
13140	30	Steel	Bright Zinc	16.00mm	7.70mm	4.50mm	40.00mm	7.70mm	1.50mm	M6 x 1.0	.0104 kg
13142	30	Steel	Bright Zinc	16.00mm	7.70mm	4.50mm	60.00mm	7.70mm	1.50mm	M6 x 1.0	.0138 kg
13144	15 40	Steel	Bright Zinc	15.75mm	7.75mm	4.50mm	20.00mm	7.80mm	3.00mm	M6 x 1.0	.0075 kg
13145	15 40	Steel	Bright Zinc	15.75mm	7.75mm	4.50mm	25.00mm	7.80mm	3.00mm	M6 x 1.0	.0083 kg
13146	15 40	Steel	Bright Zinc	15.75mm	7.75mm	4.50mm	30.00mm	7.80mm	3.00mm	M6 x 1.0	.0093 kg
13147	15 40	Steel	Bright Zinc	15.75mm	7.75mm	4.50mm	40.00mm	7.80mm	3.00mm	M6 x 1.0	.0108 kg
13148	15 40	Steel	Bright Zinc	15.75mm	7.75mm	4.50mm	60.00mm	7.80mm	3.00mm	M6 x 1.0	.0147 kg
13169	45	Steel	Bright Zinc	19.00mm	9.70mm	5.80mm	20.00mm	9.70mm	3.00mm	M8 x 1.25	.0132 kg
13171	45	Steel	Bright Zinc	19.00mm	9.70mm	5.80mm	25.00mm	9.70mm	3.00mm	M8 x 1.25	.0146 kg
13173	45	Steel	Bright Zinc	19.00mm	9.70mm	5.80mm	30.00mm	9.70mm	3.00mm	M8 x 1.25	.0159 kg
13175	45	Steel	Bright Zinc	19.00mm	9.70mm	5.80mm	40.00mm	9.70mm	3.00mm	M8 x 1.25	.0187 kg
13177	45	Steel	Bright Zinc	19.00mm	9.70mm	5.80mm	60.00mm	9.70mm	3.00mm	M8 x 1.25	.0253 kg
13170	45	Stainless-Steel	Stainless	19.00mm	9.70mm	5.80mm	20.00mm	9.70mm	3.00mm	M8 x 1.25	.0136 kg
13172	45	Stainless-Steel	Stainless	19.00mm	9.70mm	5.80mm	25.00mm	9.70mm	3.00mm	M8 x 1.25	.0106 kg
13174	45	Stainless-Steel	Stainless	19.00mm	9.70mm	5.80mm	30.00mm	9.70mm	3.00mm	M8 x 1.25	.0154 kg
13176	45	Stainless-Steel	Stainless	19.00mm	9.70mm	5.80mm	40.00mm	9.70mm	3.00mm	M8 x 1.25	.0191 kg
13178	45	Stainless-Steel	Stainless	19.00mm	9.70mm	5.80mm	60.00mm	9.70mm	3.00mm	M8 x 1.25	.0258 kg

80/20 BUILD YOUR IDEA
More on 80/20® products available at 8020.net

Drop-In T-slot Stud

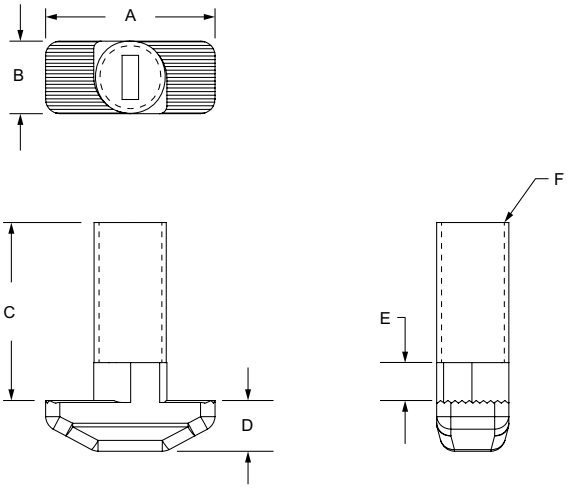

Part No.	Series	Material	Finish	A	B	C (Length)	D	E	F (Thread)	Weight
3293	15	Steel	Black Zinc	.713"	.305"	.750"	.213"	.160"	5/16-18	.024 lb
3295	15			.713"	.305"	1.000"	.213"	.160"	5/16-18	.027 lb
3297	15			.713"	.305"	1.250"	.213"	.160"	5/16-18	.032 lb
3299	15			.713"	.305"	1.500"	.213"	.160"	5/16-18	.036 lb

Drop-In T-slot Stud with Flanged Hex Nut

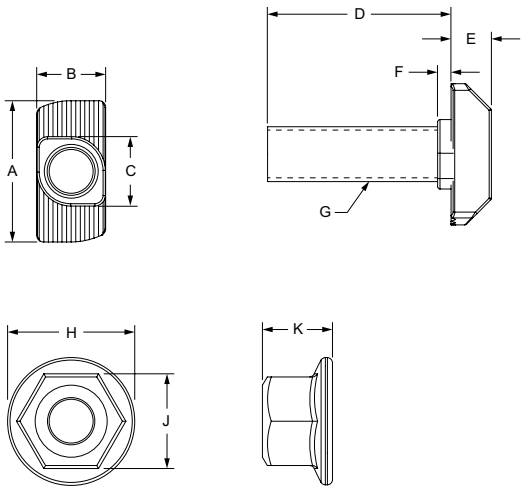

Part No.	Series	Material	Finish	A	B	C	D	E	F	G	H	J	K	Weight
75-3633	30	Steel	Bright / Blue Zinc	15.75mm	7.75mm	7.80mm	20.00mm	4.50mm	1.50mm	M6 x 1.0	14.20mm	9.89mm	5.85mm	.0104 kg
75-3636	30			16.00mm	7.70mm	7.70mm	25.00mm	4.50mm	1.50mm	M6 x 1.0	14.20mm	9.89mm	5.85mm	.0109 kg
75-3637	30			16.00mm	7.70mm	7.70mm	30.00mm	4.50mm	1.50mm	M6 x 1.0	14.20mm	9.89mm	5.85mm	.0123 kg
75-3632	45			19.00mm	9.70mm	9.70mm	20.00mm	5.80mm	3.00mm	M8 x 1.25	17.90mm	13.00mm	7.80mm	.0203 kg
75-3635	45			19.00mm	9.70mm	9.70mm	25.00mm	5.80mm	3.00mm	M8 x 1.25	17.90mm	13.00mm	7.80mm	.0260 kg
75-3638	45			19.00mm	9.70mm	9.70mm	30.00mm	5.80mm	3.00mm	M8 x 1.25	17.90mm	13.00mm	7.80mm	.0072 kg

Hardware

Bolt Assemblies

1/4-20 Button Head Socket Cap Screw (BHSCS)

Assy. No.	Bolt	Qty.	Bolt Type	Thread Size	Bolt Length	Nut	Qty.	Nut Type	Washer	Qty.	Weight
3520	3059	1	BHSCS	1/4-20	.375"	3376	1	Roll-In T-Nut with Flex Handle	—	—	.015 lb
3416	3059	1			.375"	3382	1	Slide-In Economy T-Nut - Centered Thread	—	—	.026 lb
3394	3061	1			.500"	3376	1	Roll-In T-Nut with Flex Handle	—	—	.021 lb
3399	3061	1			.500"	3376	1	Roll-In T-Nut with Flex Handle	3258	1	.020 lb
75-3801	3061	1			.500"	3376	1	Roll-In T-Nut with Flex Handle	—	—	.016 lb
75-3807	3061	1			.500"	3376	1	Roll-In T-Nut with Flex Handle	3258	1	.020 lb
3521	3061	1			.500"	3376	1	Roll-In T-Nut with Flex Handle	—	—	.016 lb
3393	3061	1			.500"	3382	1	Slide-In Economy T-Nut - Centered Thread	—	—	.017 lb
3398	3061	1			.500"	3382	1	Slide-In Economy T-Nut - Centered Thread	3258	1	.021 lb
75-3800	3061	1			.500"	3382	1	Slide-In Economy T-Nut - Centered Thread	—	—	.017 lb
75-3806	3061	1			.500"	3382	1	Slide-In Economy T-Nut - Centered Thread	3258	1	.021 lb
3408	3061	1			.500"	14165	1	Standard Drop-In T-Nut	—	—	.016 lb
3484	3063	1			.625"	3376	1	Roll-In T-Nut with Flex Handle	3258	1	.020 lb
75-3803	3063	1			.625"	3376	1	Roll-In T-Nut with Flex Handle	—	—	.017 lb
75-3809	3063	1			.625"	3376	1	Roll-In T-Nut with Flex Handle	3258	1	.020 lb
3522	3063	1			.625"	3376	1	Roll-In T-Nut with Flex Handle	—	—	.018 lb
3418	3063	1			.625"	3286	1	Slide-In Economy T-Nut - Centered Thread	—	—	.018 lb
3482	3063	1			.625"	3382	1	Slide-In Economy T-Nut - Centered Thread	3258	1	.022 lb
3647*	3663	1			.625"	3686	1	Slide-In Economy T-Nut - Centered Thread	3658	1	.025 lb
75-3802	3063	1			.625"	3382	1	Slide-In Economy T-Nut - Centered Thread	—	—	.018 lb
75-3808	3063	1			.625"	3382	1	Slide-In Economy T-Nut - Centered Thread	3258	1	.022 lb
3367	3063	1			.625"	—	—	—	3258	1	.012 lb
3469	3065	1			.750"	3208	1	Hex Nut	3258	1	.020 lb
3372	3065	1			.750"	3376	1	Roll-In T-Nut with Flex Handle	3258	1	.021 lb
75-3805	3065	1			.750"	3376	1	Roll-In T-Nut with Flex Handle	—	—	.019 lb
75-3811	3065	1			.750"	3376	1	Roll-In T-Nut with Flex Handle	3258	1	.021 lb
3523	3065	1			.750"	3376	1	Roll-In T-Nut with Flex Handle	—	—	.018 lb
3371	3065	1			.750"	3382	1	Slide-In Economy T-Nut - Centered Thread	3258	1	.036 lb
75-3804	3065	1			.750"	3382	1	Slide-In Economy T-Nut - Centered Thread	—	—	.020 lb
75-3810	3065	1			.750"	3382	1	Slide-In Economy T-Nut - Centered Thread	3258	1	.023 lb
3479	3065	1			.750"	3204	1	Standard Slide-In T-Nut	—	—	.018 lb
3388	3065	1			.750"	—	—	—	3258	1	.014 lb

*Assembly comprised of stainless steel (SS) hardware

1/4-20 Flanged Button Head Socket Cap Screw (FBHSCS)

Assy. No.	Bolt	Qty.	Bolt Type	Thread Size	Bolt Length	Nut	Qty.	Nut Type	Washer	Qty.	Weight
3002	3390	2	FBHSCS	1/4-20	.375"	3280	1	Double Slide-In Economy T-Nut	—	—	.034 lb
3387	3390	1			.375"	3376	1	Roll-In T-Nut with Flex Handle	—	—	.015 lb
3480	3390	1			.375"	3376	1	Roll-In T-Nut with Flex Handle	—	—	.015 lb
3386	3390	1			.375"	3382	1	Slide-In Economy T-Nut - Centered Thread	—	—	.016 lb
3356	3342	2			.500"	3280	1	Double Slide-In Economy T-Nut	—	—	.037 lb
3465	3342	1			.500"	3208	1	Hex Nut	—	—	.016 lb
3481	3342	1			.500"	3376	1	Roll-In T-Nut with Flex Handle	—	—	.017 lb
3322	3342	1			.500"	3283	1	Roll-In T-Nut with Flex Handle	—	—	.033 lb
3321	3342	1			.500"	3382	1	Slide-In Economy T-Nut - Centered Thread	—	—	.018 lb
3358	3342	3			.500"	3287	1	Triple Slide-In Economy T-Nut	—	—	.052 lb
3004	3066	1			.750"	3208	1	Hex Nut	3258	1	.022 lb
3385	3066	1			.750"	3376	1	Roll-In T-Nut with Flex Handle	—	—	.037 lb
3485	3066	1			.750"	3376	1	Roll-In T-Nut with Flex Handle	—	—	.019 lb
3384	3066	1			.750"	3382	1	Slide-In Economy T-Nut - Centered Thread	—	—	.020 lb

80/20 BUILD YOUR IDEA
More on 80/20® products available at 8020.net

Bolt Assemblies (Continued)

1/4-20 Flat Head Socket Cap Screw (FHSCS)

Assy. No.	Bolt	Qty.	Bolt Type	Thread Size	Bolt Length	Nut	Qty.	Nut Type	Washer	Qty.	Weight
3415	3400	1	FHSCS	1/4-20	.500"	3376	1	Roll-In T-Nut with Flex Handle	—	—	.016 lb
3639*	3645	1			.500"	3624	1	Roll-In T-Nut with Flex Handle	—	—	.016 lb
3533	3400	1			.500"	3283	1	Roll-In T-Nut with Flex Handle	—	—	.028 lb
3532	3400	1			.500"	3283	1	Roll-In T-Nut with Flex Handle	—	—	.032 lb
3414	3400	1			.500"	3382	1	Slide-In Economy T-Nut - Centered Thread	—	—	.018 lb
3419	3400	1			.500"	3204	1	Standard Slide-In T-Nut	—	—	.019 lb
3524	3405	1			.625"	3376	1	Roll-In T-Nut with Flex Handle	—	—	.017 lb
3409	3405	1			.625"	14165	1	Standard Drop-In T-Nut	—	—	.017 lb
3417	3406	1			.750"	3208	1	Hex Nut	3258	1	.022 lb
3525	3406	1			.750"	3376	1	Roll-In T-Nut with Flex Handle	—	—	.019 lb
3534	3406	1			.750"	3283	1	Roll-In T-Nut with Flex Handle	—	—	.029 lb
3407	3406	1			.750"	14165	1	Standard Drop-In T-Nut	—	—	.019 lb

*Assembly comprised of stainless steel (SS) hardware

1/4-20 Socket Head Cap Screw (SHCS)

Assy. No.	Bolt	Qty.	Bolt Type	Thread Size	Bolt Length	Nut	Qty.	Nut Type	Washer	Qty.	Weight
3490	3058	1	SHCS	1/4-20	.375"	3376	1	Roll-In T-Nut with Flex Handle	—	—	.017 lb
3486	3058	1			.375"	3382	1	Slide-In Economy T-Nut - Centered Thread	—	—	.019 lb
3492	3062	1			.500"	3376	1	Roll-In T-Nut with Flex Handle	—	—	.018 lb
3496	3062	1			.500"	3376	1	Roll-In T-Nut with Flex Handle	3258	1	.022 lb
75-3813	3062	1			.500"	3376	1	Roll-In T-Nut with Flex Handle	—	—	.018 lb
75-3821	3062	1			.500"	3376	1	Roll-In T-Nut with Flex Handle	3258	1	.022 lb
3491	3062	1			.500"	3382	1	Slide-In Economy T-Nut - Centered Thread	—	—	.020 lb
3495	3062	1			.500"	3382	1	Slide-In Economy T-Nut - Centered Thread	3258	1	.024 lb
75-3812	3062	1			.500"	3382	1	Slide-In Economy T-Nut - Centered Thread	—	—	.020 lb
75-3820	3062	1			.500"	3382	1	Slide-In Economy T-Nut - Centered Thread	3258	1	.024 lb
3494	3067	1			.625"	3376	1	Roll-In T-Nut with Flex Handle	—	—	.020 lb
3498	3067	1			.625"	3376	1	Roll-In T-Nut with Flex Handle	3258	1	.023 lb
75-3815	3067	1			.625"	3376	1	Roll-In T-Nut with Flex Handle	—	—	.020 lb
75-3823	3067	1			.625"	3376	1	Roll-In T-Nut with Flex Handle	3258	1	.023 lb
3493	3067	1			.625"	3382	1	Slide-In Economy T-Nut - Centered Thread	—	—	.021 lb
3497	3067	1			.625"	3382	1	Slide-In Economy T-Nut - Centered Thread	3258	1	.025 lb
75-3814	3067	1			.625"	3382	1	Slide-In Economy T-Nut - Centered Thread	—	—	.021 lb
75-3822	3067	1			.625"	3382	1	Slide-In Economy T-Nut - Centered Thread	3258	1	.025 lb
3397	3064	1			.750"	3376	1	Roll-In T-Nut with Flex Handle	—	—	.021 lb
75-3817	3064	1			.750"	3376	1	Roll-In T-Nut with Flex Handle	—	—	.021 lb
75-3825	3064	1			.750"	3376	1	Roll-In T-Nut with Flex Handle	3258	1	.024 lb
3304	3064	1			.750"	3382	1	Slide-In Economy T-Nut - Centered Thread	—	—	.025 lb
75-3816	3064	1			.750"	3382	1	Slide-In Economy T-Nut - Centered Thread	—	—	.025 lb
75-3824	3064	1			.750"	3382	1	Slide-In Economy T-Nut - Centered Thread	3258	1	.026 lb
3315	3068	1			.875"	3208	1	Hex Nut	3258	1	.025 lb
3305	3068	1			.875"	3382	1	Slide-In Economy T-Nut - Centered Thread	—	—	.024 lb
3471	3068	1			.875"	3382	1	Slide-In Economy T-Nut - Centered Thread	3258	1	.027 lb
75-3819	3071	1			1.000"	3376	1	Roll-In T-Nut with Flex Handle	—	—	.023 lb
3306	3071	1			1.000"	3382	1	Slide-In Economy T-Nut - Centered Thread	—	—	.025 lb
75-3818	3071	1			1.000"	3382	1	Slide-In Economy T-Nut - Centered Thread	—	—	.025 lb
3307	3072	1			1.250"	3382	1	Slide-In Economy T-Nut - Centered Thread	—	—	.027 lb
3308	3080	1			1.500"	3382	1	Slide-In Economy T-Nut - Centered Thread	—	—	.041 lb
3432	3080	1			1.500"	3382	1	Slide-In Economy T-Nut - Centered Thread	3258	1	.020 lb
3433	3081	1			2.125"	3382	1	Slide-In Economy T-Nut - Centered Thread	3258	1	.027 lb
3434	3082	1			2.500"	3382	1	Slide-In Economy T-Nut - Centered Thread	—	—	.044 lb

Hardware

Bolt Assemblies (Continued)

5/16-18 Button Head Socket Cap Screw (BHSCS)

Assy. No.	Bolt	Qty.	Bolt Type	Thread Size	Bolt Length	Nut	Qty.	Nut Type	Washer	Qty.	Weight
3526	3104	1	BHSCS	5/16-18	.500"	3282	1	Roll-In T-Nut with Flex Handle	—	—	.036 lb
3437	3111	1			.625"	3282	1	Roll-In T-Nut with Flex Handle	3260	1	.043 lb
3618*	3611	1			.625"	3600	1	Roll-In T-Nut with Flex Handle	3659	1	.042 lb
75-3827	3111	1			.625"	3282	1	Roll-In T-Nut with Flex Handle	—	—	.038 lb
75-3833	3111	1			.625"	3282	1	Roll-In T-Nut with Flex Handle	3260	1	.043 lb
3527	3111	1			.625"	3282	1	Roll-In T-Nut with Flex Handle	—	—	.038 lb
3365	3111	1			.625"	3278	1	Slide-In Economy T-Nut - Offset Thread	—	—	.041 lb
3435	3111	1			.625"	3278	1	Slide-In Economy T-Nut - Offset Thread	3260	1	.045 lb
3461	3111	1			.625"	3278	1	Slide-In Economy T-Nut - Offset Thread	—	—	.041 lb
3620*	3611	1			.625"	3678	1	Slide-In Economy T-Nut - Offset Thread	3659	1	.047 lb
75-3826	3111	1			.625"	3278	1	Slide-In Economy T-Nut - Offset Thread	—	—	.041 lb
75-3832	3111	1			.625"	3278	1	Slide-In Economy T-Nut - Offset Thread	3260	1	.045 lb
3442	3114	1			.750"	3214	1	Hex Nut	3260	1	.033 lb
3467	3114	1			.750"	3214	1	Hex Nut	3260	1	.033 lb
3441	3114	1			.750"	3282	1	Roll-In T-Nut with Flex Handle	3260	1	.044 lb
75-3829	3114	1			.750"	3282	1	Roll-In T-Nut with Flex Handle	—	—	.040 lb
75-3835	3114	1			.750"	3282	1	Roll-In T-Nut with Flex Handle	3260	1	.044 lb
3528	3114	1			.750"	3282	1	Roll-In T-Nut with Flex Handle	—	—	.040 lb
3439	3114	1			.750"	3278	1	Slide-In Economy T-Nut - Offset Thread	3260	1	.043 lb
3630*	3614	1			.750"	3678	1	Slide-In Economy T-Nut - Offset Thread	3659	1	.050 lb
75-3828	3114	1			.750"	3278	1	Slide-In Economy T-Nut - Offset Thread	—	—	.039 lb
75-3834	3114	1			.750"	3278	1	Slide-In Economy T-Nut - Offset Thread	3260	1	.043 lb
3366	3114	1			.750"	—	—	—	3260	1	.023 lb
3499	3117	1			.875"	—	—	—	3260	1	.024 lb
3445	3118	1			1.000"	3282	1	Roll-In T-Nut with Flex Handle	3260	1	.048 lb
75-3831	3118	1			1.000"	3282	1	Roll-In T-Nut with Flex Handle	—	—	.044 lb
75-3837	3118	1			1.000"	3282	1	Roll-In T-Nut with Flex Handle	3260	1	.048 lb
3443	3118	1			1.000"	3278	1	Slide-In Economy T-Nut - Offset Thread	3260	1	.046 lb
3632*	3621	1			1.000"	3678	1	Slide-In Economy T-Nut - Offset Thread	3659	1	.054 lb
75-3830	3118	1			1.000"	3278	1	Slide-In Economy T-Nut - Offset Thread	—	—	.042 lb
75-3836	3118	1			1.000"	3278	1	Slide-In Economy T-Nut - Offset Thread	3260	1	.046 lb
3971	3945	1			1.750"	3759	1	Flanged Hex Nut	3760	1	.054 lb
3961	3946	1			2.000"	3759	1	Flanged Hex Nut	3760	1	.058 lb

*Assembly comprised of stainless steel (SS) hardware

5/16-18 Drop-in T-Slot Stud

Assy. No.	Bolt	Qty.	Bolt Type	Thread Size	Bolt Length	Nut	Qty.	Nut Type	Washer	Qty.	Weight
3300	3293	1	Drop-in T-Slot Stud	5/16-18	.750"	3214	1	Hex Nut	3260	1	.038 lb
3476	3293	1			.750"	3214	1		3260	1	.038 lb
3301	3295	1			1.000"	3214	1		3260	1	.041 lb
3478	3295	1			1.000"	3214	1		3260	1	.041 lb
3302	3297	1			1.250"	3214	1		3260	1	.046 lb
3303	3299	1			1.500"	3214	1		3260	1	.050 lb

5/16-18 Flat Head Socket Cap Screw (FHSCS)

Assy. No.	Bolt	Qty.	Bolt Type	Thread Size	Bolt Length	Nut	Qty.	Nut Type	Washer	Qty.	Weight
3529	3011	1	FHSCS	5/16-18	.500"	3282	1	Roll-In T-Nut with Flex Handle	—	—	.036 lb
3530	3410	1			.625"	3282	1	Roll-In T-Nut with Flex Handle	—	—	.038 lb
3412	3410	1			.625"	3278	1	Slide-In Economy T-Nut - Offset Thread	—	—	.036 lb
3413	3410	1			.625"	3282	1	Roll-In T-Nut with Flex Handle	—	—	.050 lb
3531	3411	1			.750"	3282	1	Roll-In T-Nut with Flex Handle	—	—	.041 lb

80/20 BUILD YOUR IDEA
More on 80/20® products available at 8020.net

Bolt Assemblies (Continued)

5/16-18 Flanged Button Head Socket Cap Screw (FBHSCS)

Assy. No.	Bolt	Qty.	Bolt Type	Thread Size	Bolt Length	Nut	Qty.	Nut Type	Washer	Qty.	Weight
3000	3340	2	FBHSCS	5/16-18	.500"	3279	1	Double Slide-In Economy T-Nut	—	—	.094 lb
3318	3340	1			.500"	3282	1	Roll-In T-Nut with Flex Handle	—	—	.038 lb
3319	3340	1			.500"	3278	1	Slide-In Economy T-Nut - Offset Thread	—	—	.037 lb
3355	3330	2			.687"	3279	1	Double Slide-In Economy T-Nut	—	—	.098 lb
3463	3330	1			.687"	3214	1	Hex Nut	3260	1	.033 lb
3323	3330	1			.687"	3282	1	Roll-In T-Nut with Flex Handle	—	—	.041 lb
3320	3330	1			.687"	3278	1	Slide-In Economy T-Nut - Offset Thread	—	—	.039 lb
3357	3330	3			.687"	3285	1	Triple Slide-In Economy T-Nut	—	—	.134 lb

5/16-18 Flanged Hex Head Bolt

Assy. No.	Bolt	Qty.	Bolt Type	Thread Size	Bolt Length	Nut	Qty.	Nut Type	Washer	Qty.	Weight
3970	3752	1	Flanged Hex Head Bolt	5/16-18	1.750"	3759	1	Flanged Hex Nut	—	—	.058 lb
3960	3753	1			2.000"	3759	1		—	—	.063 lb

5/16-18 Slide-In Economy T-Slot Stud

Assy. No.	Bolt	Qty.	Bolt Type	Thread Size	Bolt Length	Nut	Qty.	Nut Type	Washer	Qty.	Weight
3745	3716	1	Slide-In Economy T-Slot Stud	5/16-18	.750"	3714	1	Hex Nut	3760	1	.042 lb
3737	3720	1			1.000"	3714	1		3760	1	.045 lb

5/16-18 Slide-In Flanged Economy T-Slot Stud

Assy. No.	Bolt	Qty.	Bolt Type	Thread Size	Bolt Length	Nut	Qty.	Nut Type	Washer	Qty.	Weight
3325	3116	1	Slide-In Flanged Economy T-Slot Stud	5/16-18	.750"	3214	1	Hex Nut	3260	1	.039 lb
3150	3120	1		5/16-18	1.000"	3214	1		3260	1	.045 lb
3474	3120	1		5/16-18	1.000"	3214	1		3260	1	.045 lb
3151	3126	1		5/16-18	1.250"	3214	1		3260	1	.048 lb
3152	3134	1		5/16-18	1.500"	3214	1		3260	1	.051 lb
3153	3288	1		5/16-18	1.750"	3214	1		3260	1	.056 lb
3154	3290	1		5/16-18	2.000"	3214	1		3260	1	.060 lb

5/16-18 Socket Head Cap Screw (SHCS)

Assy. No.	Bolt	Qty.	Bolt Type	Thread Size	Bolt Length	Nut	Qty.	Nut Type	Washer	Qty.	Weight
3452	3106	1	SHCS	5/16-18	.500"	3282	1	Roll-In T-Nut with Flex Handle	—	—	.040 lb
75-3839	3106	1			.500"	3282	1	Roll-In T-Nut with Flex Handle	—	—	.040 lb
3450	3106	1			.500"	3278	1	Slide-In Economy T-Nut - Offset Thread	—	—	.034 lb
3634*	3610	1			.500"	3678	1	Slide-In Economy T-Nut - Offset Thread	—	—	.035 lb
75-3838	3106	1			.500"	3278	1	Slide-In Economy T-Nut - Offset Thread	—	—	.034 lb
3456	3110	1			.625"	3282	1	Roll-In T-Nut with Flex Handle	—	—	.053 lb
3464	3110	1			.625"	3282	1	Roll-In T-Nut with Flex Handle	3260	1	.057 lb
75-3841	3110	1			.625"	3282	1	Roll-In T-Nut with Flex Handle	—	—	.053 lb
75-3847	3110	1			.625"	3282	1	Roll-In T-Nut with Flex Handle	3260	1	.057 lb
3454	3110	1			.625"	3278	1	Slide-In Economy T-Nut - Offset Thread	—	—	.040 lb
3462	3110	1			.625"	3278	1	Slide-In Economy T-Nut - Offset Thread	3260	1	.045 lb
3636*	3612	1			.625"	3678	1	Slide-In Economy T-Nut - Offset Thread	—	—	.036 lb
3699*	3612	1			.625"	3678	1	Slide-In Economy T-Nut - Offset Thread	3659	1	.040 lb
75-3840	3110	1			.625"	3278	1	Slide-In Economy T-Nut - Offset Thread	—	—	.040 lb
75-3846	3110	1			.625"	3278	1	Slide-In Economy T-Nut - Offset Thread	3260	1	.045 lb
3468	3112	1			.750"	3282	1	Roll-In T-Nut with Flex Handle	3260	1	.049 lb
75-3843	3112	1			.750"	3282	1	Roll-In T-Nut with Flex Handle	—	—	.044 lb

*Assembly comprised of stainless steel (SS) hardware

Hardware

Bolt Assemblies (Continued)

5/16-18 Socket Head Cap Screw (SHCS)

Assy. No.	Bolt	Qty.	Bolt Type	Thread Size	Bolt Length	Nut	Qty.	Nut Type	Washer	Qty.	Weight
75-3849	3112	1	SHCS	5/16-18	.750"	3282	1	Roll-In T-Nut with Flex Handle	3260	1	.053 lb
3455	3112	1			.750"	3278	1	Slide-In Economy T-Nut - Offset Thread	—	—	.041 lb
3466	3112	1			.750"	3278	1	Slide-In Economy T-Nut - Offset Thread	3260	1	.047 lb
3640*	3615	1			.750"	3678	1	Slide-In Economy T-Nut - Offset Thread	3659	1	.051 lb
75-3842	3112	1			.750"	3278	1	Slide-In Economy T-Nut - Offset Thread	—	—	.041 lb
75-3848	3112	1			.750"	3278	1	Slide-In Economy T-Nut - Offset Thread	3260	1	.045 lb
3446	3119	1			.875"	3214	1	Hex Nut	3260	1	.040 lb
3460	3119	1			.875"	3282	1	Roll-In T-Nut with Flex Handle	—	—	.055 lb
3458	3119	1			.875"	3278	1	Slide-In Economy T-Nut - Offset Thread	—	—	.045 lb
3638*	3619	1			.875"	3678	1	Slide-In Economy T-Nut - Offset Thread	—	—	.039 lb
3473	3122	1			1.000"	3214	1	Hex Nut	3260	1	.042 lb
3472	3122	1			1.000"	3282	1	Roll-In T-Nut with Flex Handle	3260	1	.060 lb
75-3845	3122	1			1.000"	3282	1	Roll-In T-Nut with Flex Handle	—	—	.056 lb
75-3851	3122	1			1.000"	3282	1	Roll-In T-Nut with Flex Handle	3260	1	.060 lb
3470	3122	1			1.000"	3278	1	Slide-In Economy T-Nut - Offset Thread	3260	1	.051 lb
3642*	3622	1			1.000"	3678	1	Slide-In Economy T-Nut - Offset Thread	3659	1	.044 lb
75-3844	3122	1			1.000"	3278	1	Slide-In Economy T-Nut - Offset Thread	—	—	.046 lb
75-3850	3122	1			1.000"	3278	1	Slide-In Economy T-Nut - Offset Thread	3260	1	.051 lb
3421	3123	1			1.300"	3278	1	Slide-In Economy T-Nut - Offset Thread	3260	1	.056 lb
3422	3127	1			1.500"	3278	1	Slide-In Economy T-Nut - Offset Thread	3260	1	.041 lb
3613	3127	1			1.500"	3278	1	Slide-In Economy T-Nut - Offset Thread	—	—	.056 lb
3423	3129	1			1.750"	3278	1	Slide-In Economy T-Nut - Offset Thread	3260	1	.065 lb
3972	3955	1			1.750"	3759	1	Flanged Hex Nut	3760	1	.060 lb
3424	3130	1			2.000"	3278	1	Slide-In Economy T-Nut - Offset Thread	3260	1	.070 lb
3962	3956	1			2.000"	3759	1	Flanged Hex Nut	3760	1	.064 lb
3427	3131	1			2.250"	3278	1	Slide-In Economy T-Nut - Offset Thread	—	—	.072 lb
3428	3132	1			2.500"	3278	1	Slide-In Economy T-Nut - Offset Thread	3260	1	.080 lb
3429	3132	1			2.500"	3278	1	Slide-In Economy T-Nut - Offset Thread	—	—	.076 lb
3430	3133	1			3.000"	3278	1	Slide-In Economy T-Nut - Offset Thread	—	—	.086 lb
3431	3140	1			3.250"	3278	1	Slide-In Economy T-Nut - Offset Thread	—	—	.093 lb

*Assembly comprised of stainless steel (SS) hardware

3/8-16 Socket Head Cap Screw (SHCS)

Assy. No.	Bolt	Qty.	Bolt Type	Thread Size	Bolt Length	Nut	Qty.	Nut Type	Washer	Qty.	Weight
3289	3124	1	SHCS	3/8-16	1.000"	—	—	—	3261	1	.051 lb

8-32 Button Head Socket Cap Screw (BHSCS)

Assy. No.	Bolt	Qty.	Bolt Type	Thread Size	Bolt Length	Nut	Qty.	Nut Type	Washer	Qty.	Weight
3483	3005	1	BHSCS	8-32	.375"	3275	1	Slide-In Economy T-Nut - Centered Thread	—	—	.016 lb
3489	3024	1			.500"	3007	1	8-32 Hex Nut	3006	1	.001 lb

10-32 Button Head Socket Cap Screw (BHSCS)

Assy. No.	Bolt	Qty.	Bolt Type	Thread Size	Bolt Length	Nut	Qty.	Nut Type	Washer	Qty.	Weight
3426	3042	1	BHSCS	10-32	.375"	3205	1	Standard Slide-In T-Nut	—	—	.011 lb
3487	3050	1			.500"	3201	1	Standard Slide-In T-Nut	—	—	.030 lb
3488	3051	1			.625"	3053	1	Hex Nut	3055	1	.008 lb

10-32 Socket Head Cap Screw (SHCS)

Assy. No.	Bolt	Qty.	Bolt Type	Thread Size	Bolt Length	Nut	Qty.	Nut Type	Washer	Qty.	Weight
3457	3044	1	SHCS	10-32	.375"	3276	1	Slide-In Economy T-Nut - Centered Thread	—	—	.013 lb
3459	3052	1			.625"	3053	1	Hex Nut	3055	1	.008 lb

80/20 BUILD YOUR IDEA
More on 80/20® products available at 8020.net

Bolt Assemblies (Continued)

M6 x 1.0 Button Head Socket Cap Screw (BHSCS)

Assy. No.	Bolt	Qty.	Bolt Type	Thread Size	Bolt Length	Nut	Qty.	Nut Type	Washer	Qty.	Weight
75-3509	13-6310	2	BHSCS	M6 X 1.0	10.00mm	25-1962	1	Double Slide-In Economy T-Nut	—	—	.033 lb
75-3435	13-6310	1			10.00mm	3876	1	Roll-In T-Nut with Flex Handle	—	—	.014 lb
75-3640	11-6310	1			10.00mm	25-1966	1	Roll-In T-Nut with Flex Handle	—	—	.018 lb
75-3641	11-6310	1			10.00mm	25-1966	1	Roll-In T-Nut with Flex Handle	—	—	.012 lb
75-3642	11-6310	1			10.00mm	25-1966	1	Roll-In T-Nut with Flex Handle	—	—	.014 lb
75-3404	13-6310	1			10.00mm	3859	1	Slide-In Economy T-Nut - Centered Thread	—	—	.030 lb
75-3515	11-6310	1			10.00mm	3859	1	Slide-In Economy T-Nut - Centered Thread	—	—	.032 lb
75-3599	11-6310	1			10.00mm	3931	1	Standard Drop-In T-Nut	—	—	.012 lb
75-3510	13-6312	2			12.00mm	25-1962	1	Double Slide-In Economy T-Nut	—	—	.034 lb
75-3511	13-6312	2			12.00mm	25-1962	1	Double Slide-In Economy T-Nut	13-6041	2	.038 lb
75-3466	13-6312	1			12.00mm	13-6065	1	Hex Nut	13-6041	1	.014 lb
75-3436	13-6312	1			12.00mm	3876	1	Roll-In T-Nut with Flex Handle	—	—	.015 lb
3824	3802	1			12.00mm	3876	1	Roll-In T-Nut with Flex Handle	3861	1	.017 lb
3867	3802	1			12.00mm	3876	1	Roll-In T-Nut with Flex Handle	—	—	.015 lb
75-3439	13-6312	1			12.00mm	3876	1	Roll-In T-Nut with Flex Handle	13-6041	1	.016 lb
75-3405	13-6312	1			12.00mm	3859	1	Slide-In Economy T-Nut - Centered Thread	—	—	.016 lb
75-3408	13-6312	1			12.00mm	3859	1	Slide-In Economy T-Nut - Centered Thread	13-6041	1	.019 lb
75-3516	11-6312	1			12.00mm	3859	1	Slide-In Economy T-Nut - Centered Thread	—	—	.017 lb
75-3518	11-6312	1			12.00mm	3859	1	Slide-In Economy T-Nut - Centered Thread	11-6041	1	.014 lb
75-3600	11-6312	1			12.00mm	3931	1	Standard Drop-In T-Nut	—	—	.014 lb
75-3603	11-6314	1			14.00mm	11-6065	1	Hex Nut	—	—	.013 lb
75-3643	11-6314	1			14.00mm	25-1966	1	Roll-In T-Nut with Flex Handle	—	—	.015 lb
75-3601	11-6314	1			14.00mm	13119	1	Standard Drop-In T-Nut	—	—	.015 lb
75-3602	11-6314	1			14.00mm	13129	1	Standard Drop-In T-Nut	—	—	.023 lb
75-3622	11-6314	1			14.00mm	13119	1	Standard Drop-In T-Nut	—	—	.015 lb
75-3467	13-6316	1			16.00mm	13-6065	1	Hex Nut	13-6041	1	.014 lb
75-3437	13-6316	1			16.00mm	3876	1	Roll-In T-Nut with Flex Handle	—	—	.015 lb
3827	3804	1			16.00mm	3876	1	Roll-In T-Nut with Flex Handle	3861	1	.018 lb
75-3440	13-6316	1			16.00mm	3876	1	Roll-In T-Nut with Flex Handle	13-6041	1	.016 lb
75-3406	13-6316	1			16.00mm	3859	1	Slide-In Economy T-Nut - Centered Thread	—	—	.019 lb
3826	3804	1			16.00mm	3836	1	Slide-In Economy T-Nut - Centered Thread	3861	1	.028 lb
75-3409	13-6316	1			16.00mm	3859	1	Slide-In Economy T-Nut - Centered Thread	13-6041	1	.017 lb
75-3480	13-6316	1			16.00mm	40-1961	1	Slide-In Economy T-Nut - Centered Thread	13-6041	1	.028 lb
75-3517	11-6316	1			16.00mm	3859	1	Slide-In Economy T-Nut - Centered Thread	—	—	.020 lb
75-3519	11-6316	1			16.00mm	3859	1	Slide-In Economy T-Nut - Centered Thread	11-6041	1	.020 lb
75-3477	13-6316	1			16.00mm	—	—	—	13-6041	1	.010 lb
75-3605	11-6318	1			18.00mm	11-6065	1	Hex Nut	11-6041	1	.054 lb
75-3482	11-6318	1			18.00mm	13129	1	Standard Drop-In T-Nut	—	—	.024 lb
75-3468	13-6320	1			20.00mm	13-6065	1	Hex Nut	13-6041	1	.017 lb
3850	3808	1			20.00mm	3876	1	Roll-In T-Nut with Flex Handle	3861	1	.020 lb
75-3438	13-6320	1			20.00mm	3876	1	Roll-In T-Nut with Flex Handle	—	—	.018 lb
75-3441	13-6320	1			20.00mm	3876	1	Roll-In T-Nut with Flex Handle	13-6041	1	.020 lb
75-3407	13-6320	1			20.00mm	3859	1	Slide-In Economy T-Nut - Centered Thread	—	—	.019 lb
75-3410	13-6320	1			20.00mm	3859	1	Slide-In Economy T-Nut - Centered Thread	13-6041	1	.021 lb
3829	3809	1			25.00mm	3876	1	Roll-In T-Nut with Flex Handle	3861	1	.022 lb

Hardware

Bolt Assemblies (Continued)

M6 x 1.0 Flat Head Socket Cap Screw (FHSCS)

Assy. No.	Bolt	Qty.	Bolt Type	Thread Size	Bolt Length	Nut	Qty.	Nut Type	Washer	Qty.	Weight
75-3541	13-6710	2	FHSCS	M6 X 1.0	10.00mm	25-1961	2	Slide-In Economy T-Nut - Centered Thread	—	—	.016 lb
75-3505	13-6712	1			12.00mm	3876	1	Roll-In T-Nut with Flex Handle	—	—	.015 lb
75-3645	13-6712	1			12.00mm	25-1966	1	Roll-In T-Nut with Flex Handle	—	—	.014 lb
75-3507	13-6712	1			12.00mm	3859	1	Slide-In Economy T-Nut - Centered Thread	—	—	.016 lb
75-3639	17-6712*	1			12.00mm	3873	1	Standard Slide-In T-Nut	—	—	.014 lb
75-3616	11-6714	1			14.00mm	3873	1	Standard Slide-In T-Nut	—	—	.011 lb
75-3584	11-6714	1			14.00mm	3873	1	Standard Slide-In T-Nut	—	—	.011 lb
75-3585	11-6714	1			14.00mm	3931	1	Standard Drop-In T-Nut	—	—	.015 lb
75-3647	11-6716	1			16.00mm	25-1966	1	Roll-In T-Nut with Flex Handle	—	—	.011 lb
75-3655	11-6716	1			16.00mm	40-1966	1	Roll-In T-Nut with Flex Handle	—	—	.026 lb
75-3591	11-6716	1			16.00mm	13119	1	Standard Drop-In T-Nut	—	—	.016 lb
75-3587	11-6718	1			18.00mm	13129	1	Standard Drop-In T-Nut	—	—	.011 lb
75-3628	11-6718	1			18.00mm	13119	1	Standard Drop-In T-Nut	—	—	.012 lb
75-3589	11-6720	1			20.00mm	11-6065	1	Hex Nut	11-6041	1	.011 lb
75-3644	11-6720	1			20.00mm	25-1966	1	Roll-In T-Nut with Flex Handle	—	—	.017 lb
75-3654	11-6720	1			20.00mm	40-1966	1	Roll-In T-Nut with Flex Handle	—	—	.026 lb
75-3588	11-6720	1			20.00mm	13129	1	Standard Drop-In T-Nut	—	—	.011 lb

M6 x 1.0 Socket Head Cap Screw (SHCS)

Assy. No.	Bolt	Qty.	Bolt Type	Thread Size	Bolt Length	Nut	Qty.	Nut Type	Washer	Qty.	Weight
75-3442	13-6510	1	SHCS	M6 X 1.0	10.00mm	3876	1	Roll-In T-Nut with Flex Handle	—	—	.014 lb
75-3520	11-6510	1			10.00mm	3859	1	Slide-In Economy T-Nut - Centered Thread	—	—	.019 lb
75-3411	13-6510	1			10.00mm	3859	1	Slide-In Economy T-Nut - Centered Thread	—	—	.019 lb
75-3590	11-6510	1			10.00mm	3931	1	Standard Drop-In T-Nut	—	—	.017 lb
75-3469	13-6512	1			12.00mm	13-6065	1	Hex Nut	13-6041	1	.016 lb
3833	3801	1			12.00mm	3876	1	Roll-In T-Nut with Flex Handle	—	—	.022 lb
3849	3801	1			12.00mm	3876	1	Roll-In T-Nut with Flex Handle	3861	1	.020 lb
75-3443	13-6512	1			12.00mm	3876	1	Roll-In T-Nut with Flex Handle	—	—	.014 lb
75-3450	13-6512	1			12.00mm	3876	1	Roll-In T-Nut with Flex Handle	13-6041	1	.020 lb
75-3412	13-6512	1			12.00mm	3859	1	Slide-In Economy T-Nut - Centered Thread	—	—	.019 lb
75-3521	11-6512	1			12.00mm	3859	1	Slide-In Economy T-Nut - Centered Thread	—	—	.020 lb
3831	3801	1			12.00mm	3836	1	Slide-In Economy T-Nut - Centered Thread	—	—	.022 lb
75-3419	13-6512	1			12.00mm	3859	1	Slide-In Economy T-Nut - Centered Thread	13-6041	1	.022 lb
75-3598	11-6512	1			12.00mm	3931	1	Standard Drop-In T-Nut	—	—	.020 lb
75-3592	11-6514	1			14.00mm	3873	1	Standard Slide-In T-Nut	—	—	.012 lb
75-3593	11-6514	1			14.00mm	3931	1	Standard Drop-In T-Nut	—	—	.018 lb
75-3594	11-6514	1			14.00mm	13129	1	Standard Drop-In T-Nut	—	—	.012 lb
75-3470	13-6516	1			16.00mm	13-6065	1	Hex Nut	13-6041	1	.018 lb
3856	3803	1			16.00mm	3876	1	Roll-In T-Nut with Flex Handle	3861	1	.022 lb
75-3444	13-6516	1			16.00mm	3876	1	Roll-In T-Nut with Flex Handle	—	—	.015 lb
75-3451	13-6516	1			16.00mm	3876	1	Roll-In T-Nut with Flex Handle	13-6041	1	.022 lb
75-3413	13-6516	1			16.00mm	3859	1	Slide-In Economy T-Nut - Centered Thread	—	—	.017 lb
75-3522	11-6516	1			16.00mm	3859	1	Slide-In Economy T-Nut - Centered Thread	—	—	.021 lb
3835	3803	1			16.00mm	3836	1	Slide-In Economy T-Nut - Centered Thread	—	—	.029 lb
75-3420	13-6516	1			16.00mm	3859	1	Slide-In Economy T-Nut - Centered Thread	13-6041	1	.033 lb
75-3595	11-6516	1			16.00mm	3931	1	Standard Drop-In T-Nut	—	—	.019 lb
75-3596	11-6518	1			18.00mm	3931	1	Standard Drop-In T-Nut	—	—	.019 lb

80/20 BUILD YOUR IDEA
More on 80/20® products available at 8020.net

Bolt Assemblies (Continued)

M6 x 1.0 Socket Head Cap Screw (SHCS)

Assy. No.	Bolt	Qty.	Bolt Type	Thread Size	Bolt Length	Nut	Qty.	Nut Type	Washer	Qty.	Weight
3847	3806	1	SHCS	M6 X 1.0	20.00mm	3876	1	Roll-In T-Nut with Flex Handle	—	—	.021 lb
3855	3806	1			20.00mm	3876	1	Roll-In T-Nut with Flex Handle	3861	1	.023 lb
75-3445	13-6520	1			20.00mm	3876	1	Roll-In T-Nut with Flex Handle	—	—	.021 lb
3035	13-6520	1			20.00mm	3859	1	Slide-In Economy T-Nut - Centered Thread	—	—	.022 lb
75-3414	13-6520	1			20.00mm	3859	1	Slide-In Economy T-Nut - Centered Thread	—	—	.022 lb
75-3523	11-6520	1			20.00mm	3859	1	Slide-In Economy T-Nut - Centered Thread	—	—	.029 lb
75-3597	11-6520	1			20.00mm	13129	1	Standard Drop-In T-Nut	—	—	.010 lb
3845	3807	1			25.00mm	3876	1	Roll-In T-Nut with Flex Handle	—	—	.023 lb
3862	3807	1			25.00mm	3876	1	Roll-In T-Nut with Flex Handle	3861	1	.025 lb
75-3446	13-6525	1			25.00mm	3876	1	Roll-In T-Nut with Flex Handle	—	—	.023 lb
75-3415	13-6525	1			25.00mm	3859	1	Slide-In Economy T-Nut - Centered Thread	—	—	.024 lb
3841	3807	1			25.00mm	3836	1	Slide-In Economy T-Nut - Centered Thread	—	—	.031 lb
75-3524	11-6525	1			25.00mm	3859	1	Slide-In Economy T-Nut - Centered Thread	—	—	.031 lb
75-3447	13-6530	1			30.00mm	3876	1	Roll-In T-Nut with Flex Handle	—	—	.025 lb
75-3416	13-6530	1			30.00mm	3859	1	Slide-In Economy T-Nut - Centered Thread	—	—	.030 lb
75-3448	13-6535	1			35.00mm	3876	1	Roll-In T-Nut with Flex Handle	—	—	.029 lb
75-3417	13-6535	1			35.00mm	3859	1	Slide-In Economy T-Nut - Centered Thread	—	—	.029 lb
75-3449	13-6540	1			40.00mm	3876	1	Roll-In T-Nut with Flex Handle	—	—	.030 lb
75-3418	13-6540	1			40.00mm	3859	1	Slide-In Economy T-Nut - Centered Thread	—	—	.036 lb

M8 x 1.25 Button Head Socket Cap Screw (BHSCS)

Assy. No.	Bolt	Qty.	Bolt Type	Thread Size	Bolt Length	Nut	Qty.	Nut Type	Washer	Qty.	Weight
75-3512	13-8312	2	BHSCS	M8 X 1.25	12.00mm	40-1982	1	Double Slide-In Economy T-Nut	—	—	.094 lb
75-3452	13-8312	1			12.00mm	3842	1	Roll-In T-Nut with Flex Handle	—	—	.036 lb
75-3649	11-8312	1			12.00mm	40-1986	1	Roll-In T-Nut with Flex Handle	—	—	.036 lb
75-3615	11-8312	1			12.00mm	13094	1	Self-Aligning Roll-In T-Nut	—	—	.022 lb
75-3421	13-8312	1			12.00mm	3838	1	Slide-In Economy T-Nut - Offset Thread	—	—	.036 lb
75-3525	11-8312	1			12.00mm	3838	1	Slide-In Economy T-Nut - Offset Thread	—	—	.036 lb
75-3513	13-8316	2			16.00mm	40-1982	1	Double Slide-In Economy T-Nut	—	—	.099 lb
75-3514	13-8316	2			16.00mm	40-1982	1	Double Slide-In Economy T-Nut	13-6042	2	.105 lb
75-3471	13-8316	1			16.00mm	13-8065	1	Hex Nut	13-6042	1	.030 lb
3832	3813	1			16.00mm	3842	1	Roll-In T-Nut with Flex Handle	3860	1	.042 lb
75-3453	13-8316	1			16.00mm	3842	1	Roll-In T-Nut with Flex Handle	—	—	.039 lb
75-3456	13-8316	1			16.00mm	3842	1	Roll-In T-Nut with Flex Handle	13-6042	1	.042 lb
75-3650	11-8316	1			16.00mm	40-1986	1	Roll-In T-Nut with Flex Handle	—	—	.039 lb
75-3422	13-8316	1			16.00mm	3838	1	Slide-In Economy T-Nut - Offset Thread	—	—	.038 lb
75-3425	13-8316	1			16.00mm	3838	1	Slide-In Economy T-Nut - Offset Thread	13-6042	1	.041 lb
75-3526	11-8316	1			16.00mm	3838	1	Slide-In Economy T-Nut - Offset Thread	—	—	.038 lb
75-3528	11-8316	1			16.00mm	3838	1	Slide-In Economy T-Nut - Offset Thread	11-6042	1	.042 lb
3830	3813	1			16.00mm	3838	1	Slide-In Economy T-Nut - Offset Thread	3860	1	.041 lb
75-3651	11-8318	1			18.00mm	40-1986	1	Roll-In T-Nut with Flex Handle	—	—	.040 lb
75-3619	11-8318	1			18.00mm	13132	1	Standard Drop-In T-Nut	—	—	.024 lb
75-3472	13-8320	1			20.00mm	13-8065	1	Hex Nut	13-6042	1	.032 lb
3863	3815	2			20.00mm	3879	1	Double Slide-In Economy T-Nut	3860	2	.093 lb
3872	3815	1			20.00mm	3842	1	Roll-In T-Nut with Flex Handle	3860	1	.044 lb
75-3454	13-8320	1			20.00mm	3842	1	Roll-In T-Nut with Flex Handle	—	—	.041 lb

Hardware

Bolt Assemblies (Continued)

M8 x 1.25 Button Head Socket Cap Screw (BHSCS)

Assy. No.	Bolt	Qty.	Bolt Type	Thread Size	Bolt Length	Nut	Qty.	Nut Type	Washer	Qty.	Weight
75-3457	13-8320	1	BHSCS	M8 X 1.25	20.00mm	3842	1	Roll-In T-Nut with Flex Handle	13-6042	1	.045 lb
75-3648	11-8320	1			20.00mm	40-1986	1	Roll-In T-Nut with Flex Handle	—	—	.032 lb
3870	3815	1			20.00mm	3838	1	Slide-In Economy T-Nut - Offset Thread	3860	1	.044 lb
75-3423	13-8320	1			20.00mm	3838	1	Slide-In Economy T-Nut - Offset Thread	—	—	.041 lb
75-3426	13-8320	1			20.00mm	3838	1	Slide-In Economy T-Nut - Offset Thread	13-6042	1	.044 lb
75-3527	11-8320	1			20.00mm	3838	1	Slide-In Economy T-Nut - Offset Thread	—	—	.031 lb
75-3529	11-8320	1			20.00mm	3838	1	Slide-In Economy T-Nut - Offset Thread	11-6042	1	.035 lb
75-3478	13-8320	1			20.00mm	—	—	—	13-6042	1	.023 lb
3886	3819	1			25.00mm	3842	1	Roll-In T-Nut with Flex Handle	3860	1	.049 lb
75-3455	13-8325	1			25.00mm	3842	1	Roll-In T-Nut with Flex Handle	—	—	.044 lb
75-3458	13-8325	1			25.00mm	3842	1	Roll-In T-Nut with Flex Handle	13-6042	1	.048 lb
3877	3819	1			25.00mm	3838	1	Slide-In Economy T-Nut - Offset Thread	3860	1	.043 lb
75-3427	13-8325	1			25.00mm	3838	1	Slide-In Economy T-Nut - Offset Thread	13-6042	1	.047 lb
75-3473	13-8325	1			25.00mm	13-8065	1	Hex Nut	13-6042	1	.035 lb
3974	13-3945	1			45.00mm	13-3759	1	Flanged Hex Nut	3860	1	.058 lb
3964	13-3946	1			50.00mm	13-3759	1	Flanged Hex Nut	3860	1	.061 lb

M8 x 1.25 Flanged Hex Head Bolt

Assy. No.	Bolt	Qty.	Bolt Type	Thread Size	Bolt Length	Nut	Qty.	Nut Type	Washer	Qty.	Weight
3963	13-3753	1	Flanged Hex Head Bolt	M8 x 1.25	50.00mm	13-3759	1	Flanged Hex Nut	—	—	.077 lb

M8 x 1.25 Flat Head Socket Cap Screw (FHSCS)

Assy. No.	Bolt	Qty.	Bolt Type	Thread Size	Bolt Length	Nut	Qty.	Nut Type	Washer	Qty.	Weight
75-3506	13-8716	1	FHSCS	M8 X 1.25	16.00mm	3842	1	Roll-In T-Nut with Flex Handle	—	—	.029 lb
75-3653	11-8716	1			16.00mm	40-1986	1	Roll-In T-Nut with Flex Handle	—	—	.036 lb
75-3629	11-8716	1			16.00mm	13025	1	Self-Aligning Slide-In T-Nut	—	—	.031 lb
75-3508	13-8716	1			16.00mm	3838	1	Slide-In Economy T-Nut - Offset Thread	—	—	.028 lb
75-3618	11-8716	1			16.00mm	40-1981	1	Slide-In Economy T-Nut - Offset Thread	—	—	.036 lb
75-3617	11-8720	1			20.00mm	11-8065	1	Hex Nut	—	—	.028 lb
75-3652	11-8720	1			20.00mm	40-1986	1	Roll-In T-Nut with Flex Handle	—	—	.024 lb

M8 x 1.25 Slide-In Flanged Economy T-Slot Stud

Assy. No.	Bolt	Qty.	Bolt Type	Thread Size	Bolt Length	Nut	Qty.	Nut Type	Washer	Qty.	Weight
3825	3851	1	Slide-In Flanged Economy T-Slot Stud	M8 X 1.25	20.00mm	3821	1	Hex Nut	3860	1	.042 lb
3880	3851	1			20.00mm	3821	1	Hex Nut	3860	1	.040 lb
3889	3851	1			20.00mm	3821	1	Hex Nut	3860	1	.040 lb
75-3500	3851	1			20.00mm	3821	1	Hex Nut	3860	1	.040 lb
3881	3852	1			25.00mm	3821	1	Hex Nut	3860	1	.043 lb
75-3501	3852	1			25.00mm	3821	1	Hex Nut	3860	1	.043 lb
3882	3853	1			30.00mm	3821	1	Hex Nut	3860	1	.046 lb
3890	3853	1			30.00mm	3821	1	Hex Nut	3860	1	.046 lb
75-3502	3853	1			30.00mm	3821	1	Hex Nut	3860	1	.046 lb
3883	3854	1			35.00mm	3821	1	Hex Nut	3860	1	.051 lb
75-3503	3854	1			35.00mm	3821	1	Hex Nut	3860	1	.051 lb
3884	3857	1			45.00mm	3821	1	Hex Nut	3860	1	.058 lb
75-3504	3857	1			45.00mm	3821	1	Hex Nut	3860	1	.058 lb

80/20 BUILD YOUR IDEA
More on 80/20® products available at 8020.net

Bolt Assemblies (Continued)

M8 x 1.25 Socket Head Cap Screw (SHCS)

Assy. No.	Bolt	Qty.	Bolt Type	Thread Size	Bolt Length	Nut	Qty.	Nut Type	Washer	Qty.	Weight
3840	3810	1	SHCS	M8 X 1.25	12.00mm	3842	1	Roll-In T-Nut with Flex Handle	—	—	.043 lb
75-3459	13-8512	1			12.00mm	3842	1	Roll-In T-Nut with Flex Handle	—	—	.044 lb
75-3624	11-8512	1			12.00mm	13025	1	Self-Aligning Slide-In T-Nut	—	—	.037 lb
3834	3810	1			12.00mm	3838	1	Slide-In Economy T-Nut - Offset Thread	—	—	.041 lb
75-3428	13-8512	1			12.00mm	3838	1	Slide-In Economy T-Nut - Offset Thread	—	—	.041 lb
75-3530	11-8512	1			12.00mm	3838	1	Slide-In Economy T-Nut - Offset Thread	—	—	.023 lb
75-3620	11-8512	1			12.00mm	30-3796	1	Slide-In Economy T-Nut - Centered Thread	—	—	.021 lb
3865	3812	1			16.00mm	3842	1	Roll-In T-Nut with Flex Handle	—	—	.036 lb
3878	3812	1			16.00mm	3842	1	Roll-In T-Nut with Flex Handle	3860	1	.039 lb
75-3460	13-8516	1			16.00mm	3842	1	Roll-In T-Nut with Flex Handle	—	—	.046 lb
75-3463	13-8516	1			16.00mm	3842	1	Roll-In T-Nut with Flex Handle	13-6042	1	.049 lb
75-3625	11-8516	1			16.00mm	13025	1	Self-Aligning Slide-In T-Nut	—	—	.040 lb
75-3621	11-8516	1			16.00mm	3838	1	Slide-In Economy T-Nut - Offset Thread	—	—	.044 lb
3864	3812	1			16.00mm	3838	1	Slide-In Economy T-Nut - Offset Thread	—	—	.058 lb
3874	3812	1			16.00mm	3838	1	Slide-In Economy T-Nut - Offset Thread	3860	1	.038 lb
75-3429	13-8516	1			16.00mm	3838	1	Slide-In Economy T-Nut - Offset Thread	—	—	.032 lb
75-3432	13-8516	1			16.00mm	3838	1	Slide-In Economy T-Nut - Offset Thread	13-6042	1	.032 lb
75-3531	11-8516	1			16.00mm	3838	1	Slide-In Economy T-Nut - Offset Thread	—	—	.044 lb
75-3534	11-8516	1			16.00mm	3838	1	Slide-In Economy T-Nut - Offset Thread	11-6042	1	.049 lb
75-3623	11-8516	1			16.00mm	13132	1	Standard Drop-In T-Nut	—	—	.037 lb
75-3627	11-8518	1			18.00mm	13025	1	Self-Aligning Slide-In T-Nut	—	—	.041 lb
75-3634	11-8518	1			18.00mm	3838	1	Slide-In Economy T-Nut - Offset Thread	—	—	.045 lb
75-3626	11-8518	1			18.00mm	13132	1	Standard Drop-In T-Nut	—	—	.038 lb
75-3475	13-8520	1			20.00mm	13-8065	1	Hex Nut	13-6042	1	.041 lb
3817	3814	1			20.00mm	3842	1	Roll-In T-Nut with Flex Handle	3860	1	.053 lb
3869	3814	1			20.00mm	3842	1	Roll-In T-Nut with Flex Handle	—	—	.049 lb
75-3461	13-8520	1			20.00mm	3842	1	Roll-In T-Nut with Flex Handle	—	—	.047 lb
75-3464	13-8520	1			20.00mm	3842	1	Roll-In T-Nut with Flex Handle	13-6042	1	.050 lb
3816	3814	1			20.00mm	3838	1	Slide-In Economy T-Nut - Offset Thread	3860	1	.051 lb
3899	3814	1			20.00mm	3838	1	Slide-In Economy T-Nut - Offset Thread	—	—	.048 lb
75-3433	13-8520	1			20.00mm	3838	1	Slide-In Economy T-Nut - Offset Thread	13-6042	1	.049 lb
75-3535	11-8520	1			20.00mm	3838	1	Slide-In Economy T-Nut - Offset Thread	11-6042	1	.051 lb
75-3430	13-8520	1			20.00mm	3838	1	Slide-In Economy T-Nut - Offset Thread	—	—	.046 lb
75-3630	11-8520	1			20.00mm	13132	1	Standard Drop-In T-Nut	—	—	.039 lb
75-3476	13-8525	1			25.00mm	13-8065	1	Hex Nut	13-6042	1	.044 lb
3888	3818	1			25.00mm	3842	1	Roll-In T-Nut with Flex Handle	3860	1	.056 lb
75-3462	13-8525	1			25.00mm	3842	1	Roll-In T-Nut with Flex Handle	—	—	.053 lb
75-3465	13-8525	1			25.00mm	3842	1	Roll-In T-Nut with Flex Handle	13-6042	1	.057 lb
3887	3818	1			25.00mm	3838	1	Slide-In Economy T-Nut - Offset Thread	3860	1	.054 lb
75-3431	13-8525	1			25.00mm	3838	1	Slide-In Economy T-Nut - Offset Thread	—	—	.050 lb
75-3434	13-8525	1			25.00mm	3838	1	Slide-In Economy T-Nut - Offset Thread	13-6042	1	.055 lb
75-3533	11-8525	1			25.00mm	3838	1	Slide-In Economy T-Nut - Offset Thread	—	—	.051 lb
75-3536	11-8525	1			25.00mm	3838	1	Slide-In Economy T-Nut - Offset Thread	11-6042	1	.054 lb
75-3479	13-8540	1			40.00mm	3838	1	Slide-In Economy T-Nut - Offset Thread	—	—	.040 lb
3975	13-3955	1			45.00mm	13-3759	1	Flanged Hex Nut	3860	1	.065 lb
3965	13-3956	1			50.00mm	13-3759	1	Flanged Hex Nut	3860	1	.070 lb

Hardware

Bolt Assemblies (Continued)

M4 x 0.7 Button Head Socket Cap Screw (BHSCS)

Assy. No.	Bolt	Qty.	Bolt Type	Thread Size	Bolt Length	Nut	Qty.	Nut Type	Washer	Qty.	Weight
75-3537	11-4310	1	BHSCS	M4 x 0.7	10.00mm	25-1941	1	Slide-In Economy T-Nut - Offset Thread	—	—	.008 lb
75-3538	11-4312	1			12.00mm	11-4065	1	Hex Nut	11-6039	1	.005 lb

M4 x 0.7 Flat Head Socket Cap Screw (FHSCS)

Assy. No.	Bolt	Qty.	Bolt Type	Thread Size	Bolt Length	Nut	Qty.	Nut Type	Washer	Qty.	Weight
75-3552	11-4710	1	FHSCS	M4 x 0.7	10.00mm	14159	1	Slide-In Economy T-Nut Block	—	—	.005 lb
75-3562	11-4712	1			12.00mm	11-4065	1	Hex Nut	11-6039	1	.004 lb

M4 x 0.7 Socket Head Cap Screw (SHCS)

Assy. No.	Bolt	Qty.	Bolt Type	Thread Size	Bolt Length	Nut	Qty.	Nut Type	Washer	Qty.	Weight
75-3556	11-4510	1	SHCS	M4 x 0.7	10.00mm	14164	1	Standard Drop-In T-Nut	—	—	.0031 kg
75-3563	11-4512	1			12.00mm	13123	1	Standard Drop-In T-Nut	—	—	.0099 kg
75-3558	11-4516	1			16.00mm	11-4065	1	Hex Nut	11-6039	1	.021 lb

M5 x 0.8 Button Head Socket Cap Screw (BHSCS)

Assy. No.	Bolt	Qty.	Bolt Type	Thread Size	Bolt Length	Nut	Qty.	Nut Type	Washer	Qty.	Weight
75-3581	11-5308	1	BHSCS	M5 X 0.8	8.00mm	14122	1	Slide-In Economy T-Nut Block	—	—	.010 lb
75-3656	13-5310	1			10.00mm	14122	1	Slide-In Economy T-Nut Block	—	—	.008 lb
75-3539	11-5312	1			12.00mm	3871	1	Standard Slide-In T-Nut	—	—	.013 lb
75-3583	11-5312	1			12.00mm	3930	1	Standard Drop-In T-Nut	—	—	.009 lb
75-3576	11-5314	1			14.00mm	11-5065	1	Hex Nut	11-6040	1	.009 lb
75-3540	11-5316	1			16.00mm	11-5065	1	Hex Nut	11-6040	1	.009 lb

M5 x 0.8 Flat Head Socket Cap Screw (FHSCS)

Assy. No.	Bolt	Qty.	Bolt Type	Thread Size	Bolt Length	Nut	Qty.	Nut Type	Washer	Qty.	Weight
75-3571	11-5708	1	FHSCS	M5 X 0.8	8.00mm	14122	1	Slide-In Economy T-Nut Block	—	—	.010 lb
75-3572	11-5710	1			10.00mm	14122	1	Slide-In Economy T-Nut Block	—	—	.007 lb
75-3573	11-5714	1			14.00mm	11-5065	1	Hex Nut	11-6040	1	.008 lb
75-3574	11-5714	1			14.00mm	3930	1	Standard Drop-In T-Nut	—	—	.012 lb
75-3575	11-5716	1			16.00mm	3930	1	Standard Drop-In T-Nut	—	—	.012 lb

M5 x 0.8 Socket Head Cap Screw (SHCS)

Assy. No.	Bolt	Qty.	Bolt Type	Thread Size	Bolt Length	Nut	Qty.	Nut Type	Washer	Qty.	Weight
75-3401	13-5510	1	SHCS	M5 X 0.8	10.00mm	25-1951	1	Slide-In Economy T-Nut - Offset Thread	—	—	.012 lb
75-3578	11-5512	1			12.00mm	14122	1	Slide-In Economy T-Nut Block	—	—	.009 lb
75-3400	13-5516	1			16.00mm	13-5065	1	Hex Nut	13-6040	1	.011 lb
75-3483	11-5516	1			16.00mm	13116	1	Standard Drop-In T-Nut	11-6040	1	.009 lb
75-3481	11-5520	1			20.00mm	13127	1	Standard Drop-In T-Nut	11-6040	1	.012 lb

80/20® BUILD YOUR IDEA
More on 80/20® products available at 8020.net

Standard Tube Insert

- Connects profiles together when lengths are divisible by 1.50”
- Required no machining when used with Ready Tube profiles with predrilled holes

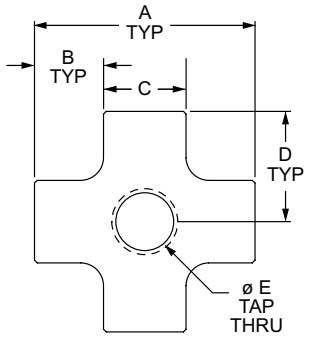

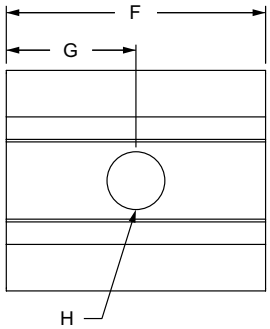

Part No.	Series	Material	Finish	A	B	C	D	E (Thread)	F	G	H	Weight
4600	RT	Aluminum	Mill	1.225”	.382”	.459”	.613”	5/16-18	1.380”	.690”	.332”	.108 lb
4615	RT			1.225”	.382”	.459”	.613”	5/16-18	1.440”	.720”	5/16-18	.112 lb
4601	RT			1.225”	.382”	.459”	.613”	M8 x 1.25	1.440”	.720”	.332”	.112 lb
4616	RT			1.225”	.382”	.459”	.613”	M8 x 1.25	1.440”	.720”	M8 x 1.25	.112 lb

Suggested Hardware

Insert	Part No.	Series	Qty.	Description
4600	3970	RT	1	5/16-18 x 1.75” Flanged Hex Head Bolt Assembly
	3753	RT	1	5/16-18 x 2.00” Flanged Hex Head Bolt
4615	3750	RT	1	5/16-18 x 1.25” Flanged Hex Head Bolt
	3753	RT	1	5/16-18 x 2.00” Flanged Hex Head Bolt
4601	3963	RT	1	M8 x 50.00mm Flanged Hex Head Bolt Assembly
	13-3753	RT	1	M8 x 50.00mm Flanged Hex Head Bolt
4616	13-3943	RT	1	M8 x 30.00mm BHSCS
	13-3945	RT	1	M8 x 45.00mm BHSCS

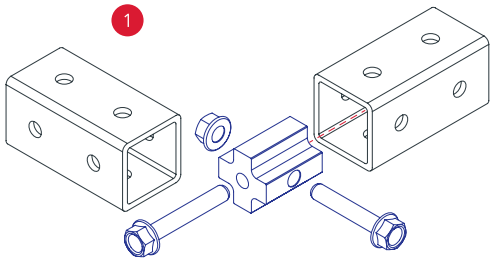

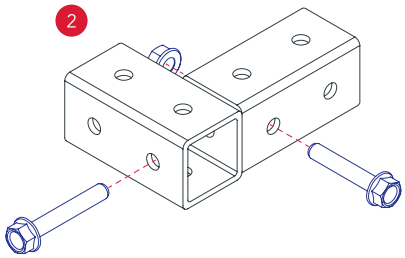

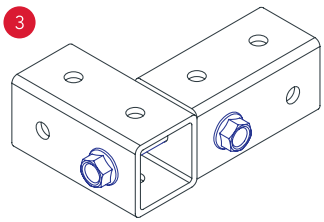

Ready Tube® Fasteners

Extended Tube Insert

- Connects profiles together when lengths are not divisible by 1.50”
- Required no machining when used with Ready Tube profiles with predrilled holes

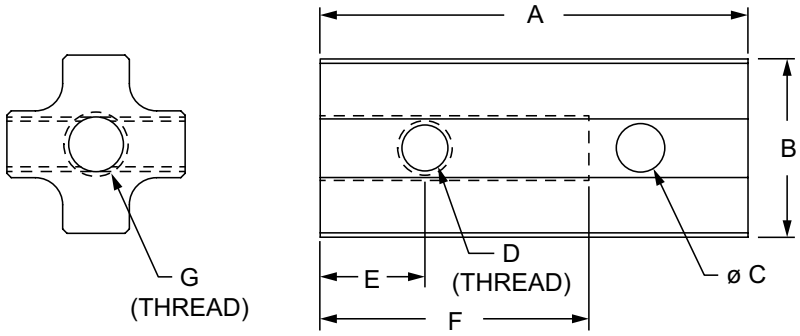

Part No.	Series	Material	Finish	A	B	C	D (Thread)	E	F	G (Thread)	Weight
4605	RT	Aluminum	Mill	2.940”	1.225”	.332”	5/16-18	.720”	2.000”	5/16-18	.233 lb
4606	RT		Mill	2.940”	1.225”	.332”	M8 x 1.25	.720”	2.000”	M8 x 1.25	.231 lb
4607	RT		Mill	2.940”	1.225”	.332”	5/16-18	.720”	2.000”	3/8-16	.227 lb
4608	RT		Mill	2.940”	1.225”	.332”	M8 x 1.25	.720”	2.000”	M10 x 1.5	.224 lb
4609	RT		Mill	2.940”	1.225”	.332”	5/16-18	.720”	2.000”	7/16-14	.221 lb
4610	RT		Mill	2.940”	1.225”	.332”	M8 x 1.25	.720”	2.000”	M12 x 1.75	.213 lb
4611	RT		Mill	2.940”	1.225”	.332”	5/16-18	.720”	2.000”	1/2-13	.210 lb

Suggested Hardware

Insert	Part No.	Series	Qty.	Description		Part No.	Description
4605, 4607, 4609, 4611	3970	RT	1	5/16-18 x 1.75” Flanged Hex Head Bolt Assembly	OR	9760	Roll Pin
	3753	RT	1	5/16-18 x 2.00” Flanged Hex Head Bolt			
4606, 4608, 4610	13-3945	RT	1	M8 x 45.00mm BHSCS			
	3963	RT	1	M8 Flanged Hex Nut			
				M8 x 50.00mm Flanged Hex Head Bolt			

80/20 BUILD YOUR IDEA
More on 80/20® products available at 8020.net

Standard Tube Insert Kit with Hex Nut

- Connects profiles together when lengths are divisible by 1.50”
- Required no machining when used with Ready Tube profiles with predrilled holes

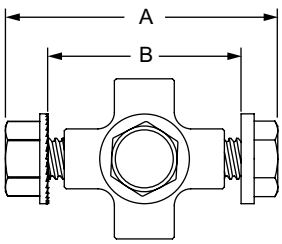

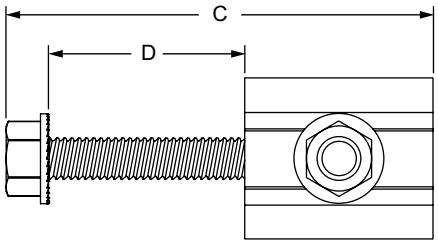

Part No.	Series	Material	Finish	Thread	A	B	C	D	Weight
4701	RT	Aluminum	Mill	5/16-18	2.062”	1.500”	3.226”	1.500”	.219 lb

Included Hardware

Insert	Part No.	Series	Qty.	Description
4701	4600	RT	1	5/16-18 Standard Tube Insert
	3970	RT	1	5/16-18 x 1.75” Flanged Hex Head Bolt Assembly
	3753	RT	1	5/16-18 x 2.00” Flanged Hex Head Bolt

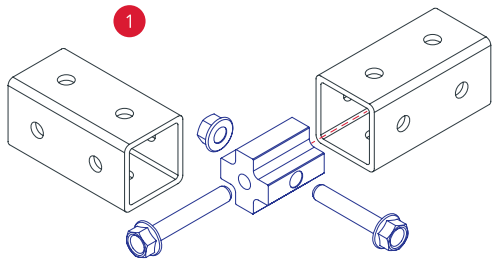

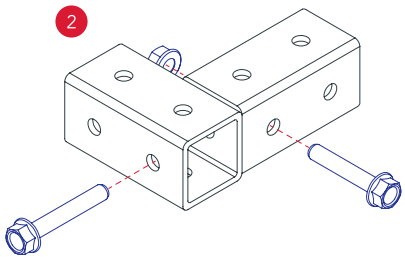

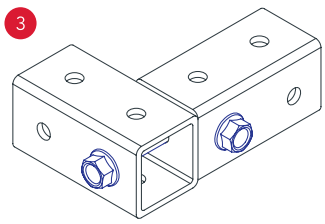

Ready Tube® Fasteners

Standard Tube Insert Kit with Roll Pin

- Connects profiles together when lengths are divisible by 1.50”
- Required no machining when used with Ready Tube profiles with predrilled holes
- Install with Roll Pin Punch tool

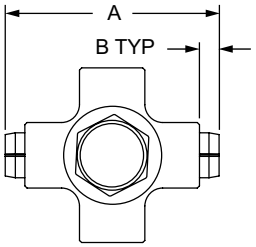

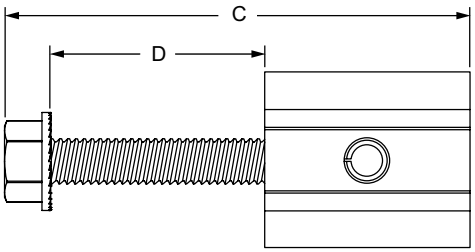

Part No.	Series	Material	Finish	Thread	A	B	C	D	Weight
4700	RT	Aluminum	Mill	5/16-18	1.500”	.138”	3.226”	1.500”	.186 lb
4702	RT		Mill	M8 x 1.25”	1.500”	.138”	3.226”	1.500”	.186 lb

Included Hardware

Insert	Part No.	Series	Qty.	Description
4700	4600	RT	1	5/16-18 Standard Tube Insert
	9760	RT	1	Roll Pin
	3753	RT	1	5/16-18 x 2.00” Flanged Hex Head Bolt
4702	4601	RT	1	M8 x 1.25” Standard Tube Insert
	9760	RT	1	Roll Pin
	13-3753	RT	1	M8 x 50.00mm Flanged Hex Head Bolt

Recommended Tool

Part No.	Roll Pin Punch
6117	

Roll Pin

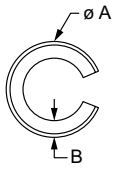

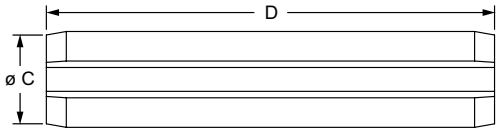

Part No.	Series	Material	Finish	A	B	C	D	Weight
9760	RT	Steel	Bright Zinc	.341”	.059”	.315”	1.500”	.019 lb

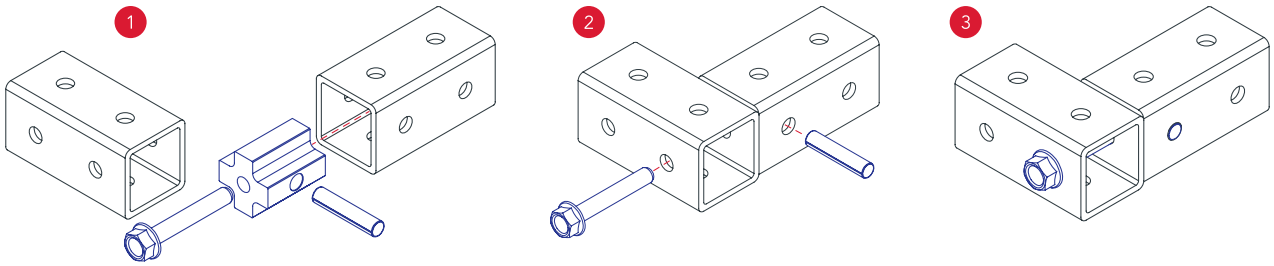

80/20 BUILD YOUR IDEA
More on 80/20® products available at 8020.net

Anti-Rotation Plate

- Used with flanged Ready Tube profiles to prevent offset loads from twisting

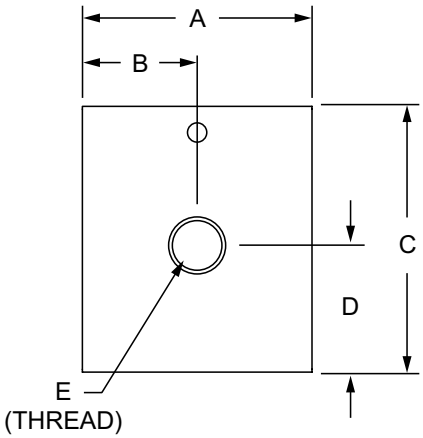

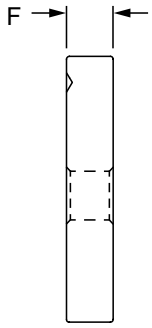

Part No.	Series	Material	Finish	A	B	C	D	E (Thread)	F	Weight
4625	RT	Aluminum	Clear Anodize	1.230"	.615"	1.490"	.745"	5/16-18	.250"	.044 lb
4625-Black	RT		Black Anodize	1.230"	.615"	1.490"	.745"	5/16-18	.250"	.044 lb
4626	RT		Clear Anodize	31.21mm	15.62mm	37.85mm	18.92mm	M8 x 1.25	6.35mm	.042 lb
4626-Black	RT		Black Anodize	31.21mm	15.62mm	37.85mm	18.92mm	M8 x 1.25	6.35mm	.042 lb

Suggested Hardware (Mount to RT Profile)

Part No.	Series	Qty.	Bolt
3752	F	1	5/16-18 x 1.75" Flanged Hex Bolt
13-3945	M	1	M8 x 1.25 BHSCS

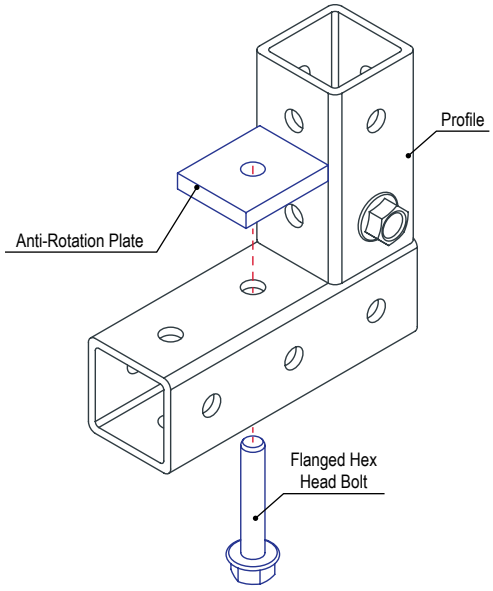

Quick Frame® Fasteners

2 Way - Butt Connector

- Connects profiles end to end; See how Quick Frame works (pg. 3-11)
- No machining or additional hardware required; Install with soft-faced mallet (pg. 11-6)

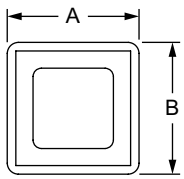

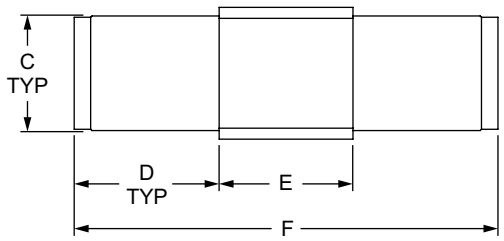

Part No.	Series	Material	Process	Color	A	B	C	D	E	F	Weight
9115	QF	Nylon	Injection Molded	Gray	1.100"	1.100"	.870"	1.100"	1.000"	3.200"	.061 lb
9215	QF			Black	1.100"	1.100"	.870"	1.100"	1.000"	3.200"	.059 lb

2 Way - Corner Connector

- Creates a 90 degree flush connection; See how Quick Frame works (pg. 3-11)
- No machining or additional hardware required; Install with soft-faced mallet (pg. 11-6)

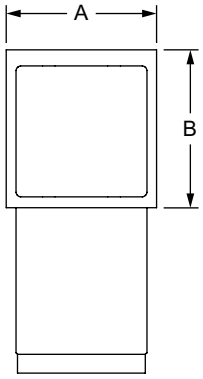

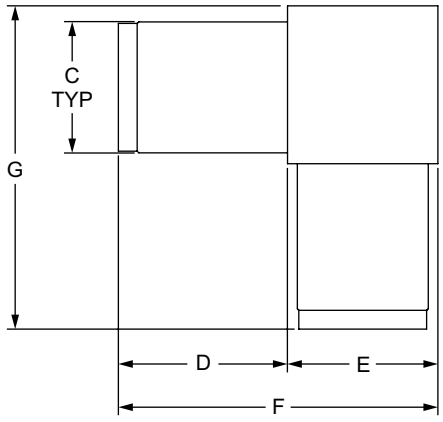

Part No.	Series	Material	Process	Color	A	B	C	D	E	F	G	Weight
9120	QF	Nylon	Injection Molded	Gray	1.000"	1.000"	.870"	1.125"	1.000"	2.125"	2.125"	.065 lb
9220	QF			Black	1.000"	1.000"	.870"	1.125"	1.000"	2.125"	2.125"	.061 lb

80/20 BUILD YOUR IDEA
More on 80/20® products available at 8020.net

90 Degree Straight Base Connector

- Straight mount at a 90 degree angle to any flat surface; See how Quick Frame works (pg. 3-11)
- No machining or additional hardware required; Install with soft-faced mallet (pg. 11-6)

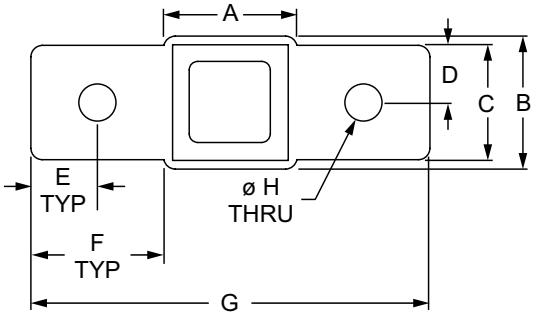

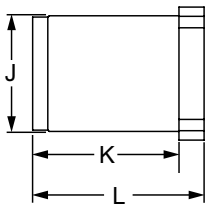

Part No.	Series	Material	Process	Color	A	B	C	D	E	F	G	H	J	K	L	Weight
9140	QF	Nylon	Injection Molded	Gray	1.000"	1.000"	.860"	.430"	.500"	1.000"	3.000"	.281"	.870"	.840"	1.030"	.028 lb
9240	QF			Black	1.000"	1.000"	.860"	.430"	.500"	1.000"	3.000"	.281"	.870"	.840"	1.030"	.028 lb

90 Degree Corner Base Connector

- Corner mount at a 90 degree angle to any flat surface; See how Quick Frame works (pg. 3-11)
- No machining or additional hardware required; Install with soft-faced mallet (pg. 11-6)

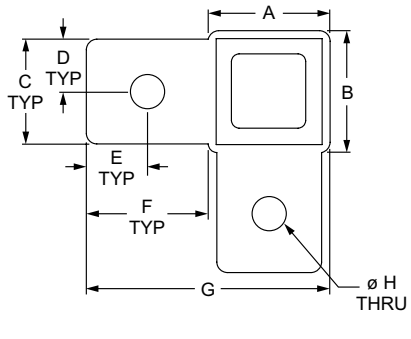

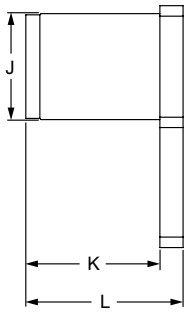

Part No.	Series	Material	Process	Color	A	B	C	D	E	F	G	H	J	K	L	Weight
9242	QF	Nylon	Injection Molded	Black	1.000"	1.000"	.860"	.430"	.500"	1.000"	2.000"	.281"	.870"	1.100"	1.290"	.028 lb

Quick Frame® Fasteners

3 Way - Tee Connector

- Connects three profiles with a 90 degree tee connection; See how Quick Frame works (pg. 3-11)
- No machining or additional hardware required; Install with soft-faced mallet (pg. 11-6)

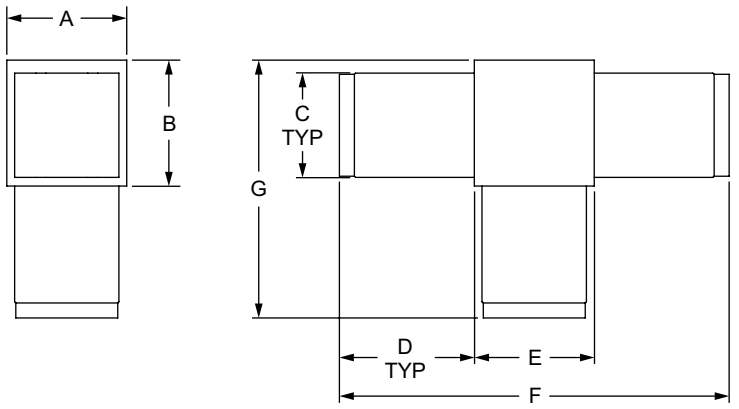

Part No.	Series	Material	Process	Color	A	B	C	D	E	F	G	Weight
9130	QF	Nylon	Injection Molded	Gray	1.000"	1.050"	.870"	1.125"	1.000"	3.250"	2.150"	.082 lb
9230	QF			Black	1.000"	1.050"	.870"	1.125"	1.000"	3.250"	2.150"	.082 lb

3 Way - Corner Connector

- Connects three profiles with a 90 degree corner connection; See how Quick Frame works (pg. 3-11)
- No machining or additional hardware required; Install with soft-faced mallet (pg. 11-6)

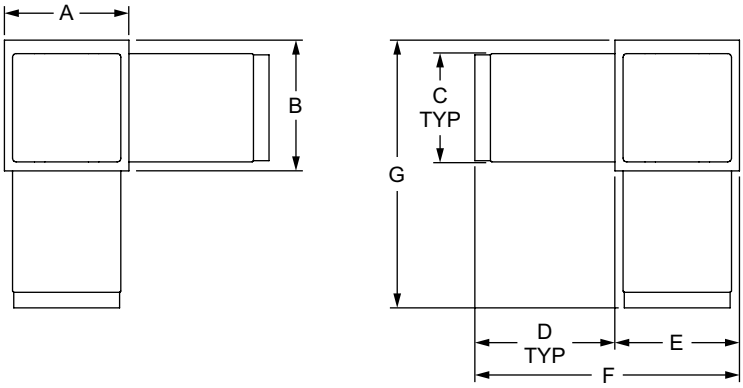

Part No.	Series	Material	Process	Color	A	B	C	D	E	F	G	Weight
9150	QF	Nylon	Injection Molded	Gray	1.000"	1.000"	.870"	1.125"	1.000"	2.125"	2.100"	.099 lb
9250	QF			Black	1.000"	1.000"	.870"	1.125"	1.000"	2.125"	2.100"	.080 lb

80/20 BUILD YOUR IDEA
More on 80/20® products available at 8020.net

4 Way - Cross Connector

- Connects four profiles to form 90 and 180 degree connections; See how Quick Frame works (pg. 3-11)
- No machining or additional hardware required; Install with soft-faced mallet (pg. 11-6)

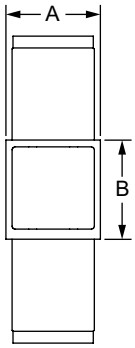

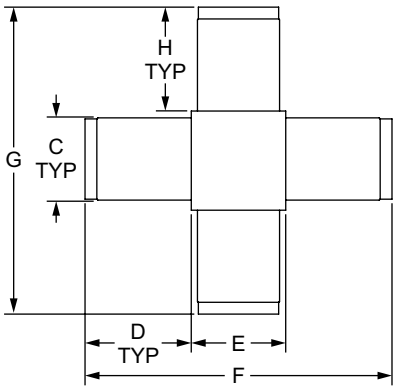

Part No.	Series	Material	Process	Color	A	B	C	D	E	F	G	H	Weight
9160	QF	Nylon	Injection Molded	Gray	1.000"	1.000"	.870"	1.125"	1.000"	3.250"	3.250"	1.110"	.124 lb
9260	QF			Black	1.000"	1.000"	.870"	1.125"	1.000"	3.250"	3.250"	1.110"	.099 lb

4 Way - Corner Connector

- Connects four profiles to form 90 and 180 degree connections; See how Quick Frame works (pg. 3-11)
- No machining or additional hardware required; Install with soft-faced mallet (pg. 11-6)

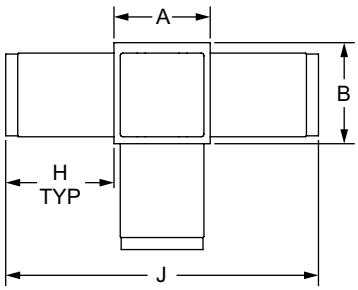

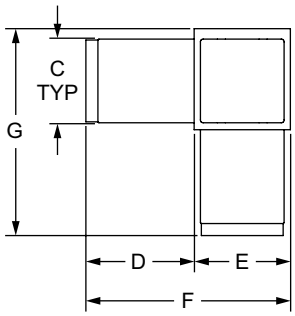

Part No.	Series	Material	Process	Color	A	B	C	D	E	F	G	H	J	Weight
9170	QF	Nylon	Injection Molded	Gray	1.000"	1.000"	.870"	1.125"	1.000"	2.125"	2.100"	1.125"	3.250"	.100 lb
9270	QF			Black	1.000"	1.000"	.870"	1.125"	1.000"	2.125"	2.100"	1.125"	3.250"	.100 lb

Quick Frame® Fasteners

5 Way - Junction Connector

- Connects five profiles to form 90 and 180 degree connections; See how Quick Frame works (pg. 3-11)
- No machining or additional hardware required; Install with soft-faced mallet (pg. 11-6)

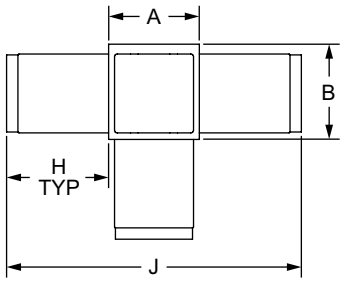

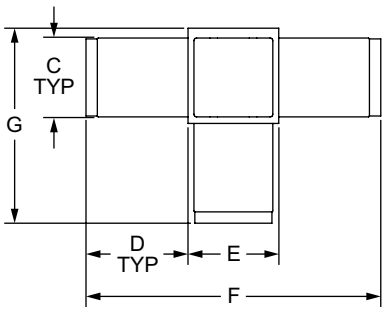

Part No.	Series	Material	Process	Color	A	B	C	D	E	F	G	H	J	Weight
9180	QF	Nylon	Injection Molded	Gray	1.000"	1.000"	.870"	1.125"	1.000"	3.250"	2.125"	1.125"	3.250"	.124 lb
9280	QF			Black	1.000"	1.000"	.870"	1.125"	1.000"	3.250"	2.125"	1.125"	3.250"	.123 lb

6 Way - Junction Connector

- Connects six profiles to form 90 and 180 degree connections; See how Quick Frame works (pg. 3-11)
- No machining or additional hardware required; Install with soft-faced mallet (pg. 11-6)

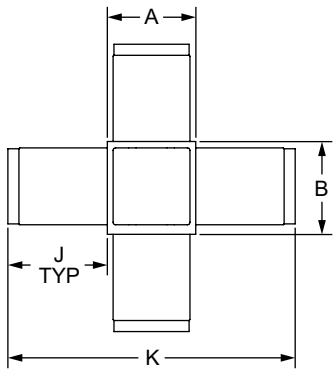

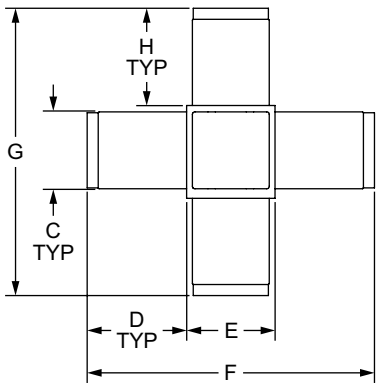

Part No.	Series	Material	Process	Color	A	B	C	D	E	F	G	H	J	K	Weight
9190	QF	Nylon	Injection Molded	Gray	1.000"	1.000"	.870"	1.125"	1.000"	3.250"	3.250"	1.100"	1.125"	3.250"	.135 lb
9290	QF			Black	1.000"	1.000"	.870"	1.125"	1.000"	3.250"	3.250"	1.100"	1.125"	3.250"	.138 lb

80/20 BUILD YOUR IDEA
More on 80/20® products available at 8020.net

Caster or Spacer Receptacle Insert

- Enables mounting of casters or addition of spacers; See how Quick Frame works (pg. 3-11)
- No machining or additional hardware required; Install with soft-faced mallet (pg. 11-6)

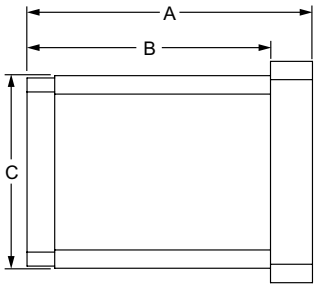

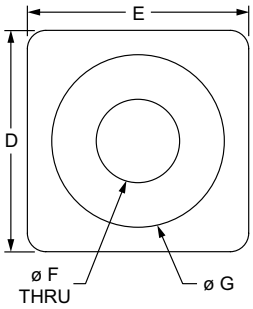

Part No.	Series	Material	Process	Color	A	B	C	D	E	F	G	Weight
9113	QF	Nylon	Injection Molded	Gray	1.290"	1.100"	.870"	1.000"	1.000"	.375"	.780" x .190" deep	.025 lb
9213	QF			Black	1.290"	1.100"	.870"	1.000"	1.000"	.375"	.780" x .190" deep	.026 lb

2 Way - Spacer

- Used with receptacle insert to add space between profiles; See how Quick Frame works (pg. 3-11)
- No machining or additional hardware required; Install with soft-faced mallet (pg. 11-6)

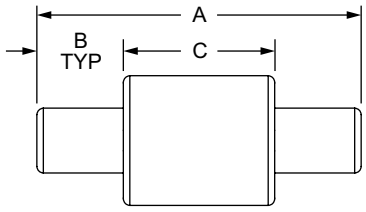

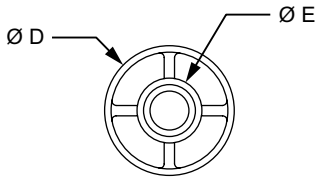

Part No.	Series	Material	Process	Color	A	B	C	D	E	Weight
9198	QF	Nylon	Injection Molded	Gray	1.875"	.500"	.870"	.770"	.375"	.013 lb

Profile to Profile

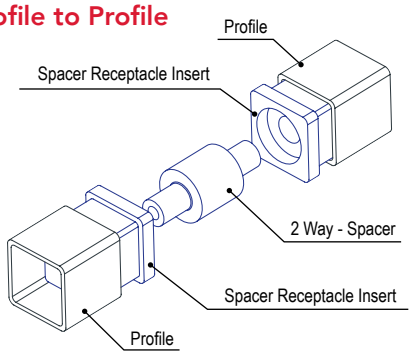

Profile to Caster

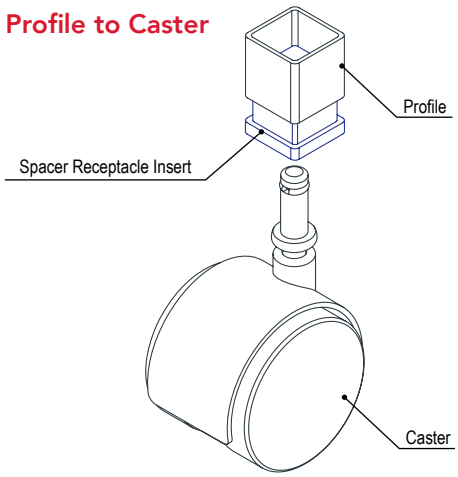

Quick Frame® Fasteners

3 Way - Corner Connector with Caster or Spacer Receptacle

- Enables mounting of casters or addition of spacers; See how Quick Frame works (pg. 3-11)
- No machining or additional hardware required; Install with soft-faced mallet (pg. 11-6)

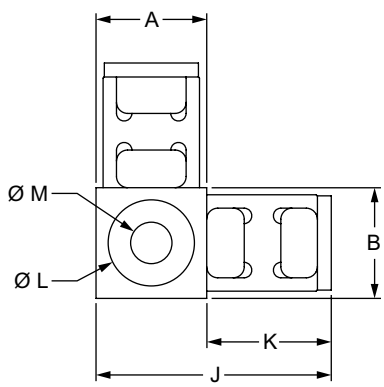

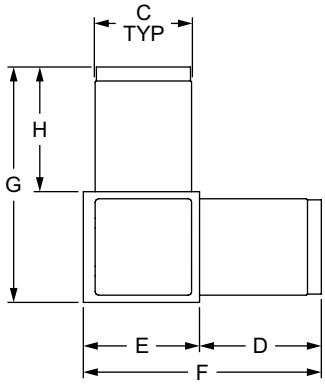

Part No.	Series	Material	Process	Color	A	B	C	D	E	F	G	H	J	K	L	M	Weight
9153	QF	Nylon	Injection Molded	Gray	1.000"	1.000"	.870"	1.100"	1.050"	2.125"	2.125"	1.125"	2.125"	1.125"	.780" x .190" deep	.375" x 1.375" deep	.092 lb
9253	QF			Black	1.000"	1.000"	.870"	1.100"	1.050"	2.125"	2.125"	1.125"	2.125"	1.125"	.780" x .190" deep	.375" x 1.375" deep	.096 lb

Profile to Caster

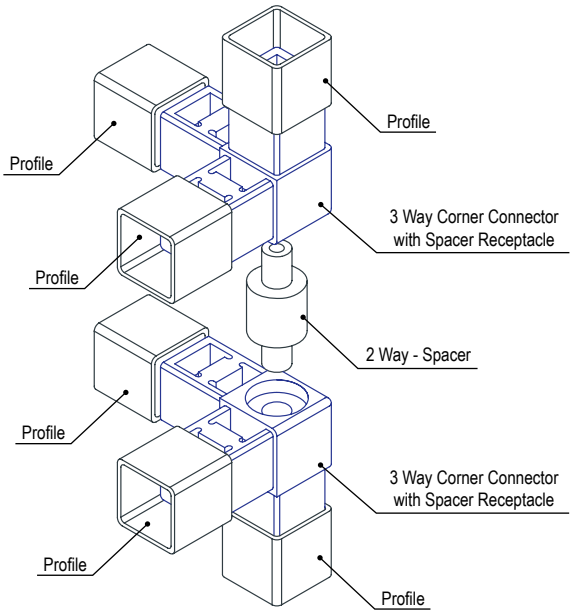

Profile to Profile

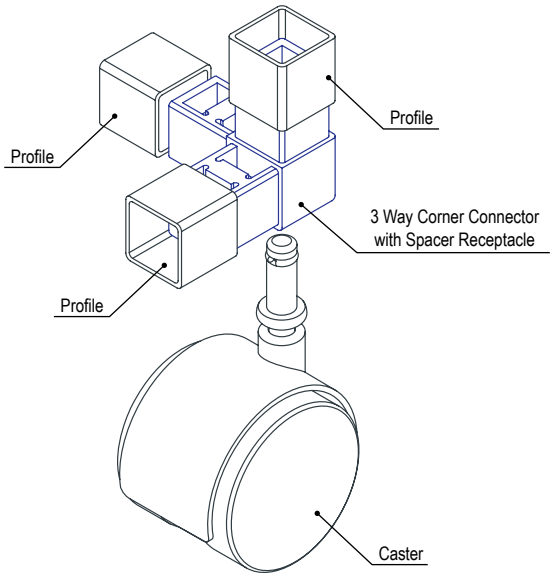

80/20 BUILD YOUR IDEA
More on 80/20® products available at 8020.net

3 Way - Hexagon Segment Connector

- Connects three profiles to form a 120 degree corner connection; See how Quick Frame works (pg. 3-11)
- No machining or additional hardware required; Install with soft-faced mallet (pg. 11-6)

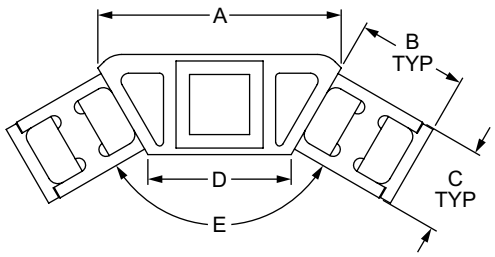

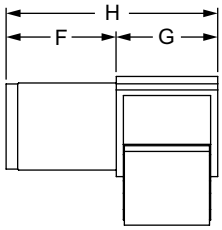

Part No.	Series	Material	Process	Color	A	B	C	D	E	F	G	H	Weight
9273	QF	Nylon	Injection Molded	Black	2.400"	1.105"	.870"	1.375"	120°	1.100"	1.102"	2.202"	.104 lb

60 Degree Hexagon Side and Top Connector

- Connects four profiles to form a 120 degree corner connection; provides 20 degree top pitch
- No machining or additional hardware required; Install with soft-faced mallet (pg. 11-6)

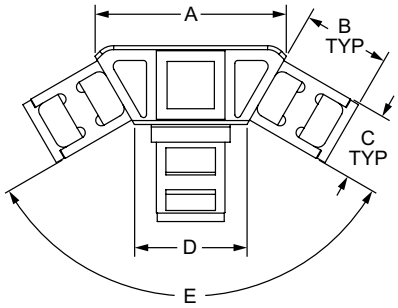

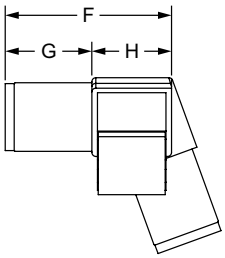

Part No.	Series	Material	Process	Color	A	B	C	D	E	F	G	H	Weight
9275	QF	Nylon	Injection Molded	Black	2.430"	1.100"	.870"	1.430"	120°	2.112"	1.100"	1.012"	.136 lb

Quick Frame® Fasteners

30 Degree Hexagon Straight Base Connector

- Straight mount at a 30 degree angle to any flat surface; See how Quick Frame works (pg. 3-11)
- No machining or additional hardware required; Install with soft-faced mallet (pg. 11-6)

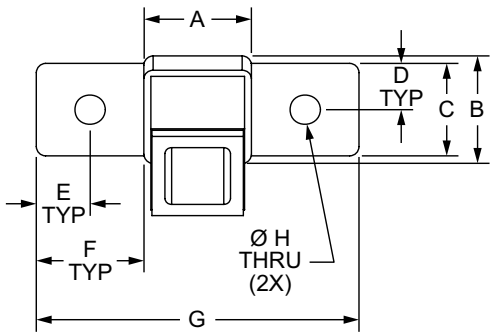

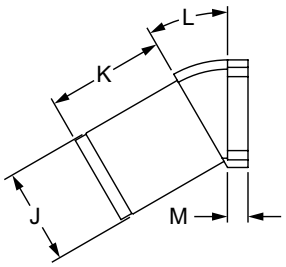

Part No.	Series	Material	Process	Color	A	B	C	D	E	F	G	H	J	K	L	M	Weight
9245	QF	Nylon	Injection Molded	Black	1.000"	1.000"	.860"	.430"	.500"	1.000"	3.000"	.281"	.870"	1.100"	30°	.190"	.043 lb

Quick Frame to 10 Series Transition Tee

- Used to transition from 1" x 1" T-slotted profile to Quick Frame profiles
- No machining or additional hardware required; Install with soft-faced mallet (pg. 11-6)

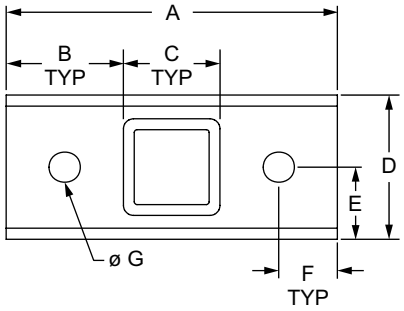

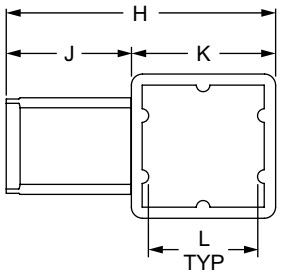

Part No.	Series	Material	Process	Color	A	B	C	D	E	F	G	H	J	K	L	Weight
9330	10 to QF	Nylon	Injection Molded	Black	3.000"	1.065"	.870"	1.300"	.650"	.528"	.281"	2.425"	1.125"	1.300"	1.000"	.077 lb

Suggested Hardware (Mount to T-Slot)

Part No.	Series	Qty.	Bolt	T-Nut
3386	10	2	1/4-20 x 3/8" FBHSCS	Slide-In

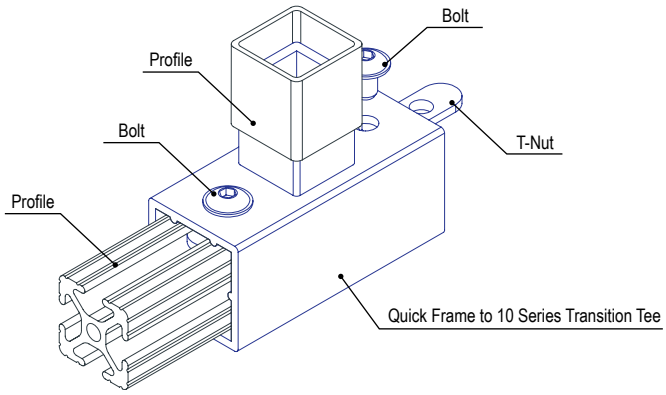

80/20 BUILD YOUR IDEA
More on 80/20® products available at 8020.net

Introduction to Panels and Doors
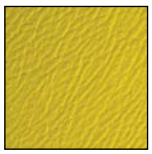
Page 4-4

How Panels are Used with T-slot?

Page 4-5

Panel & Mesh Mounting Options
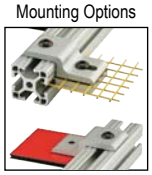
Page 4-5

Tips for Ordering Panels

Page 4-7

Motion Within the T-slot
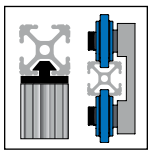
Page 4-7

Hinge Options

Page 4-8

Bi-fold Configure
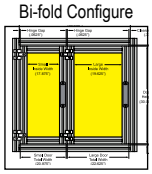
Page 4-9

Panel Types

Acrylic Panels
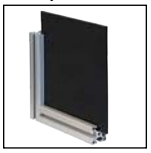
Page 4-10

AR Polycarbonate

Page 4-11

ESD Polycarbonate

Page 4-11

Recycled Polycarbonate

Page 4-11

Polycarbonate
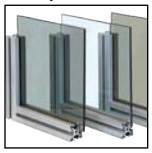
Page 4-12

ABS Haircell

Page 4-13

Polyvinyl Chloride/ Acrylic Panels
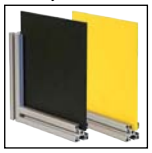
Page 4-14

Expanded PVC

Page 4-15

Aluminum Composite Panels

Page 4-16

Lite Aluminum Composite Panels

Page 4-17

Twin Wall Polycarbonate

Page 4-18

HDPE Panels
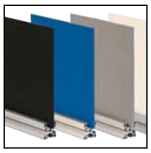
Page 4-19

HDPE Pegboard

Page 4-20

Phenolic Resin
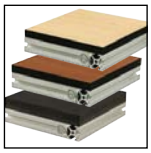
Page 4-21

Solid Aluminum Plate
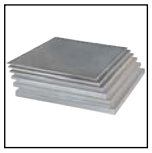
Page 4-22

Diamond Tread Plate

Page 4-23

Laminated Tabletops

Page 4-24

Expanded Metal
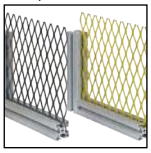
Page 4-25

Wire Mesh Panels
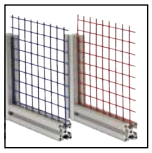
Page 4-26

Thermoplastic Coated Wire Mesh
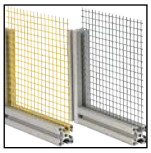
Page 4-27

Blocks, Clamps, Brackets, and Retainers

Aluminum Panel Mount Block

Page 4-28

Detent Hinge Stopper

Page 4-30

Drop-in Lite Panel Mount Block

Page 4-31

Lite Panel Mount Block

Page 4-32

Lite Panel Mount Block Spacer

Page 4-33

Adjustable Panel Mount Block

Page 4-34

Quick Change Panel Clamp

Page 4-35

Roll-in Panel Mount Bracket

Page 4-36

Panel Mount Bracket

Page 4-37

Single Panel Holder

Page 4-38

Snap On Panel Retainer

Page 4-39

Single Arm Narrow Panel Retainer

Page 4-40

Single Arm Wide Panel Retainer

Page 4-42

Double Arm Narrow Panel Retainer

Page 4-44

Single Arm Narrow Mesh Retainer

Page 4-46

Single Arm Wide Mesh Retainer

Page 4-48

Panels & Doors

Double Arm Narrow Mesh Retainer

Page 4-50

Double Arm Wide Mesh Retainer

Page 4-51

Narrow & Wide Backing Plate

Page 4-52

Single Arm Narrow Mesh Retainer with Narrow Backing Plate

Page 4-54

Single Arm Wide Mesh Retainer with Wide Backing Plate

Page 4-55

Double Arm Narrow Mesh Retainer with Narrow Backing Plate

Page 4-56

Double Arm Wide Mesh Retainer with Wide Backing Plate

Page 4-57

Tabletop Fastening Kit

Page 4-58

Roll-in Mesh Panel Retainer

Page 4-59

Straddle Mesh Retainer

Page 4-60

Wire Mesh Fastener

Page 4-61

Hinges and Roller Wheels

Economy Sliding Door Glide

Page 4-62

Standard Sliding Door Glide

Page 4-63

Standard Sliding Door Glide Profile

Page 4-64

Upper Door Slide Track

Page 4-65

Lower Door Slide Track

Page 4-65

Roller Wheels

Page 4-66

Dual Roller Wheel Bracket

Page 4-68

Dual Roller Wheel Bracket Assembly

Page 4-69

Standard Lift-Off Hinge - Right Hand with Single Long Pin

Page 4-70

Standard Lift-Off Hinge - Right Hand with Single Short Pin

Page 4-71

Standard Lift-Off Hinge - Left Hand with Single Long Pin

Page 4-72

Standard Lift-Off Hinge - Left Hand with Single Short Pin

Page 4-73

Standard Lift-Off Hinge - Mating Hub

Page 4-74

Standard Lift-Off Hinge with Double Short Pins

Page 4-75

Standard Lift-Off Hinge - Right Hand Assembly

Page 4-76

Standard Lift-Off Hinge - Left Hand Assembly

Page 4-77

Standard Captive Lift-Off Hinge Assembly

Page 4-78

Economy Lift-Off Hinge Right Hand with Short Pin

Page 4-79

Economy Lift-Off Hinge Right Hand with Long Pin

Page 4-80

Economy Lift-Off Hinge Left Hand with Short Pin

Page 4-81

Economy Lift-Off Hinge Left Hand with Long Pin

Page 4-82

Economy Lift-Off Hinge Assembly

Page 4-83

4 Hole - Concealed Hinge

Page 4-84

4 Hole - Dual Hand Lift-Off Hinge

Page 4-85

4 Hole - Plastic Lift-Off Hinge

Page 4-86

2 Hole - Plastic Lift-Off Hinge

Page 4-88

3 Hole - Plastic Double Lift-Off Hinge

Page 4-89

4 Hole - Adjustable Hinge

Page 4-90

4 Hole - Adjustable Tension Panel Hinge

Page 4-91

4 Hole - Detent Panel Hinge

Page 4-92

4 Hole - Detent Positioning Hinge

Page 4-93

4 Hole - Constant Friction Hinge

Page 4-94

4 Hole - Aluminum Hinge

Page 4-95

2 Hole - Standard Plastic Hinge

Page 4-96

4 Hole - Standard Plastic Hinge

Page 4-97

4 Hole - Horizontal Adjustment Plastic Hinge

Page 4-98

4 Hole - Standard Plastic Hinge with Snap Cover

Page 4-99

4 Hole - Economy Zinc Hinge

Page 4-100

4 Hole - Transition Hinge

Page 4-101

4 Hole - Standard Stainless Steel Hinge

Page 4-102

4 Hole - Zinc Hinge

Page 4-103

4 Hole - Locking Zinc Hinge

Page 4-104

4 Hole - Slotted Zinc Hinge

Page 4-105

4 Hole - Slotted Locking Zinc Hinge

Page 4-106

Lite Panel Hinge

Page 4-107

Handles and Latches

Plastic Door Handle

Page 4-108

Offset Plastic Handle

Page 4-109

Ergonomic Plastic Handle

Page 4-110

Aluminum Door Handle

Page 4-111

Ready Tube® Aluminum Handle

Page 4-112

Steel Door Handle

Page 4-113

Flush Plastic Panel Handle

Page 4-114

Aluminum Handle
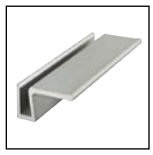
Page 4-115

Locking Plastic Panel Grabber™ Handle

Page 4-116

Deluxe Door Handle with Pawl Kit

Page 4-117

Deluxe Door Handle Mating Handle

Page 4-118

Furniture Style Handle

Page 4-119

Furniture Style Handle Pawl Kit

Page 4-121

Slam Latch

Page 4-122

Velcro® Latch

Page 4-123

0 Degree Deadbolt Latch

Page 4-124

90 Degree Deadbolt Latch

Page 4-125

Grabber™ Door Catch

Page 4-126

Grabber™ Door Catch Mounting Plate

Page 4-127

Magnetic Door Catch

Page 4-129

Magnetic Door Catch Bracket

Page 4-130

Nylon Magnetic Door Catch

Page 4-131

Single Ball Catch

Page 4-132

Double Ball Catch

Page 4-133

Tension Ball Latch

Page 4-134

Sliding Door Lock

Page 4-135

Panel Stiffener

Page 4-136

Standard Panel Gasket

Page 4-137

Economy Panel Gasket

Page 4-138

Rubber Door Seal

Page 4-139

Wire Edge

Page 4-140

Aluminum Door Stop

Page 4-141

Nylon Door Stop

Page 4-142

Panels & Doors

Introduction to Panels & Doors

80/20 has an extensive in-house panel shop with a wide variety of wire, mesh and plastic panels. Our panels are frequently integrated into design plans and builds. They are great for guarding, enclosures, desk tops and shelves, among other applications. 80/20 carries an impressive stock of roughly 100 panels in different sizes, shapes, thicknesses, colors, and materials. Keep in mind that 80/20 mesh, plastic panels, and aluminum plates are ordered by the square foot or square meter.

When deciding on your panel you'll want to make a thorough assessment of your needs. You will find that you have several choices to consider when incorporating paneling into your projects.

Optical Clarity

- Acrylic
- AR Polycarbonate
- ESD Polycarbonate
- Polycarbonate

Weather Resistance

- Acrylic
- Aluminum Composite
- Expanded PVC
- Twin Wall Polycarbonate

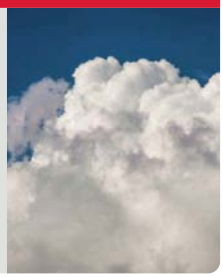

Machinability

- ABS Haircell
- Acrylic
- Expanded PVC
- HDPE
- Lite Aluminum Composite
- Polycarbonate

Textured

- ABS Haircell
- Diamond Tread Plate
- HDPE
- PVC/Acrylic

Chemical Resistance

- Acrylic
- Aluminum Composite
- Aluminum Plate
- Expanded PVC
- HDPE
- Lite Aluminum Composite

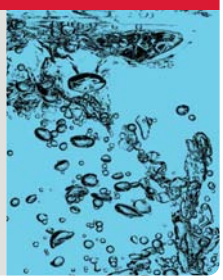

Impact Resistance

- Aluminum Composite
- Aluminum Plate
- AR Polycarbonate
- Lite Aluminum Composite
- Polycarbonate
- PVC/Acrylic

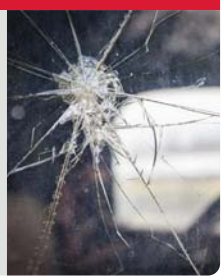

Expanded Metal & Wire Mesh

Expanded metal and wire mesh panels work well for guarding and enclosure applications where air flow is required. They provide a barrier and can be used to block off a machine, supplies, inventory, or equipment while still providing visual access. They are strong yet lightweight and are available in a range of materials and colors.

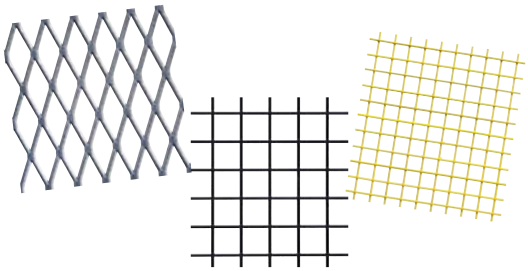

How Panels Are Used with T-Slot?

80/20 panels and mesh retainers can be used a couple different ways with T-slot profiles. You can either rest the panel in the T-slot or mount it flush with the T-slot profile. Guarding, enclosures, and access points lend themselves well to panels that rest within the profile while desks and furniture applications commonly have flush panels.

Tip: When sizing a panel that will be inserted into the T-slot, be sure to add extra material to your visible panel size.

Series	Add
10	.500"
15	.750"
20	10mm
25	14mm
30	15mm
40	22mm
45	24mm

Panel & Mesh Mounting Options

You have several options when it comes to mounting your panels and mesh. Consider your application; Is it being used to keep things in or out or both? Are you using a mesh panel? Will you be changing out the panel often? Will the project be used inside or outside?

The answer to these questions will help determine the type of mounting option you will want to use.

Retainers

Blocks

Gasket

Panels & Doors

Panel & Mesh Retainers

Retainers are easy to use and available in several sizes and shapes to fit your needs.

Panel Retainers:

- Strong
- Cost-effective
- Corrosion-resistant
- Indoor or Outdoor Use
- Requires drill-through hole in panel

Mesh Retainers:

- Strong
- Cost-effective
- Corrosion-resistant
- Indoor or Outdoor Use
- Includes a backing plate
- No machining required
- Slotted holes for adjustability

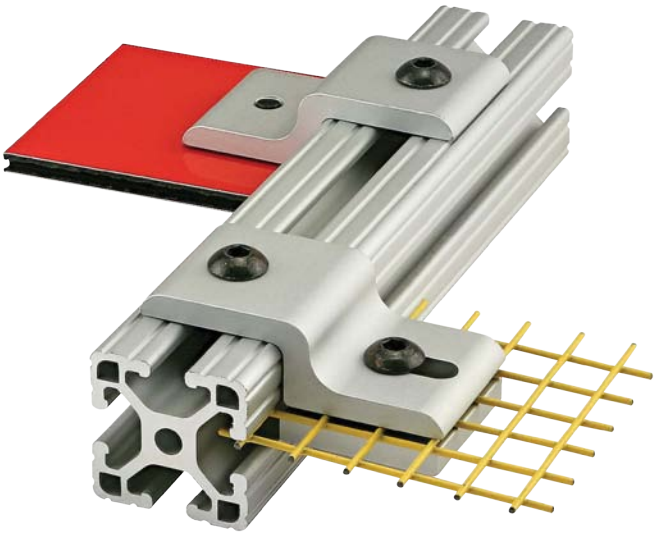

Panel Mount Blocks

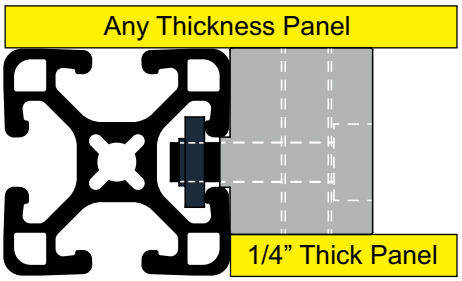

Panel mount blocks are a great way to mount your panel either flush with the profile or on the profile surface. They provide stability while reducing vibration and there are options available in aluminum or nylon.

Panel Gasket

Panel Gasket is used to it to help secure your panel and prevent it from rattling within the frame. Keep in mind that you only need to put panel gasket on one side of the panel. Here are a few other tips when using panel gasket:

- Cut your panel gasket 2-3 inches (50-76mm) longer than the opening to make the corners stay tight.
- When installing panel gasket, begin in the middle of your panel and work your way out.

Recommended Panel Thickness

Series	Panel Thickness
10	.177" / 4.50mm
15	.220" - .236" / 6.00mm
20	.118" / 3.00mm
25	.177" / 4.50mm
30	.220" - .236" / 6.00mm
40	.220" - .236" / 6.00mm
45	.220" - .236" / 6.00mm

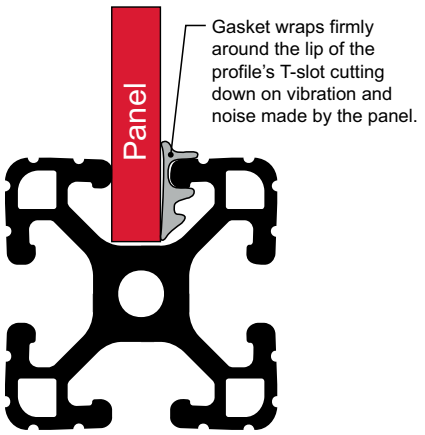

80/20 BUILD YOUR IDEA
More on 80/20® products available at 8020.net

Tips for Ordering Panels

Please note a drawing is required

Panel Orientation:
When ordering panels it is important to indicate orientation:

Expanded Metal: Specify horizontal or vertical diamond orientation.

Twin Wall Polycarbonate: Specify horizontal or vertical channel orientation.

Phenolic Resin: Specify horizontal or vertical woodgrain orientation.

Textured Side:
Panels like PVC/Acrylic and ABS Haircell have a textured and smooth side. When machining is needed it's important to indicate which is outward with "T" for textured or "S" for smooth.

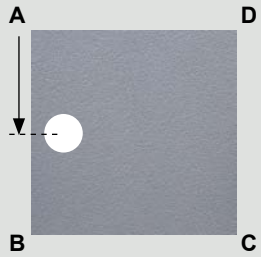

Machining Reference:
Beginning with the upper left corner, call outs are designated A, B, C, and D in a counterclockwise direction on panels. Referencing these call outs when ordering machining allows for proper measuring of the service position.

In this example, the service center line is measured down from A.

Motion within the T-slot

Door glides and roller wheels slide within the T-slot channel to enable movement of a door, panel, frame or other component. Create accessible displays or an entrance with a bi-fold door.

Glides are simple to use and bolt directly to a profile end to freely rotate as the door or application pivots. There is an option available that creates a bi-fold door without the use of a bottom rail.

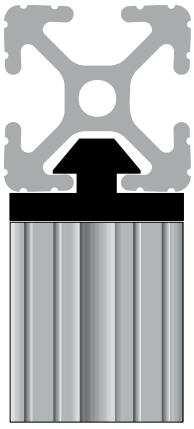

Roller wheels mount directly to a T-slot or profile end and are ideal for guided linear motion. They are made of self-lubricating nylon with a permanent lubricated bushing available which reduces maintenance time and cost.

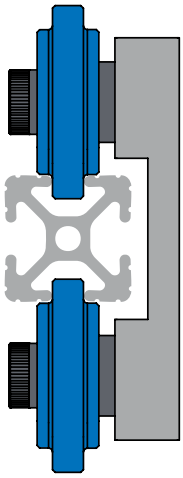

Panels & Doors

Variety of Hinge Options

80/20 offers a wide assortment of hinges in a variety of styles, materials, and sizes that can be mounted to a panel or profile to fit your requirements. From light to heavy-duty projects, there are a range of options available; choose from different materials such as plastic, zinc, or aluminum.

- Plastic hinges are typically used for lightweight doors and to connect plastic panels while aluminum hinges are a heavier-duty option.
- Lift-off hinges are popular as they can create a door that lifts off by using all right or all left lift-off hinges, or confine a door or access point by using a combination of left and right hinges.

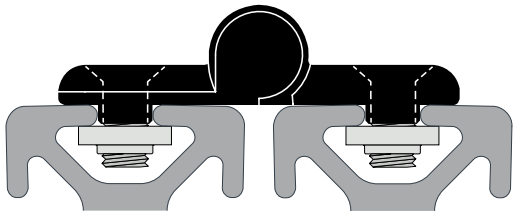

Tip: To increase its load-bearing capacity and prevent it from rotating, choose hinges with slot tabs or slot pins. If needed, the tabs and pins can be removed when, for example, a panel is being mounted.

Finishing Touches, Handles & More

80/20 has a wide range of handles, locks and catches for your door or access point. Start off by deciding how frequently the door will be in use and whether you will want it to be locked.

Unlocked

Locked

If people will be using it often, consider ergonomic handles or offset handles that hinder finger-pinching injuries. There are also flush handles to prevent snags or heavy-duty latches for larger doors or magnetic catches to help ensure a connection.

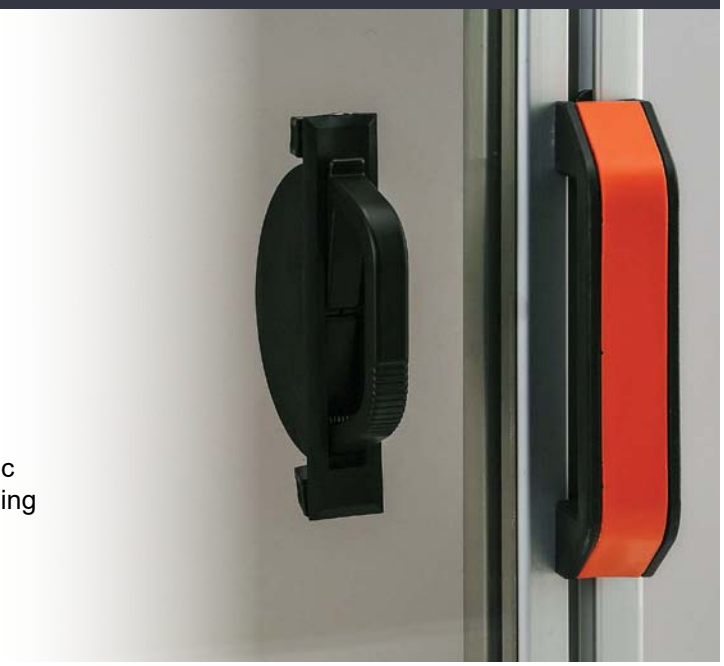

Bi-Fold Door Configure

Designing a bi-fold door using 80/20® products is a straight-forward process. Simply remember to include the hinge and opening gaps when sizing the inside dimension of your door, while taking into account the profile size. Follow the steps listed and reference the drawing for the standard method of designing a bi-fold door.

Step 1: Select the profile you will use for building your bi-fold door. Typically this is the same as the frame.

Step 2: Determine the opening width of your door.

Step 3: Choose your hinge type and find the standard gap between profiles when using that hinge.

Step 4: Choose the total width for each inside door, remembering to subtract the hinge and clearance gaps.

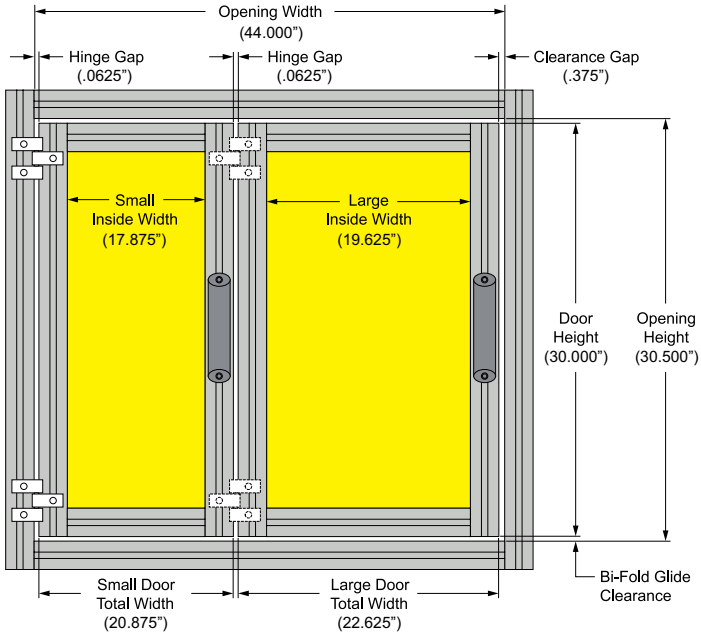

How to determine the width of the small door (15 series):

Add together all of the hinge gap, the clearance gap, and 1.75" (1.125" for 10 series) for the overlay:

(.0625" + .0625" + .375" + 1.750" = 2.250")

Subtract the above total from the total opening width and divide by 2.

(44.000" - 2.250" = 41.750" ÷ 2 = 20.875")

How to determine the width of the large door (15 series):

Take the width of the small door and add 1.75" (1.125" for 10 series) for the overlay:

(20.875" + 1.750" = 22.625")

Framed & Unframed Doors

- For both framed and unframed doors the hinge side gap depends on hinge.
- Framed Doors: There is a 1/4" (6.35mm) top, bottom and handle gap. When using door gasket subtract 1/8" (3.175mm).
- Unframed Doors: There is a 1/8" (3.175mm) top, bottom and handle gap.

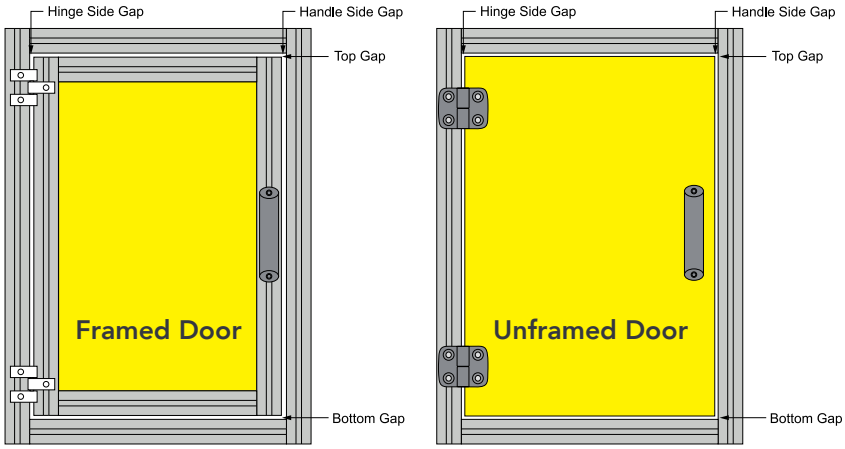

Panels & Doors

Acrylic Panels

- Stable up to 180°F / 82.2°C
- Indoor/outdoor
- Impact resistant, half the weight of glass
- High optical clarity

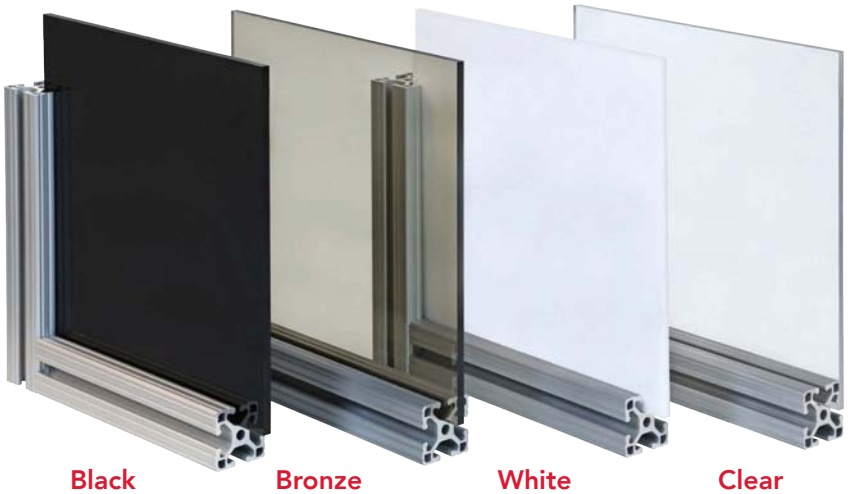

Black Bronze White Clear

Part No. (Metric)	Series	Color	Material	Thickness	Stock Sheet Size	Weight
2601 (65-2601)	F M	Clear	Acrylic	.220 - .236" (6mm)	48" x 96" + .250/-0 (1219.2mm x 2438.4mm + 6.35/-0)	1.450 lb / ft² (6.24 kg / m²)
2602 (65-2602)		Clear		.177" (4.5mm)		.840 lb / ft² (5.22 kg / m²)
2603 (65-2603)		White		.220 - .236" (6mm)		1.450 lb / ft² (6.53 kg / m²)
2604 (65-2604)		White		.177" (4.5mm)		.840 lb / ft² (4.87 kg / m²)
2605 (65-2605)		Black		.220 - .236" (6mm)		1.450 lb / ft² (6.44 kg / m²)
2606 (65-2606)		Black		.177" (4.5mm)		.840 lb / ft² (4.89 kg / m²)
2607 (65-2607)		Bronze		.220 - .236" (6mm)		1.450 lb / ft² (6.31 kg / m²)
2608 (65-2608)		Bronze		.177" (4.5mm)		.840 lb / ft² (4.86 kg / m²)

Standard Machining Services

Machining Type	Reference Page
Cut-to-Size	10-26
Drill Thru	10-44

80/20 BUILD YOUR IDEA
More on 80/20® products available at 8020.net

AR / ESD / Recycled Polycarbonate

- Stable up to 240°F / 115.5°C
- High optical clarity
- Impact resistant
- UV resistant

- Prohibits static electricity
- High optical clarity
- Chemical resistant
- Impact resistant

- Stable up to 240°F / 115.5°C
- Impact Resistant
- 200 times stronger than glass
- 30 times stronger than acrylic

AR Polycarbonate

ESD Polycarbonate

Recycled Polycarbonate

Part No. (Metric)	Series	Color	Material	Thickness	Stock Sheet Size	Weight
2641 (65-2641)	F M	Clear	AR Polycarbonate	.177" (4.5mm)	48" x 96" + .250/-0 (1219.2mm x 2438.4mm + 6.35/-0)	1.150 lb / ft² (5.293 kg / m²)
2642 (65-2642)		Clear		.220 - .236" (6mm)		1.500 lb / ft² (6.672 kg / m²)
2648 (65-2648)		Clear	ESD Polycarbonate	.250" (6.35mm)	48" x 96" + .250/-0 (1219.2mm x 2438.4mm + 6.35/-0)	1.531 lb / ft² (7.480 kg / m²)
2649 (65-2649)		Clear		.187" (4.750mm)		1.088 lb / ft² (5.310 kg / m²)
2646 (65-2646)		Clear	Recycled Polycarbonate	.220 - .236" (6mm)	48" x 96" + .250/-0 (1219.2mm x 2438.4mm + 6.35/-0)	1.500 lb / ft² (6.517 kg / m²)
2647 (65-2647)		Clear		.177" (4.5mm)		1.150 lb / ft² (5.155 kg / m²)

Standard Machining Services

Machining Type	Reference Page
Cut-to-Size	10-26
Drill Thru	10-44

Panels & Doors

Polycarbonate Panels

- Stable up to 240°F / 115.5°C
- Impact resistant
- 200 times stronger than glass
- 30 times stronger than acrylic

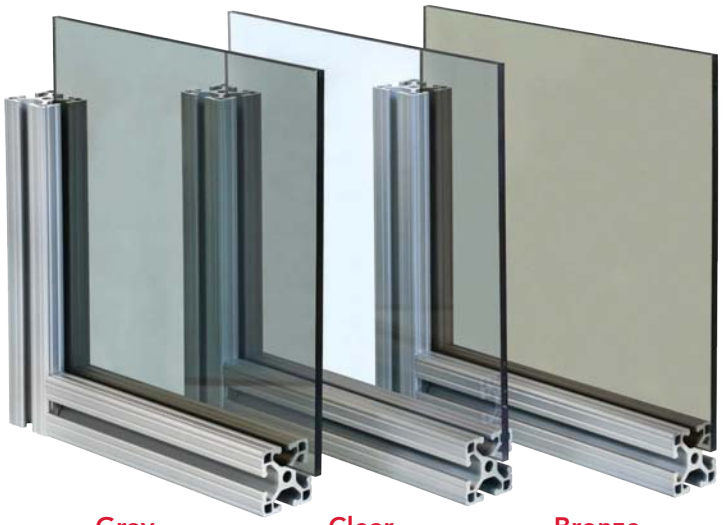

Gray Clear Bronze

Part No. (Metric)	Series	Color	Material	Thickness	Stock Sheet Size	Weight
2645 (65-2645)	F M	Clear	Polycarbonate	.500" (12.7mm)	48" x 96" + .250/-0 (1219.2mm x 2438.4mm + 6.35/-0)	3.120 lb / ft² (14.586 kg / m²)
2644 (65-2644)		Clear		.375" (9.5mm)		2.340 lb / ft² (11.017 kg / m²)
2609 (65-2609)		Clear		.220 - .236" (6mm)	48" x 96" + .250/-0 (1219.2mm x 2438.4mm + 6.35/-0) 60" x 96" + .250/-0 (1524.0mm x 2438.4mm + 6.35/-0)	1.500 lb / ft² (6.465 kg / m²)
2610 (65-2610)		Clear		.177" (4.5mm)	48" x 96" + .250/-0 (1219.2mm x 2438.4mm + 6.35/-0)	1.150 lb / ft² (5.362 kg / m²)
2643 (65-2643)		Clear		.118" (3mm)		.737 lb / ft² (3.517 kg / m²)
2611 (65-2611)		Bronze		.220 - .236" (6mm)		1.500 lb / ft² (6.965 kg / m²)
2612 (65-2612)		Bronze		.177" (4.5mm)		1.150 lb / ft² (5.310 kg / m²)
2629 (65-2629)		Gray		.220 - .236" (6mm)		1.500 lb / ft² (6.396 kg / m²)
2630 (65-2630)		Gray		.177" (4.5mm)		1.150 lb / ft² (5.362 kg / m²)

Standard Machining Services

Machining Type	Reference Page
Cut-to-Size	10-26
Drill Thru	10-44

80/20 BUILD YOUR IDEA
More on 80/20® products available at 8020.net

ABS Haircell Panels

- Stands for Acrylonitrile butadiene styrene (ABS)
- One smooth side, one textured side
- Stable up to 180°F / 82.2°C
- Impact resistant

Black

Part No. (Metric)	Series	Color	Material	Thickness	Stock Sheet Size	Weight
2613-S (65-2613-S)	F M	Black	ABS	.236" (6.mm)	48" + .250/-0 x 96" +.500/-0 (1219.2mm + 6.35/-0 x 2438.4mm + 12.7/-0)	1.700 lb / ft² (5.689 kg / m²)
2613-T (65-2613-T)		Black		.236" (6.mm)		1.700 lb / ft² (5.689 kg / m²)
2614-S (65-2614-S)		Black		.177" (4.5mm)		1.000 lb / ft² (4.965 kg / m²)
2614-T (65-2614-T)		Black		.177" (4.5mm)		1.000 lb / ft² (4.965 kg / m²)

See page 4-7 for important ordering information.

Standard Machining Services

Machining Type	Reference Page
Cut-to-Size	10-26
Drill Thru	10-44

Panels & Doors

PVC/Acrylic Panels

- Stands for Polyvinyl Chloride (PVC)
- Impact & chemical resistant
- Stable up to 160°F / 71.1°C
- One smooth side, one textured side

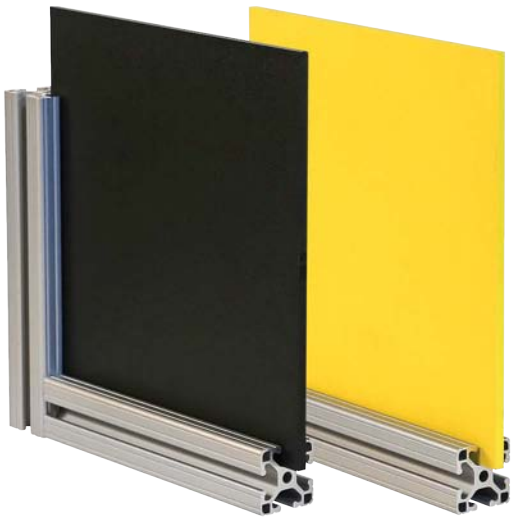

Black Yellow

Part No. (Metric)	Series	Color	Material	Thickness	Stock Sheet Size	Weight
2660-S (65-2660-S)	F M	Black	PVC Acrylic	.187" (4.70mm)	48" x 96" + .375/-0 (1219.2mm x 2438.4mm + 9.50/-0)	1.239 lb / ft² (6.189 kg / m²)
2660-T (65-2660-T)		Black		.187" (4.70mm)		1.239 lb / ft² (6.189 kg / m²)
2661-S (65-2661-S)		Black		.250" (6.30mm)		1.728 lb / ft² (8.436 kg / m²)
2661-T (65-2661-T)		Black		.250" (6.30mm)		1.728 lb / ft² (8.436 kg / m²)
2662-S (65-2662-S)		Yellow		.187" (4.70mm)		1.224 lb / ft² (6.103 kg / m²)
2662-T (65-2662-T)		Yellow		.187" (4.70mm)		1.224 lb / ft² (6.103 kg / m²)
2663-S (65-2663-S)		Yellow		.250" (6.30mm)		1.440 lb / ft² (7.030 kg / m²)
2663-T (65-2663-T)		Yellow		.250" (6.30mm)		1.440 lb / ft² (7.030 kg / m²)

See page 4-7 for important ordering information.

Standard Machining Services

Machining Type	Reference Page
Cut-to-Size	10-26
Drill Thru	10-44

80/20 BUILD YOUR IDEA
More on 80/20® products available at 8020.net

Expanded PVC Panels

- Stands for Polyvinyl Chloride (PVC)
- Weather & chemical resistant
- Stable up to 140°F / 60°C
- Smooth finish

Black Blue Gray Red White Yellow

Part No. (Metric)	Series	Color	Material	Thickness	Stock Sheet Size	Weight
2615 (65-2615)	F M	White	PVC	.236" (6mm)	48" + .197/-0 x 96" + .394/-0 (1219.2mm + 5.0/-0 x 2438.4mm + 10.0/-0)	.625 lb / ft² (3.051 kg / m²)
2616 (65-2616)		White		.118" (3mm)		.438 lb / ft² (2.136 kg / m²)
2617 (65-2617)		Black		.236" (6mm)		.625 lb / ft² (3.051 kg / m²)
2618 (65-2618)		Black		.118" (3mm)		.438 lb / ft² (2.136 kg / m²)
2619 (65-2619)		Red		.236" (6mm)		.625 lb / ft² (3.051 kg / m²)
2620 (65-2620)		Red		.118" (3mm)		.438 lb / ft² (2.136 kg / m²)
2621 (65-2621)		Blue		.236" (6mm)		.625 lb / ft² (3.051 kg / m²)
2622 (65-2622)		Blue		.118" (3mm)		.438 lb / ft² (2.136 kg / m²)
2623 (65-2623)		Gray		.236" (6mm)		.625 lb / ft² (3.051 kg / m²)
2624 (65-2624)		Gray		.118" (3mm)		.438 lb / ft² (2.136 kg / m²)
2631 (65-2631)		Yellow		.236" (6mm)		.625 lb / ft² (3.051 kg / m²)
2632 (65-2632)		Yellow		.118" (3mm)		.438 lb / ft² (2.136 kg / m²)

Standard Machining Services

Machining Type	Reference Page
Cut-to-Size	10-26
Drill Thru	10-44

Panels & Doors

Aluminum Composite Panels

- Stable up to 180°F / 82.2°C
- Half the weight of aluminum
- Made of polyethelene core, aluminum skin

Platinum

Part No.	Series	Color	Material	Thickness	Stock Sheet Size	Weight
2650	F	Platinum	Aluminum Composite	.236"	50" x 122" +/- .079	1.490 lb / ft²
65-2650	M			6mm	1270mm x 3098.8mm + 2.0/-0	7.068 kg / m²

Standard Machining Services

Machining Type	Reference Page
Cut-to-Size	10-26
Drill Thru	10-44

80/20 BUILD YOUR IDEA
More on 80/20® products available at 8020.net

Lite Aluminum Composite Panels

- Stable up to 125°F / 51.6°C
- Made of corrugated polyallomer core, aluminum skin
- Weather resistant

Black Blue Red Silver Yellow

Part No. (Metric)	Series	Color	Material	Thickness	Stock Sheet Size	Weight
2633 (65-2633)	F M	Blue	Lite Aluminum Composite	.236" (6mm)	48" x 96" + .250/-0 (1219.2mm x 2438.4mm + 6.3/-0)	.625 lb / ft² (1.83 to 3.15kg / m²)
2634 (65-2634)		Red				
2635 (65-2635)		Silver				
2636 (65-2636)		Yellow				
2637 (65-2637)		Black				

Standard Machining Services

Machining Type	Reference Page
Cut-to-Size	10-26
Drill Thru	10-44

Panels & Doors

Twin Wall Polycarbonate Panels

- Provides 90 percent light transmission
- Weather resistant

Part No.	Series	Color	Material	Thickness	Stock Sheet Size	Weight
2640	F	Clear	Polycarbonate	.236"	48" + .157/-0 x 96" + .197/-0	.266 lb / ft²
65-2640	M			6mm	1219.2mm + 4.0/-0 x 2438.4mm + 5.0/-0	1.293 kg / m²

See page 4-7 for important ordering information.

Standard Machining Services

Machining Type	Reference Page
Cut-to-Size	10-26
Drill Thru	10-44

80/20® BUILD YOUR IDEA
More on 80/20® products available at 8020.net

HDPE Panels

- Stands for High Density Polyethylene (HDPE)
- Textured on both sides (excludes natural HDPE)
- Chemical resistant
- Impact resistant

Black Blue Gray White Red Natural Yellow

Part No. (Metric)	Series	Color	Material	Thickness	Stock Sheet Size	Weight
2651 (65-2651)	F M	Black	HDPE	.220 - .236" (6mm)	48" + .250/-0 x 96" + .500/-0 (1219.2mm + 6.3/-0 x 2438.4mm + 12.7/-0)	1.200 lb / ft² (5.86 kg / m²)
2652 (65-2652)		Black		.177" (4.5mm)		.900 lb / ft² (4.46 kg / m²)
2653 (65-2653)		White		.220 - .236" (6mm)		1.200 lb / ft² (5.12 kg / m²)
2654 (65-2654)		White		.177" (4.5mm)		.900 lb / ft² (4.50 kg / m²)
2655 (65-2655)		Gray		.220 - .236" (6mm)		1.200 lb / ft² (5.12 kg / m²)
2656 (65-2656)		Gray		.177" (4.5mm)		.900 lb / ft² (4.31 kg / m²)
2657 (65-2657)		Yellow		.220 - .236" (6mm)		1.200 lb / ft² (5.24 kg / m²)
2658 (65-2658)		Yellow		.177" (4.5mm)		.900 lb / ft² (4.50 kg / m²)
2666 (65-2666)		Blue		.220 - .236" (6mm)		1.200 lb / ft² (5.20 kg / m²)
2667 (65-2667)		Blue		.177" (4.5mm)		.900 lb / ft² (4.27 kg / m²)
2668 (65-2668)		Red		.220 - .236" (6mm)		1.200 lb / ft² (5.17 kg / m²)
2669 (65-2669)		Red		.177" (4.5mm)		.900 lb / ft² (4.36 kg / m²)
2812 (65-2812)		Natural		.375" (9.5mm)		1.824 lb / ft² (9.17 kg / m²)
2813 (65-2813)		Natural		.500" (12mm)		2.416 lb / ft² (11.96 kg / m²)

Standard Machining Services

Machining Type	Reference Page
Cut-to-Size	10-26
Drill Thru	10-44

Panels & Doors

HDPE Pegboard

- Stands for High Density Polyethylene (HDPE)
- Textured on both sides
- Chemical resistant
- Impact resistant

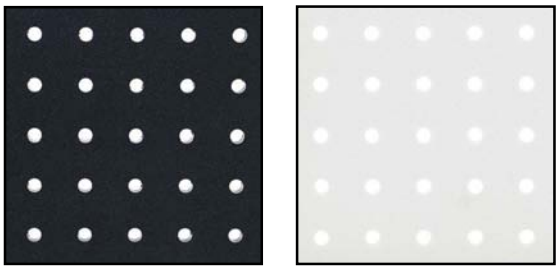

Hole Spacing
1.00" on center

Part No. (Metric)	Series	Color	Material	Thickness	Hole Spacing	Hole Diameter	Stock Sheet Size	Weight
2659 (65-2659)	F M	Black	HDPE	.25" (6mm)	1.00" on center	9/32	48" + .197/-0 x 96" + .394/-0 (1219.2mm + 5.0/-0 x 2438.4mm + 10.0/-0)	1.450 lb / ft² (7.080 kg / m²)
2664 (65-2664)		White						

Standard Machining Services

Machining Type	Reference Page
Cut-to-Size	10-26
Drill Thru	10-44

80/20 BUILD YOUR IDEA
More on 80/20® products available at 8020.net

Phenolic Resin Panel

- Typically used for work surfaces / tabletops
- Use tabletop mounting tape (pg. 8-42)
- Chemical resistant
- Moisture resistant

2808 / 65-2808

2814 / 65-2814

2815 / 65-2815

Part No. (Metric)	Series	Color	Material	Finish	Thickness	Stock Sheet Size	Weight
2808 (65-2808)	F M	Black	Phenolic Resin	Black Matte Marble	.750" (19mm)	48" +/- .125" x 96" +/- .156" (1219.2mm +/- 3.175mm x 2438.4 +/- 3.962)	5.600 lb / ft² (27.340 kg / m²)
2814 (65-2814)*				Light Matte Woodgrain	.500" (12.70mm)	49" +/- 1.000" x 97" +/- 1.000" (1244.6mm +/- 25.40mm x 2463.8 +/- 25.40)	3.620 lb / ft² (17.674 kg / m²)
2815 (65-2815)*				Dark Matte Woodgrain	.500" (12.70mm)		3.620 lb / ft² (17.674 kg / m²)

*See page 4-7 for important ordering information.

Standard Machining Services

Machining Type	Reference Page
Cut-to-Size	10-26
Drill Thru	10-44

Panels & Doors

Solid Aluminum Plate

- Mill finished 6061-T6 aluminum
- Six thicknesses available

Part No. (Metric)	Series	Material	Alloy	Thickness	Stock Sheet Size	Weight
2452 (65-2452)	F M	Aluminum	6061-T6	.060" (1.524mm)	48" +/- .125 x 144" +/- .156 (1219.2mm + 3.2/-0 x 3657.6mm + 4.0/-0)	.889 lb / ft² (4.336 kg / m²)
2453 (65-2453)				.125" (3.175mm)		1.764 lb / ft² (8.672 kg / m²)
2454 (65-2454)				.187" (4.750mm)		2.680 lb / ft² (13.008 kg / m²)
2455 (65-2455)				.250" (6.350mm)		3.700 lb / ft² (17.344 kg / m²)
2456 (65-2456)				.375" (9.525mm)		5.550 lb / ft² (27.100 kg / m²)
2457 (65-2457)				.500" (12.700mm)	48.5" +/- .375 x 96.5" +/- .500 (1231.9mm + 9.5/-0 x 2451.1mm + 12.7/-0)	7.400 lb / ft² (36.134 kg / m²)

Standard Machining Services

Machining Type	Reference Page
Cut-to-Size	10-26

80/20 BUILD YOUR IDEA
More on 80/20® products available at 8020.net

Diamond Tread Plate

- 3003-H22 aluminum
- Raised pattern for improved traction
- Shiny/reflective surface
- Three thicknesses available

Part No. (Metric)	Series	Color	Material	Finish	Thickness	Stock Sheet Size	Weight
2483 (65-2483)	F M	Bright Aluminum	Aluminum (3003-H22)	Polished	.125" (3.175mm)	48" x 96" + .250/-0 (1219.2mm x 2438.4mm + 6.35/-0)	1.88 lb / ft² (9.179 kg / m²)
2484 (65-2484)					.187" (4.750mm)		2.78 lb / ft² (13.573 kg / m²)
2485 (65-2485)					.250" (6.350mm)		3.66 lb / ft² (17.869 kg / m²)

Standard Machining Services

Machining Type	Reference Page
Cut-to-Size	10-26

Panels & Doors

Laminated Tabletops

- Particle board core
- Use tabletop mounting tape (pg. 8-42) or tabletop mounting kit (pg. 4-58)

Part No. (Metric)	Series	Color	Surface Material	Thickness	Stock Sheet Size	Weight
2800 (65-2800)	F M	Gray	Wilsonart® laminate D92-60	1.25" (31.75mm)	30" x 48" (762.00mm x 1219.20mm)	50.00 lb (22.680 kg) / Stock Sheet
2802 (65-2802)					30" x 60" (762.00mm x 1524.00mm)	63.00 lb (28.577 kg) / Stock Sheet
2804 (65-2804)					30" x 72" (762.00mm x 1828.80mm)	75.00 lb (34.020 kg) / Stock Sheet
2806 (65-2806)					36" x 72" (914.40mm x 1828.80mm)	90.00 lb (40.824 kg) / Stock Sheet

Standard Machining Services

Machining Type	Reference Page
Cut-to-Size	10-26

80/20® BUILD YOUR IDEA
More on 80/20® products available at 8020.net

Expanded Metal Panels

- Impact resistant
- Diamond-shaped openings provide ventilation

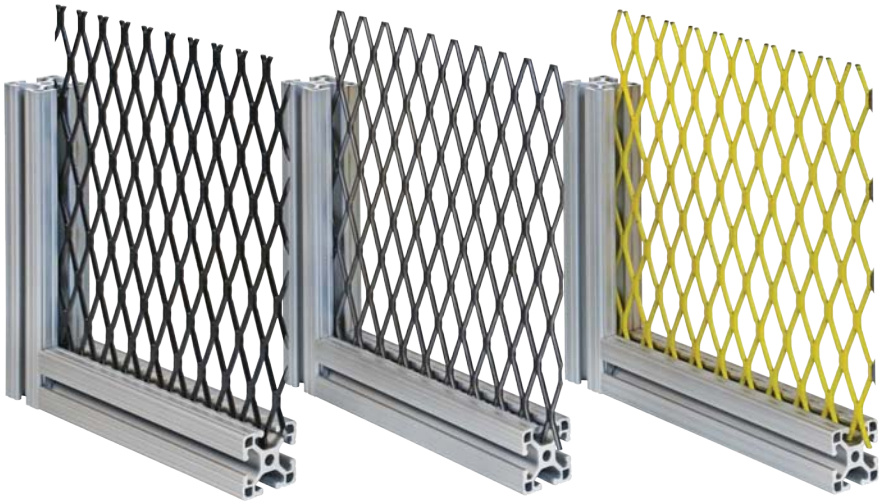

Powder Coated Black | Carbon Steel | Powder Coated Yellow

Part No. (Metric)	Series	Material	Type	Thickness	Diamond Dimensions	Stock Sheet Size	Weight
2480 (65-2480)	F M	Carbon Steel	Flattened	.135" (3.43mm)	2" x .9" (50.4mm x 22.8mm)	48" x 96" + .250/-0 (1219.2mm x 2438.4mm + 6.35/-0)	1.422 lb / ft² (6.940 kg / m²)
2481 (65-2481)		Powder Coated Black		.140" (3.43mm)			1.408 lb / ft² (6.870 kg / m²)
2482 (65-2482)		Powder Coated Yellow		.140" (3.43mm)			1.376 lb / ft² (6.720 kg / m²)

See page 4-7 for important ordering information.

Standard Machining Services

Machining Type	Reference Page
Shear-to-Size	10-26

Panels & Doors

Wire Mesh Panels

- Impact resistant
- Square-shaped openings provide visibility and ventilation

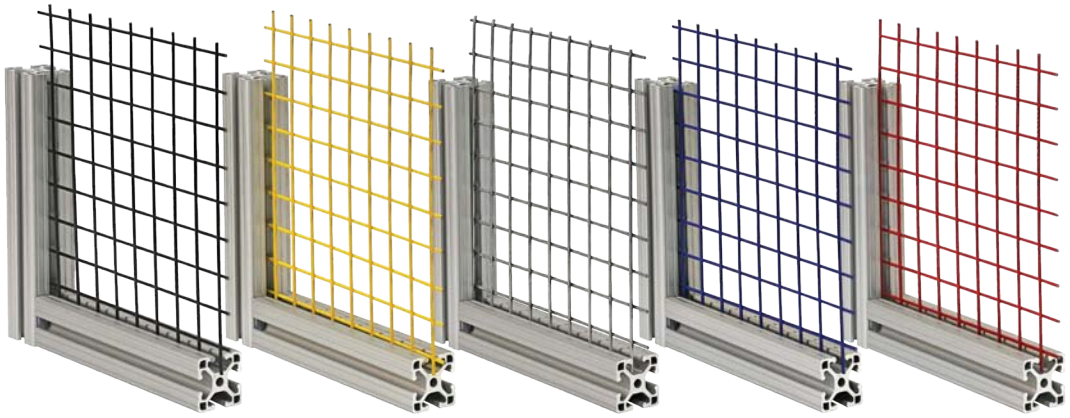

Black Yellow Galvanized Blue Red

Part No. (Metric)	Series	Material	Gauge	Thickness	Square Dimensions	Stock Sheet Size	Weight
2470 (65-2470)	F M	Galvanized Steel	12	.200" (5.10mm)	1" x 1" (25.40mm x 25.40mm)	48" x 96" +/- .50" (1219.2mm x 2438.4mm)	.618 lb / ft² (3.017 kg / m²)
2460 (65-2460)		Galvanized Steel	16	.137" (3.50mm)	.50" x .50" (12.70mm x 12.70mm)		.510 lb / ft² (2.490 kg / m²)
2468 (65-2468)		Powder Coated Blue	12	.200" (5.10mm)	1" x 1" (25.40mm x 25.40mm)		1.010 lb / ft² (4.931 kg / m²)
2463 (65-2463)		Powder Coated Blue	16	.137" (3.50mm)	.50" x .50" (12.70mm x 12.70mm)		.580 lb / ft² (2.832 kg / m²)
2467 (65-2467)		Powder Coated Red	12	.200" (5.10mm)	1" x 1" (25.40mm x 25.40mm)		1.010 lb / ft² (4.931 kg / m²)
2462 (65-2462)		Powder Coated Red	16	.137" (3.50mm)	.50" x .50" (12.70mm x 12.70mm)		.580 lb / ft² (2.832 kg / m²)
2471 (65-2471)		Powder Coated Yellow	12	.200" (5.10mm)	1" x 1" (25.40mm x 25.40mm)		1.010 lb / ft² (4.931 kg / m²)
2461 (65-2461)		Powder Coated Yellow	16	.137" (3.50mm)	.50" x .50" (12.70mm x 12.70mm)		.580 lb / ft² (2.832 kg / m²)
2479 (65-2479)		Powder Coated Black	12	.200" (5.10mm)	1" x 1" (25.40mm x 25.40mm)		1.010 lb / ft² (4.931 kg / m²)
2464 (65-2464)		Powder Coated Black	16	.137" (3.50mm)	.50" x .50" (12.70mm x 12.70mm)		.580 lb / ft² (2.832 kg / m²)

Standard Machining Services

Machining Type	Reference Page
Shear-to-Size	10-26

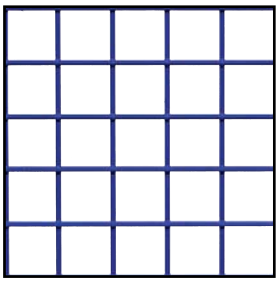

12 Gauge
1" x 1" (25.40mm x 25.40mm)

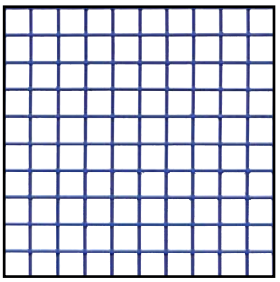

16 Gauge
.50" x .50" (12.70mm x 12.70mm)

80/20 BUILD YOUR IDEA
More on 80/20® products available at 8020.net

Thermoplastic Coated Wire Mesh Panels

- Impact resistant
- Square-shaped openings provide visibility and ventilation

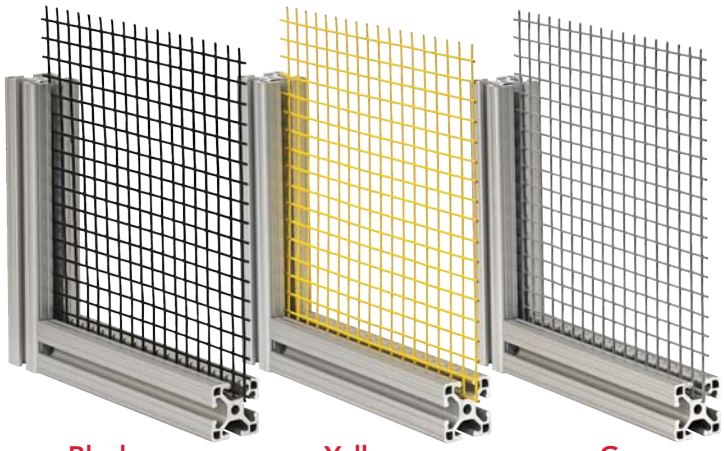

Part No. (Metric)	Series	Material	Gauge	Thickness	Square Dimensions	Stock Sheet Size	Weight
2472 (65-2472)		Thermoplastic Black	12	.210" (5.30mm)	1" x 1" (25.40mm x 25.40mm)		.663 lb / ft² (3.237 kg / m²)
2474 (65-2474)		Thermoplastic Black	16	.140" (3.55mm)	.50" x .50" (12.70mm x 12.70mm)		.650 lb / ft² (3.173 kg / m²)
2478 (65-2478)		Thermoplastic Black	12	.210" (5.30mm)	2" x 2" (50.80mm x 50.80mm)		.663 lb / ft² (3.237 kg / m²)
2473 (65-2473)	F M	Thermoplastic Yellow	12	.210" (5.30mm)	1" x 1" (25.40mm x 25.40mm)	48" x 96" +/- .50" (1219.2mm x 2438.4mm)	.663 lb / ft² (3.237 kg / m²)
2475 (65-2475)		Thermoplastic Yellow	16	.140" (3.55mm)	.50" x .50" (12.70mm x 12.70mm)		.650 lb / ft² (3.173 kg / m²)
2477 (65-2477)		Thermoplastic Gray	12	.210" (5.30mm)	1" x 1" (25.40mm x 25.40mm)		.663 lb / ft² (3.237 kg / m²)
2476 (65-2476)		Thermoplastic Gray	16	.140" (3.55mm)	.50" x .50" (12.70mm x 12.70mm)		.650 lb / ft² (3.173 kg / m²)

Standard Machining Services

Machining Type	Reference Page
Shear-to-Size	10-26

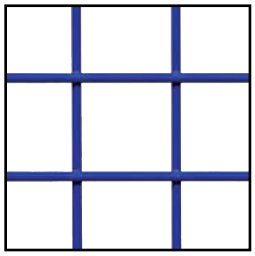

12 Gauge
2" x 2" (50.80mm x 50.80mm)

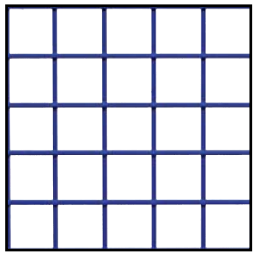

12 Gauge
1" x 1" (25.40mm x 25.40mm)

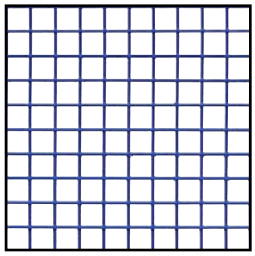

16 Gauge
.50" x .50" (12.70mm x 12.70mm)

Panels & Doors

Aluminum Panel Mount Block

- Mounts panel flush with profile edge or on profile surface
- Panel type/thickness determines hardware to mount panel
- Slot tab acts to align mount in T-slot
- Includes hardware to mount block to T-slot

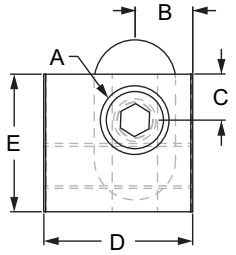

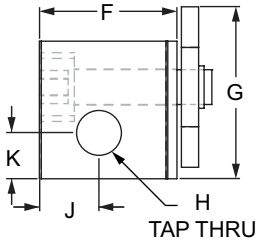

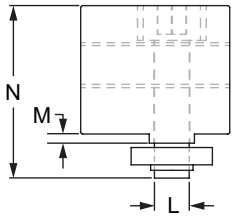

Part No.	Series	A	B	C	D	E	F	G	H	J	K	L	M	N	Weight
2427	10	.345" c-bore .210" deep with .201" thru hole	.312"	.225"	.812"	.750"	.750"	.963"	1/4-20	.375"	.250"	.240"	.050"	.960"	.051 lb
2427-Black	10	.345" c-bore .210" deep with .201" thru hole	.312"	.225"	.812"	.750"	.750"	.963"	1/4-20	.375"	.250"	.240"	.050"	.960"	.051 lb
2910	10	.345" c-bore, .210" deep with .201" thru hole	.312"	.225"	.812"	.750"	.750"	.713"	1/4-20	.375"	.250"	.190"	.050"	.960"	.048 lb
2910-Black	10	.345" c-bore, .210" deep with .201" thru hole	.312"	.225"	.812"	.750"	.750"	.713"	1/4-20	.375"	.250"	.190"	.050"	.960"	.048 lb
2425	15	.406" c-bore .310" deep with .257" thru hole	.263"	.495"	1.250"	1.000"	1.000"	1.143"	5/16-18	.437"	.392"	.309"	.125"	1.310"	.121 lb
2425-Black	15	.406" c-bore .310" deep with .257" thru hole	.263"	.495"	1.250"	1.000"	1.000"	1.143"	5/16-18	.437"	.392"	.309"	.125"	1.310"	.121 lb
2900	15	.406" c-bore, .310" deep with .257" thru hole	.495"	.263"	1.250"	1.000"	1.000"	1.143"	5/16-18	.437"	.392"	.250"	.125"	1.310"	.121 lb
2900-Black	15	.406" c-bore, .310" deep with .257" thru hole	.495"	.263"	1.250"	1.000"	1.000"	1.143"	5/16-18	.437"	.392"	.250"	.125"	1.310"	.121 lb
25-2427	25	9.80mm c-bore 5.59mm deep with 5.59mm thru hole	7.85mm	6.30mm	20.32mm	19.00mm	20.32mm	19.00mm	M6 x 1.0	9.47mm	6.35mm	5.00mm	1.32mm	25.60mm	.0231 kg
25-2427-Black	25	9.80mm c-bore 5.59mm deep with 5.59mm thru hole	7.85mm	6.30mm	20.32mm	19.00mm	20.32mm	19.00mm	M6 x 1.0	9.47mm	6.35mm	5.00mm	1.32mm	25.60mm	.0231 kg
40-2425	40	10.49mm c-bore 8.64mm deep with 6.30mm thru hole	14.14mm	7.24mm	34.29mm	26.01mm	26.49mm	29.08mm	M8 x 1.25	11.61mm	10.01mm	6.00mm	3.30mm	33.64mm	.0644 kg
40-2425-Black	40	10.49mm c-bore 8.64mm deep with 6.30mm thru hole	14.14mm	7.24mm	34.29mm	26.01mm	26.49mm	29.08mm	M8 x 1.25	11.61mm	10.01mm	6.00mm	3.30mm	33.64mm	.0644 kg

80/20 BUILD YOUR IDEA
More on 80/20® products available at 8020.net

Aluminum Panel Mount Block (Continued)

Material Specifications

Part No.	Material	Alloy	Finish
2427	Aluminum	6005A – T61	Clear Anodize
2427-Black			Black Anodize
2910			Clear Anodize
2910-Black			Black Anodize
2425			Clear Anodize
2425-Black			Black Anodize
2900			Clear Anodize
2900-Black			Black Anodize
25-2427			Clear Anodize
25-2427-Black			Black Anodize
40-2425			Clear Anodize
40-2425-Black			Black Anodize

Required Machining Services

Machining Type	Machined	Reference Page
Panel Mount Block Milling	Mounting Panel	10-41

Included Hardware (Mount to T-Slot)

Block	Series	Part No.	Qty.	Bolt	Part No.	Qty.	T-Nut
2427	10	3056	1	10-32 x 3/4 SHCS	3276	1	Economy
2910	10	3685*	1	10-32 x 3/4 SHCS	3676*	1	Economy
2425	15	3071	1	1/4-20 x 1.0 SHCS	3286	1	Economy
2900	15	3671*	1	1/4-20 x 1.0 SHCS	3686*	1	Economy
25-2427	25	13-5520	1	M5 x 20mm SHCS	25-1951	1	Economy
40-2425	40	13-6525	1	M6 x 25mm SHCS	3836	1	Economy

*Stainless steel (SS) hardware

Suggested Hardware (Mount to Panel)

Part No.	Series	Qty.	Bolt
3063	10	1	1/4-20 x 5/8 BHSCS
3065	10	1	1/4-20 x 3/4" BHSCS
3114	15	1	5/16-18 x 3/4 BHSCS
3117	15	1	5/16-18 x 7/8" BHSCS
13-6316	25	1	M6 x 16mm BHSCS
13-8316	40	1	M8 x 16mm BHSCS

- 3063 - mounts 1/4" panels to the surface of 10 Series profiles and mounts 3/16" panels flush.
- 3065 - mounts 1/2" panels to the surface of 10 Series profiles.
- 3114 - mounts 1/4" panels to the surface of, or flush with, 15 series profiles.
- 3117 - mounts 1/2" panels to the surface of 15 Series profiles.
- 25-2427 - mounts 4.5mm panels flush with 25 Series profiles.
- 40-2425 - mounts 6mm panels flush with 40 Series profiles.

Panel Covers Profile Surface | **Panel Flush with Profile Edge**

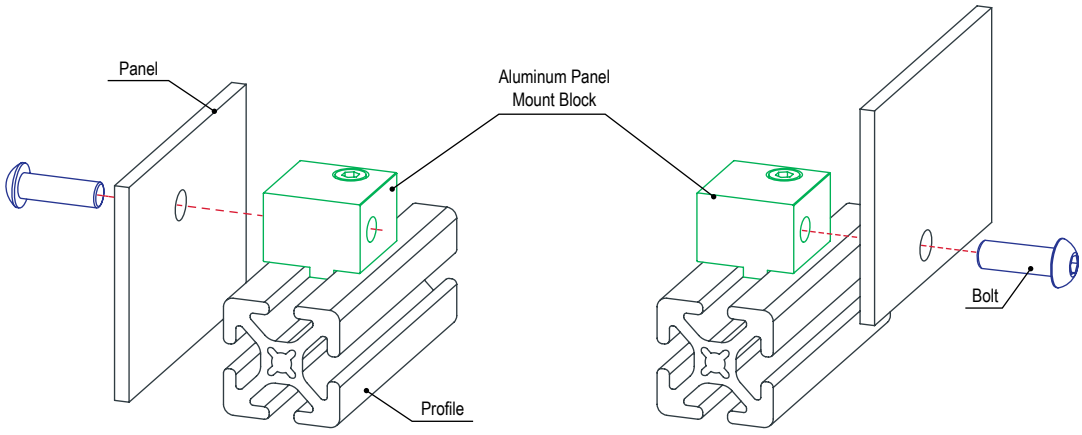

Panels & Doors

Detent Hinge Stopper

- Typically used with detent hinge (pg. 4-92) to prevent over-rotation

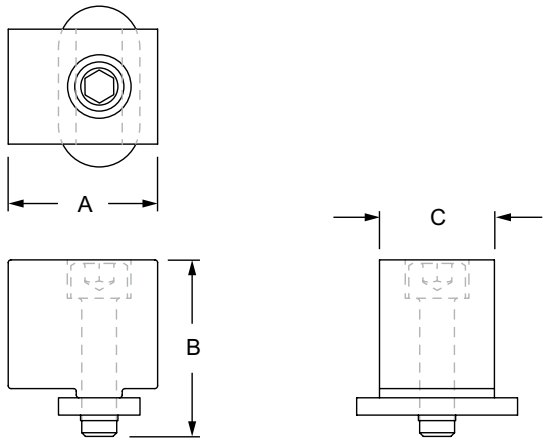

Part No.	Series	Material	Alloy	Finish	A	B	C	Weight
2054	10 15	Aluminum	6005A – T61	Clear Anodize	.812"	.960"	.625"	.047 lb
2054-Black				Black Anodize	.812"	.960"	.625"	.047 lb
65-2054	25 40			Clear Anodize	20.32mm	25.59mm	15.88mm	.0213 kg
65-2054-Black				Black Anodize	20.32mm	25.59mm	15.88mm	.0213 kg

Included Hardware (Mount to T-slot)

Part No.	Series	Qty.	Bolt
3056	10 15	1	10-32 x 3/4" SHCS
3276		1	Slide-in Economy T-Nut
13-5520	25 40	1	M5 x 4/5" SHCS
25-1951		1	Slide-in Economy T-Nut

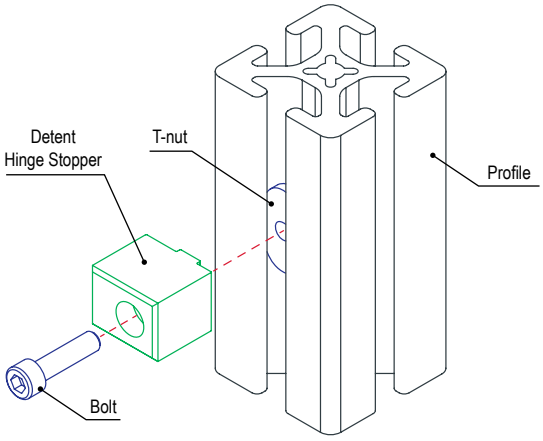

80/20 BUILD YOUR IDEA
More on 80/20® products available at 8020.net

Drop-In Lite Panel Mount Block

- Mounts panel flush with profile edge or on profile surface
- Spacer block can be used (pg. 4-33)
- Molded extension serves as T-slot stud

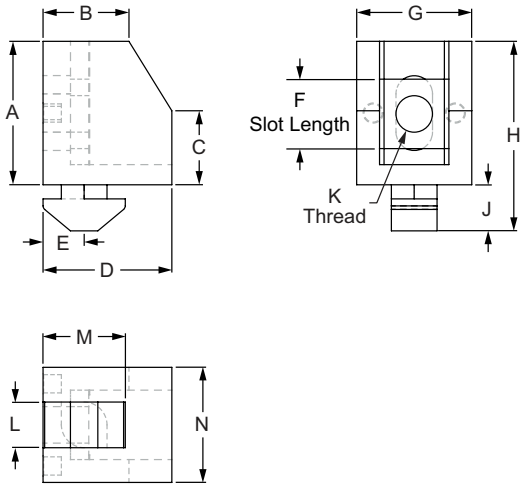

Part No.	Series	A	B	C	D	E	F	G	H	J	K	L	M	N	Weight
14139	15 40	25.00mm	13.00mm	9.00mm	25.00mm	8.50mm	12.50mm	18.50mm	34.00mm	9.00mm	M6 x 1.0	6.00mm	17.00mm	18.50mm	.0100 kg
14186	15 40	25.00mm	13.00mm	9.00mm	25.00mm	8.50mm	12.50mm	18.50mm	34.00mm	9.00mm	1/4-20	6.00mm	17.00mm	18.50mm	.0998 kg
14142	15 40	25.00mm	13.00mm	9.00mm	25.00mm	12.50mm	12.50mm	18.50mm	34.00mm	9.00mm	M6 x 1.0	6.00mm	17.00mm	18.50mm	.0181 kg
14143	15 40	25.00mm	13.00mm	9.00mm	25.00mm	14.50mm	12.50mm	18.50mm	34.00mm	9.00mm	M6 x 1.0	6.00mm	17.00mm	18.50mm	.0100 kg
14167	15 40	25.00mm	13.00mm	9.00mm	25.00mm	12.50mm	12.50mm	18.50mm	34.00mm	9.00mm	1/4-20	6.00mm	17.00mm	18.50mm	.0100 kg
14191	15 40	25.00mm	13.00mm	9.00mm	25.00mm	14.50mm	15.60mm	18.50mm	34.00mm	9.00mm	1/4-20	6.00mm	17.00mm	18.50mm	.0100 kg
14148	20	15.70mm	9.40mm	8.10mm	14.10mm	4.50mm	7.60mm	12.60mm	20.75mm	5.05mm	M4 x 0.7	5.00mm	9.00mm	12.60mm	.0027 kg
14138	30	25.00mm	16.00mm	—	18.50mm	7.00mm	10.50mm	18.50mm	31.20mm	6.20mm	M6 x 1.0	8.00mm	14.00mm	18.50mm	.0086 kg
14185	30	25.00mm	16.00mm	—	18.50mm	7.00mm	10.50mm	18.50mm	31.20mm	6.20mm	1/4-20	8.00mm	14.00mm	18.50mm	.0039 kg
14140	45	25.00mm	13.00mm	9.00mm	25.00mm	9.50mm	12.50mm	18.50mm	35.30mm	10.30mm	M6 x 1.0	9.00mm	15.50mm	18.50mm	.0106 kg
14188	45	25.00mm	13.00mm	9.00mm	25.00mm	9.50mm	12.50mm	18.50mm	35.30mm	10.30mm	1/4-20	9.00mm	15.50mm	18.50mm	.0104 kg
14189	45	25.00mm	13.00mm	9.00mm	25.00mm	14.00mm	12.50mm	18.50mm	35.30mm	10.30mm	M6 x 1.0	9.00mm	15.50mm	18.50mm	.0109 kg
14190	45	25.00mm	13.00mm	9.00mm	25.00mm	14.00mm	12.50mm	18.50mm	35.30mm	10.30mm	1/4-20	9.00mm	15.50mm	18.50mm	.0104 kg

Material Specifications

Material	Color	Process
Nylon	Black	Injection Molding

Required Machining Services

Machining Type	Machined	Reference Page
Panel Mount Block Milling	Mounting Panel	10-41

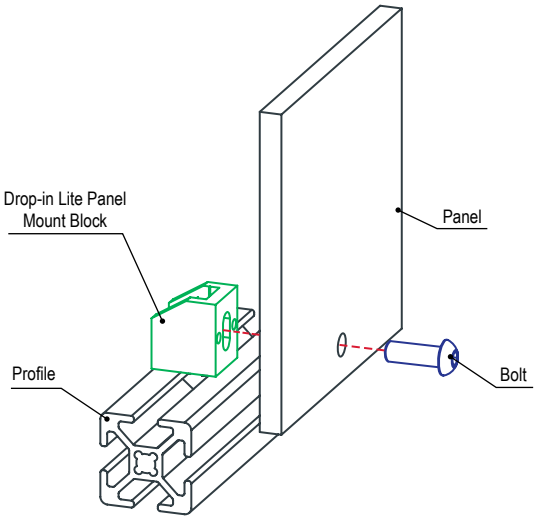

Panels & Doors

Lite Panel Mount Block

- Mounts panel flush with profile edge or on profile surface
- Panel type/thickness determines hardware to mount panel
- Spacer block can be used (pg. 4-33)
- Hardware not included

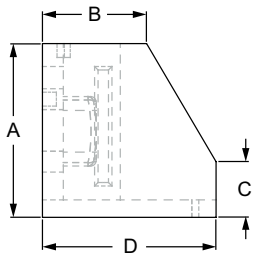

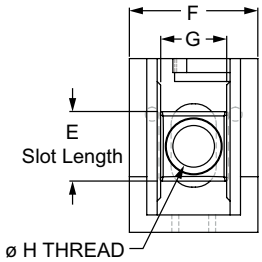

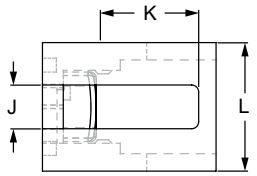

Part No.	Series	A	B	C	D	E	F	G	H	J	K	L	Weight
12050	15 30 40 45	25.00mm	15.00mm	8.00mm	25.00mm	10.00mm	18.50mm	9.50mm	M6 x 1.0	6.30mm	11.65mm	18.50mm	.0037 kg
14192		25.00mm	15.00mm	8.00mm	25.00mm	10.00mm	18.50mm	9.50mm	1/4-20	6.30mm	11.65mm	18.50mm	.0086 kg

* This block mounted to a 30 series bar will NOT flush mount to the edge of the profile.

Material Specifications

Material	Color	Process
Nylon	Black	Injection Molding

Required Machining Services

Machining Type	Machined	Reference Page
Panel Mount Block Milling	Mounting Panel	10-41

Suggested Hardware (Mount to T-Slot)

Part No.	Series	Qty.	Bolt	T-Nut
3408	15	1	1/4-20 x 1/2 BHSCS	Drop-in
75-3599	30	1	M6 x 10mm BHSCS	Drop-in
75-3600	40	1	M6 x 12mm BHSCS	Drop-in
75-3602	45	1	M6 x 14mm BHSCS	Drop-in

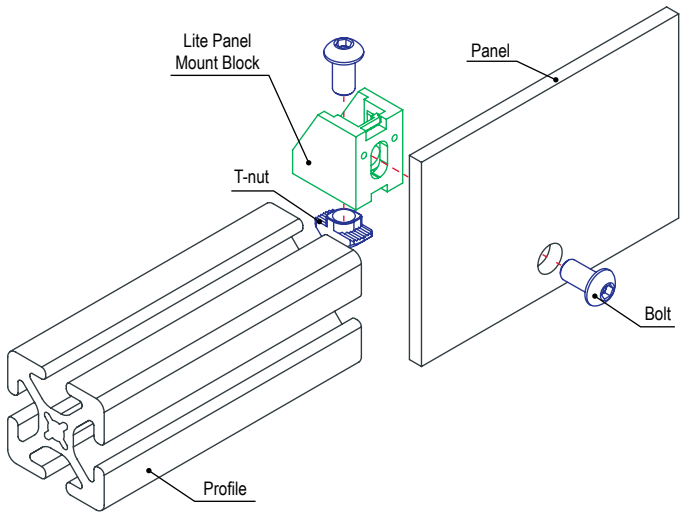

80/20 BUILD YOUR IDEA
More on 80/20® products available at 8020.net

Lite Panel Mount Block Spacer

- Increases thickness, allows offset panel mounting
- Works with lite or drop-in lite panel mount block

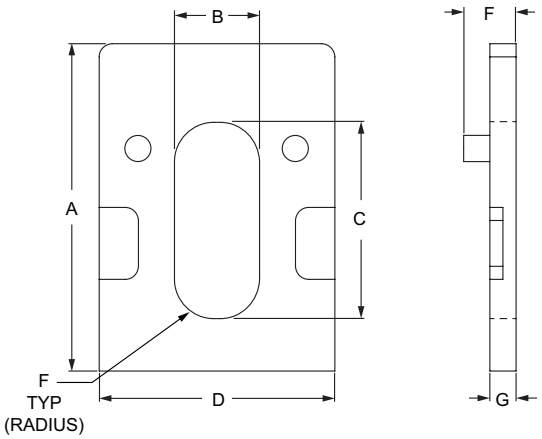

Part No.	Series	Material	Color	Process	A	B	C	D	E	F	G	Weight
12051	15 30 40 45	Nylon	Black	Injection Molding	25.00mm	6.50mm	15.00mm	18.00mm	3.00mm	4.00mm	2.00mm	.0009 kg
12053					25.00mm	6.50mm	15.00mm	18.00mm	3.00mm	5.00mm	3.00mm	.0012 kg
12055					25.00mm	6.50mm	15.00mm	18.00mm	3.00mm	7.00mm	5.00mm	.0023 kg

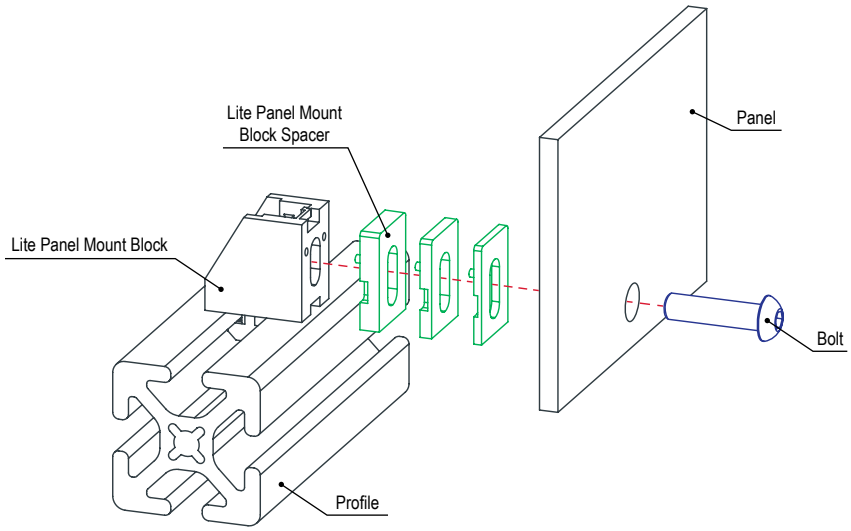

Panels & Doors

Adjustable Panel Mount Block

- Mounts panel flush with profile edge or on profile surface
- Option available with adjustable anti-rotation clip
- Slotted for variety of panel thicknesses
- Provides three options to mount the panel

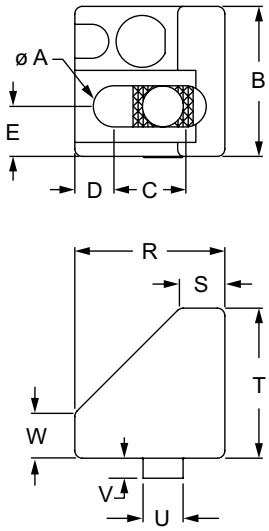

Part No.	Series	A	B	C	D	E	F	G	H	J	K	L
12057	15 40	8.20mm	30.00mm	14.40mm	7.80mm	10.00mm	10.00mm	7.00mm	M8 x 1.25	4.20mm	8.00mm	M6 x 1.0
12058*	15 40	8.20mm	30.00mm	14.40mm	7.80mm	10.00mm	10.00mm	7.00mm	M8 x 1.25	4.20mm	8.00mm	M6 x 1.0

Part No.	Series	M	N	P	Q	R	S	T	U	V	W	Weight
12057	15 40	—	8.20mm	5.20mm	7.70mm	30.00mm	9.00mm	30.00mm	—	—	9.00mm	.0653 kg
12058*	15 40	20.50mm	8.20mm	5.20mm	7.70mm	30.00mm	9.00mm	30.00mm	8.00mm	4.00mm	9.00mm	.0694 kg

* This block comes with an adjustable anti-rotation clip.

Material Specifications

Material	Finish	Process
Zinc	Smooth Black	Die Cast

Required Machining Services

Machining Type	Machined	Reference Page
Drill Thru	Mounting Panel	10-45

Suggested Hardware (Mount to T-Slot)

Part No.	Series	Qty.	Bolt	T-Nut
75-3627	15 40	1	M8 x 18mm SHCS	Slide-in

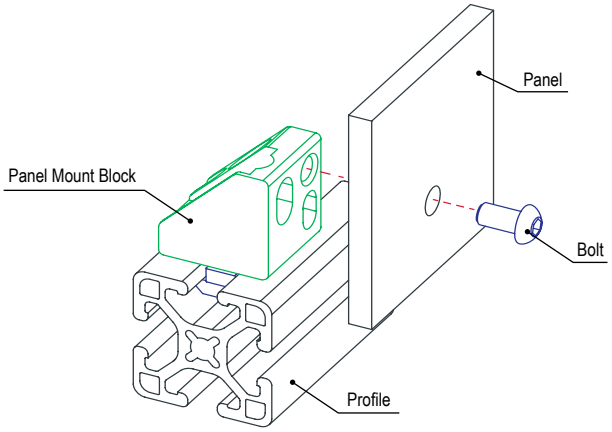

80/20 BUILD YOUR IDEA
More on 80/20® products available at 8020.net

Quick Change Panel Clamp

- Mounts panel flush with profile edge or on profile surface
- Molded extension serves as T-slot stud
- Requires no machining or hardware
- Clip removed with flat tip screwdriver

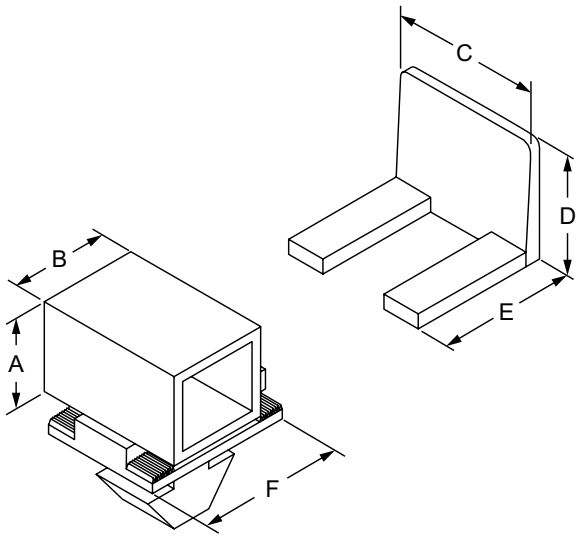

Part No.	Series	Type	Material	Color	A	B	C	D	E	F	Weight
2421	15	Block & Clip	Nylon	Black	.775"	.640"	.980"	.785"	.870"	.920"	.018 lb
2422		Block			.775"	.640"	—	—	—	.920"	.014 lb
2423		Clip			—	—	.980"	.785"	.870"	—	.004 lb
40-2421	40	Block & Clip			19.70mm	16.30mm	24.90mm	19.90mm	22.10mm	23.30mm	.0064 kg
40-2422		Block			19.70mm	16.30mm	—	—	—	23.30mm	.0062 kg
40-2423		Clip			—	—	24.90mm	19.90mm	22.10mm	—	.0019 kg

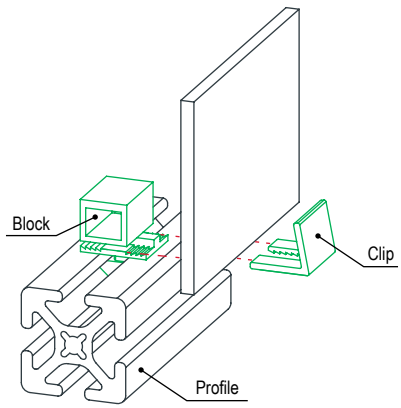

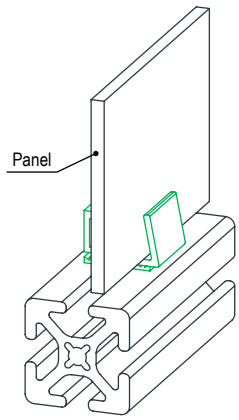

Panels & Doors

Roll-In Panel Mount Bracket

- Panel type/thickness determines hardware to mount panel
- Requires drill through / drill through and tap machining (pg. 10-45)
- Mounts panel flush with profile

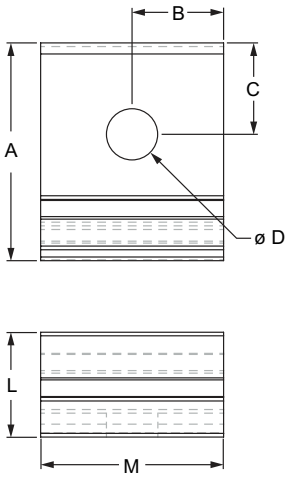

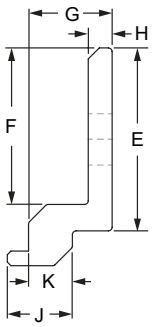

Part No.	Series	Color	A	B	C	D	E	F	G	H	J	K	L	M	Weight
2489	10	Clear	1.190"	.500"	.500"	.281"	1.000"	.855"	.457"	.130"	.356"	.240"	.573"	1.000"	.020 lb
2489-Black	10	Black	1.190"	.500"	.500"	.281"	1.000"	.855"	.457"	.130"	.356"	.240"	.573"	1.000"	.020 lb
2488	15	Clear	1.805"	.750"	.745"	.328"	1.500"	1.305"	.610"	.130"	.476"	.304"	.782"	1.500"	.053 lb
2488-Black	15	Black	1.805"	.750"	.745"	.328"	1.500"	1.305"	.610"	.130"	.476"	.304"	.782"	1.500"	.053 lb
25-2489	25	Clear	30.23mm	12.70mm	12.70mm	7.10mm	25.40mm	21.72mm	11.61mm	3.30mm	9.04mm	6.10mm	14.55mm	25.40mm	.0095 kg
25-2489-Black	25	Black	30.23mm	12.70mm	12.70mm	7.10mm	25.40mm	21.72mm	11.61mm	3.30mm	9.04mm	6.10mm	14.55mm	25.40mm	.0095 kg
40-2488	40	Clear	45.86mm	19.05mm	18.93mm	8.30mm	38.10mm	33.16mm	15.49mm	3.30mm	12.09mm	7.72mm	19.86mm	38.10mm	.0240 kg
40-2488-Black	40	Black	45.86mm	19.05mm	18.93mm	8.30mm	38.10mm	33.16mm	15.49mm	3.30mm	12.09mm	7.72mm	19.86mm	38.10mm	.0240 kg

Material Specifications

Material	Alloy	Finish
Aluminum	6005A – T61	Anodize

Required Machining Services

Machining Type	Machined	Reference Page
Drill Thru	Mounting Panel	10-45

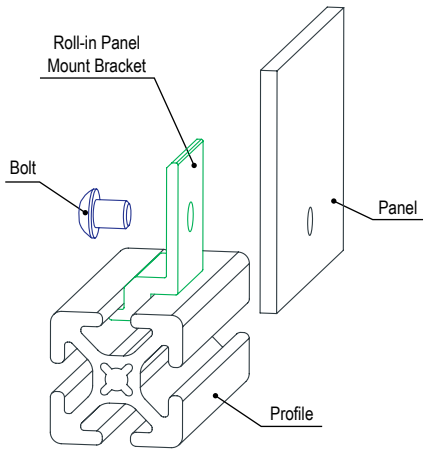

80/20 BUILD YOUR IDEA
More on 80/20® products available at 8020.net

Panel Mount Bracket

- Panel type/thickness determines hardware to mount panel
- Requires drill through / drill through and tap machining (pg. 10-45)
- Surface mounts panel to profile

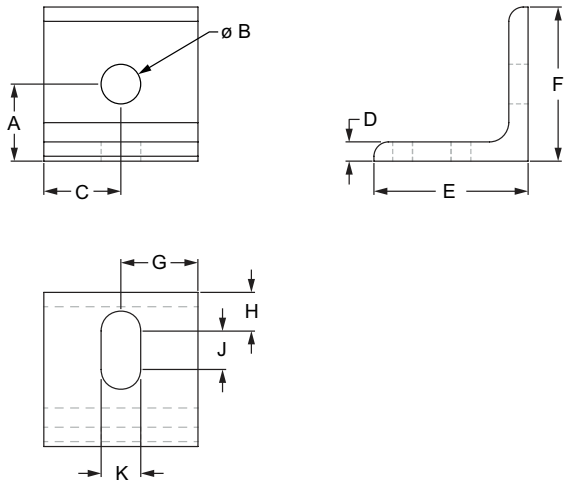

Part No.	Series	Color	A	B	C	D	E	F	G	H	J	K	Weight
2428	10	Clear	.500"	.257"	.500"	.125"	1.000"	1.000"	.500"	.250"	.250"	.257"	.018 lb
2428-Black	10	Black	.500"	.257"	.500"	.125"	1.000"	1.000"	.500"	.250"	.250"	.257"	.018 lb
2430	15 RT	Clear	.500"	.328"	.500"	.125"	1.000"	1.000"	.500"	.281"	.250"	.328"	.019 lb
2430-Black	15 RT	Black	.500"	.328"	.500"	.125"	1.000"	1.000"	.500"	.281"	.250"	.328"	.019 lb
25-2428	25	Clear	12.50mm	6.30mm	12.50mm	3.00mm	25.00mm	25.00mm	12.50mm	6.00mm	6.50mm	6.30mm	.0088 kg
25-2428-Black	25	Black	12.50mm	6.30mm	12.50mm	3.00mm	25.00mm	25.00mm	12.50mm	6.00mm	6.50mm	6.30mm	.0088 kg
40-2430	40 RT	Clear	12.50mm	8.30mm	12.50mm	3.00mm	25.00mm	25.00mm	12.50mm	6.88mm	6.05mm	8.28mm	.0077 kg
40-2430-Black	40 RT	Black	12.50mm	8.30mm	12.50mm	3.00mm	25.00mm	25.00mm	12.50mm	6.88mm	6.05mm	8.28mm	.0077 kg

Material Specifications

Material	Alloy	Finish
Aluminum	6005A – T61	Anodize

Required Machining Services

Machining Type	Machined	Reference Page
Drill Thru	Mounting Panel	10-45

Suggested Hardware (Mount to T-Slot)

Part No.	Series	Qty.	Bolt	T-Nut
3386	10	1	1/4-20 x 3/8 FBHSCS	Economy
3319	15	1	5/16-18 x 1/2 FBHSCS	Economy
75-3404	25	1	M6 x 10mm BHSCS	Economy
75-3421	40	1	M8 x 12mm BHSCS	Economy

Suggested Hardware (Mount to Ready Tube)

Part No.	Series	Qty.	Bolt Assembly
3961	RT	1	5/16-18 x 2.00" BHSCS w/ Washer & Flanged Hex Nut

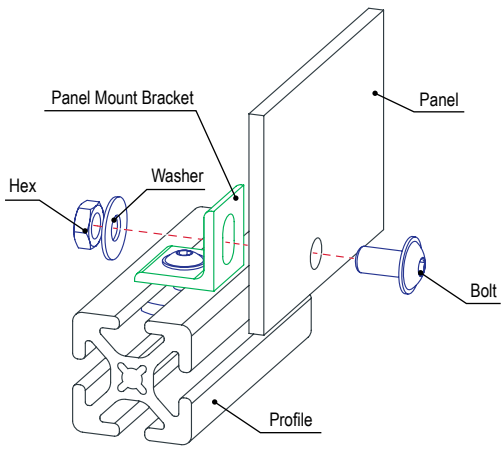

Panels & Doors

Single Panel Holder

- Includes two sides and bolt to connect them
- Hardware to mount to T-slot not included

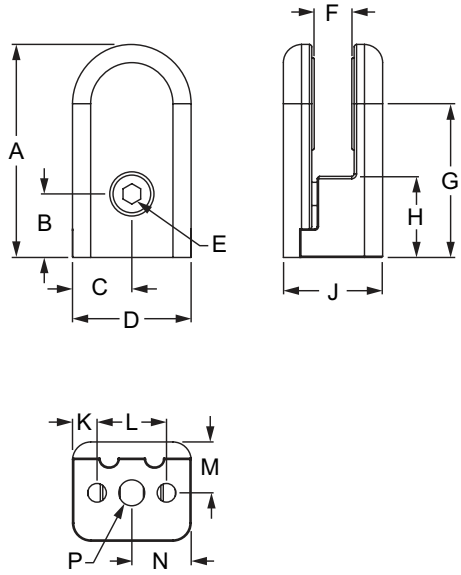

Part No.	Series	Type	A	B	C	D	E	F	G	H	J	K	L	M	N	P
4490	10 15	Single Panel	1.785"	.525"	.489	.978"	M4 hex	.350"	1.270"	.660"	.820"	.203"	.575"	.420"	.490"	5.00mm
65-4490	25 40	Single Panel	45.34mm	13.34mm	12.42mm	24.84mm	M4 hex	8.89mm	32.26mm	16.76mm	20.83mm	12.45mm	24.89mm	10.67mm	12.45mm	5.00mm

Suggested Hardware (Mount Clamp to T-Slot)

Series	Part No.	Qty.	Bolt	Part No.	Qty.	T-Nut
10	3050	1	10-32 x 1/2" BHSCS	3205	1	10-32 Standard
15	3051	1	10-32 x 5/8" BHSCS	3201	1	10-32 Standard
25	11-5312	1	M5 x 12mm BHSCS	25-1954	1	M5 Standard
40	11-5314	1	M5 x 14mm BHSCS	13116	1	M5 Drop-in

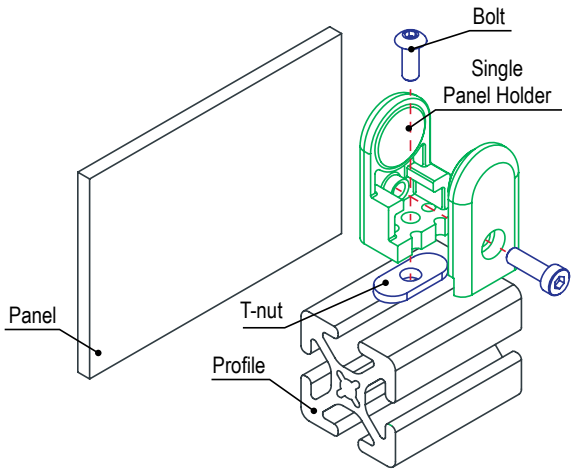

Material Specifications

Part No.	Material	Process	Finish	Weight
4490 65-4490	Die Cast Zinc	Die Casting	Powder Coat	.169 lbs

80/20 BUILD YOUR IDEA
More on 80/20® products available at 8020.net

Snap On Panel Retainer

- Works with 1.00” x 1.00” Quick Frame® or 10 series profiles
- Sold in stock lengths of 72.5”
- Holds .250” panels securely
- Requires no machining

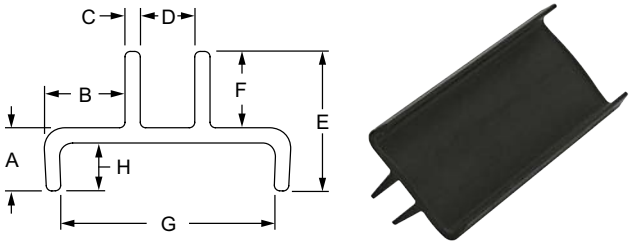

9355

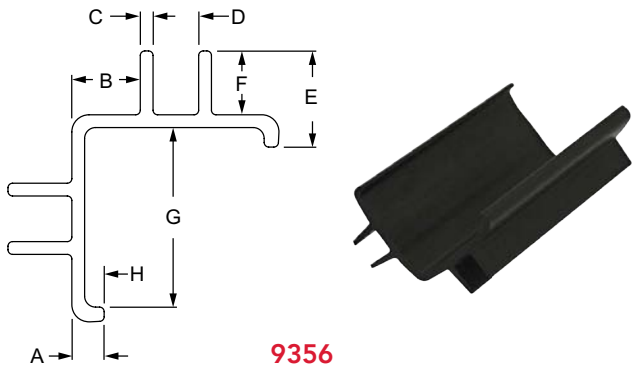

9356

Part No.	Series	A	B	C	D	E	F	G	H	Weight
9355	10 QF	.290”	.370”	.070”	.250”	.640”	.350”	.980”	.220”	.540 lb
9356	QF	.177”	.370”	.070”	.250”	.527”	.350”	.984”	.107”	.868 lb

Material Specifications

Material	Process	Finish	Color
Plastic	Extruded	Matte	Black

Single Panel

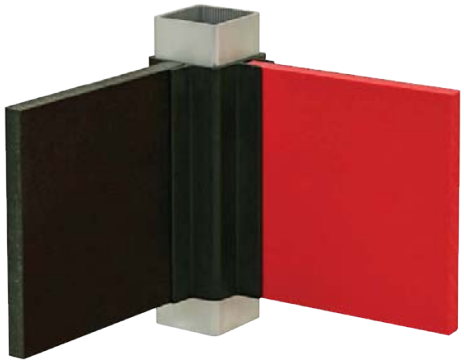

Double Panel

Panels & Doors

Single Arm Narrow Panel Retainer

- Used to mount a panel when it is recessed within the T-slot or on the profile frame
- Requires drill through machining service on the panel (pg. 10-42)

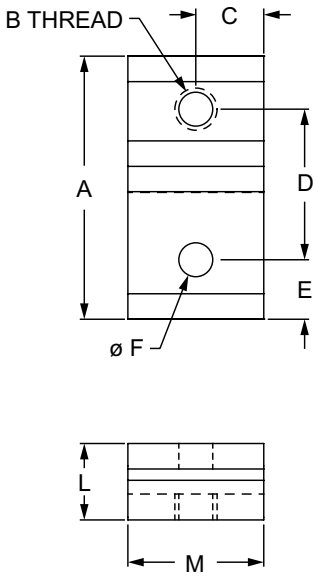

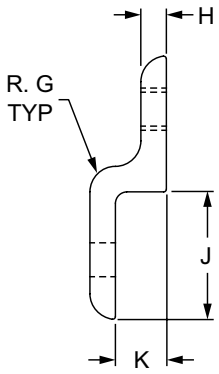

Part No.	Series	A	B	C	D	E	F	G	H	J	K	L	M	Weight
2496	10	1.935"	1/4-20	.500"	1.108"	.437"	.257"	.187"	.188"	.937"	.375"	.543"	1.000"	.039 lb
2496-Black	10	1.935"	1/4-20	.500"	1.108"	.437"	.257"	.187"	.188"	.937"	.375"	.543"	1.000"	.039 lb
2434	15 RT	2.874"	5/16-18	.750"	1.656"	.625"	.328"	.250"	.250"	1.377"	.590"	.840"	1.500"	.117 lb
2434-Black	15 RT	2.874"	5/16-18	.750"	1.656"	.625"	.328"	.250"	.250"	1.377"	.590"	.840"	1.500"	.117 lb
20-2496	20	39.00mm	M5 x 0.8	10.00mm	22.00mm	8.51mm	5.50mm	3.00mm	3.00mm	19.00mm	7.20mm	10.20mm	20.00mm	.0065 kg
20-2496-Black	20	39.00mm	M5 x 0.8	10.00mm	22.00mm	8.51mm	5.50mm	3.00mm	3.00mm	19.00mm	7.20mm	10.20mm	20.00mm	.0065 kg
25-2496	25	48.50mm	M6 x 1.0	12.50mm	27.95mm	10.75mm	6.30mm	4.00mm	4.00mm	23.50mm	9.30mm	13.30mm	25.00mm	.0143 kg
25-2496-Black	25	48.50mm	M6 x 1.0	12.50mm	27.95mm	10.75mm	6.30mm	4.00mm	4.00mm	23.50mm	9.30mm	13.30mm	25.00mm	.0143 kg
30-2434	30	58.00mm	M8 x 1.25	15.00mm	32.50mm	12.50mm	8.30mm	4.00mm	4.00mm	28.00mm	10.59mm	11.20mm	30.00mm	.0194 kg
30-2434-Black	30	58.00mm	M8 x 1.25	15.00mm	32.50mm	12.50mm	8.30mm	4.00mm	4.00mm	28.00mm	10.59mm	11.20mm	30.00mm	.0194 kg
40-2434	40	77.00mm	M8 x 1.25	20.00mm	44.40mm	16.80mm	8.30mm	6.00mm	6.00mm	37.00mm	15.95mm	21.95mm	40.00mm	.0561 kg
40-2434-Black	40	77.00mm	M8 x 1.25	20.00mm	44.40mm	16.80mm	8.30mm	6.00mm	6.00mm	37.00mm	15.95mm	21.95mm	40.00mm	.0561 kg
45-2434	45	87.00mm	M8 x 1.25	22.50mm	48.50mm	19.00mm	8.30mm	6.00mm	6.00mm	42.00mm	17.30mm	23.30mm	45.00mm	.0709 kg
45-2434-Black	45	87.00mm	M8 x 1.25	22.50mm	48.50mm	19.00mm	8.30mm	6.00mm	6.00mm	42.00mm	17.30mm	23.30mm	45.00mm	.0709 kg

80/20 BUILD YOUR IDEA
More on 80/20® products available at 8020.net

Single Arm Narrow Panel Retainer (Continued)

Material Specifications

Part No.	Material	Alloy	Process	Finish
2496	Aluminum	6005A – T61	Milled	Clear Anodize
2496-Black				Black Anodize
2434				Clear Anodize
2434-Black				Black Anodize
20-2496				Clear Anodize
20-2496-Black				Black Anodize
25-2496				Clear Anodize
25-2496-Black				Black Anodize
30-2434				Clear Anodize
30-2434-Black				Black Anodize
40-2434				Clear Anodize
40-2434-Black				Black Anodize
45-2434				Clear Anodize
45-2434-Black				Black Anodize

Required Machining Services

Machining Type	Machined	Reference Page
Panel Retainer Milling	Mounting Panel	10-42

Suggested Hardware (Mount to T-Slot)

Part No.	Series	Qty.	Bolt	T-Nut
3321	10	1	1/4-20 x 1/2 FBHSCS	Economy
3320	15	1	5/16-18 x 11/16 FBHSCS	Economy
75-3581	20	1	M5 x 8mm BHSCS	Economy
75-3404	25	1	M6 x 10mm BHSCS	Economy
75-3615	30	1	M8 x 12mm BHSCS	Roll-in
75-3422	40	1	M8 x 16mm BHSCS	Economy
75-3619	45	1	M8 x 18mm BHSCS	Drop-in

Suggested Hardware (Mount to Ready Tube)

Part No.	Series	Qty.	Bolt Assembly
3960	RT	1	5/16-18 x 2.00" Flange Hex Head Bolt & Flange Hex Nut

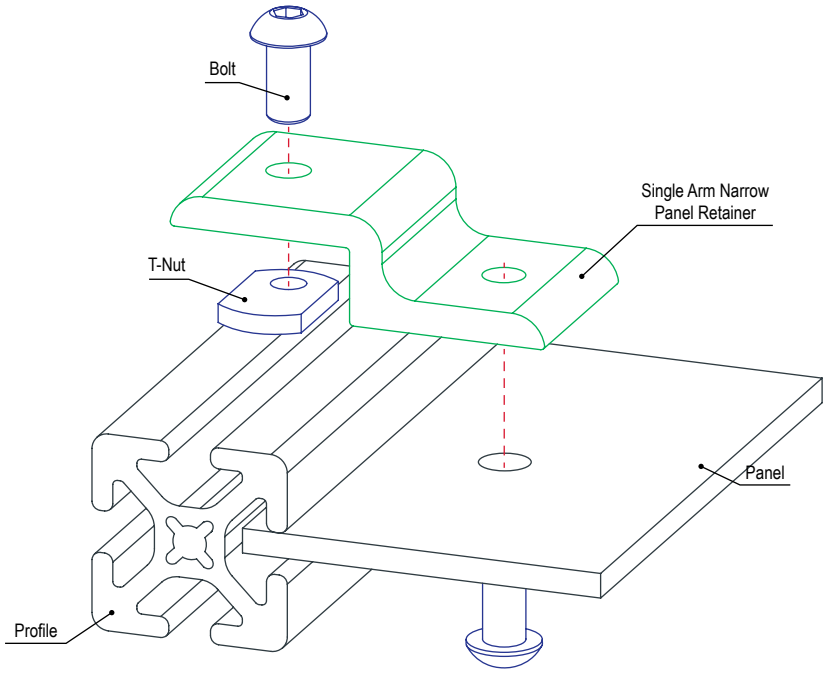

Panels & Doors

Single Arm Wide Panel Retainer

- Used to mount a panel when it is recessed within the T-slot or on the profile frame
- Requires drill through machining service on the panel (pg. 10-42)

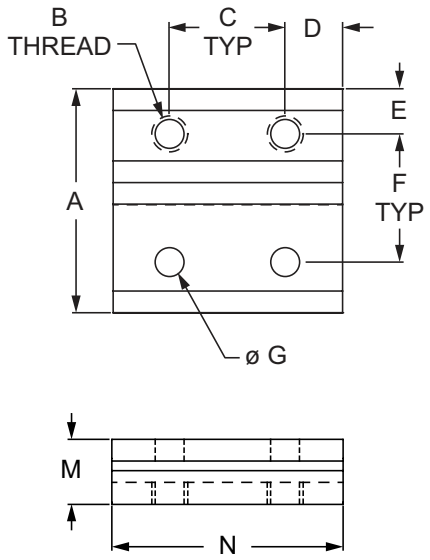

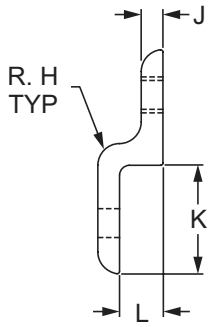

Part No.	Series	A	B	C	D	E	F	G	H	J	K	L	M	N	Weight
2497	10	1.935"	1/4-20	1.000"	.500"	.391"	1.108"	.257"	.187"	.188"	.937"	.375"	.563"	2.000"	.028 lb
2497-Black	10	1.935"	1/4-20	1.000"	.500"	.391"	1.108"	.257"	.187"	.188"	.937"	.375"	.563"	2.000"	.028 lb
2433	15 RT	2.879"	5/16-18	1.500"	.750"	.594"	1.656"	.328"	.250"	.250"	1.379"	.590"	.840"	3.000"	.236 lb
2433-Black	15 RT	2.879"	5/16-18	1.500"	.750"	.594"	1.656"	.328"	.250"	.250"	1.379"	.590"	.840"	3.000"	.236 lb
20-2497	20	39.00mm	M5 x 0.8	20.00mm	10.00mm	8.51mm	22.00mm	5.54mm	3.00mm	3.00mm	19.00mm	7.20mm	10.20mm	40.00mm	.0132 kg
20-2497-Black	20	39.00mm	M5 x 0.8	20.00mm	10.00mm	8.51mm	22.00mm	5.54mm	3.00mm	3.00mm	19.00mm	7.20mm	10.20mm	40.00mm	.0132 kg
25-2497	25	48.50mm	M6 x 1.0	25.00mm	12.50mm	9.80mm	27.95mm	6.30mm	4.00mm	4.00mm	23.50mm	9.30mm	13.30mm	50.00mm	.0129 kg
25-2497-Black	25	48.50mm	M6 x 1.0	25.00mm	12.50mm	9.80mm	27.95mm	6.30mm	4.00mm	4.00mm	23.50mm	9.30mm	13.30mm	50.00mm	.0129 kg
30-2433	30	58.00mm	M8 x 1.25	30.00mm	30.00mm	13.00mm	32.51mm	8.28mm	4.00mm	4.00mm	28.00mm	10.60mm	14.60mm	60.00mm	.0391 kg
30-2433-Black	30	58.00mm	M8 x 1.25	30.00mm	30.00mm	13.00mm	32.51mm	8.28mm	4.00mm	4.00mm	28.00mm	10.60mm	14.60mm	60.00mm	.0391 kg
40-2433	40	77.00mm	M8 x 1.25	40.00mm	20.00mm	15.80mm	44.40mm	8.28mm	6.00mm	6.00mm	37.00mm	16.00mm	22.00mm	80.00mm	.1103 kg
40-2433-Black	40	77.00mm	M8 x 1.25	40.00mm	20.00mm	15.80mm	44.40mm	8.28mm	6.00mm	6.00mm	37.00mm	16.00mm	22.00mm	80.00mm	.1103 kg
45-2433	45	87.00mm	M8 x 1.25	45.00mm	22.50mm	19.50mm	48.50mm	8.28mm	6.00mm	6.00mm	42.00mm	17.30mm	23.30mm	90.00mm	.1441 kg
45-2433-Black	45	87.00mm	M8 x 1.25	45.00mm	22.50mm	19.50mm	48.50mm	8.28mm	6.00mm	6.00mm	42.00mm	17.30mm	23.30mm	90.00mm	.1441 kg

80/20 BUILD YOUR IDEA
More on 80/20® products available at 8020.net

Single Arm Wide Panel Retainer (Continued)

Material Specifications

Part No.	Material	Alloy	Process	Finish
2497	Aluminum	6005A – T61	Milled	Clear Anodize
2497-Black				Black Anodize
2433				Clear Anodize
2433-Black				Black Anodize
20-2497				Clear Anodize
20-2497-Black				Black Anodize
25-2497				Clear Anodize
25-2497-Black				Black Anodize
30-2433				Clear Anodize
30-2433-Black				Black Anodize
40-2433				Clear Anodize
40-2433-Black				Black Anodize
45-2433				Clear Anodize
45-2433-Black				Black Anodize

Required Machining Services

Machining Type	Machined	Reference Page
Panel Retainer Milling	Mounting Panel	10-42

Suggested Hardware (Mount to T-Slot)

Part No.	Series	Qty.	Bolt	T-Nut
3321	10	2	1/4-20 x 1/2 FBHSCS	Economy
3320	15	2	5/16-18 x 11/16 FBHSCS	Economy
75-3581	20	2	M5 x 8mm BHSCS	Economy
75-3404	25	2	M6 x 10mm BHSCS	Economy
75-3615	30	2	M8 x 12mm BHSCS	Roll-in
75-3422	40	2	M8 x 16mm BHSCS	Economy
75-3619	45	2	M8 x 18mm BHSCS	Drop-in

Suggested Hardware (Mount to Ready Tube)

Part No.	Series	Qty.	Bolt Assembly
3960	RT	2	5/16-18 x 2.00" Flange Hex Head Bolt & Flange Hex Nut

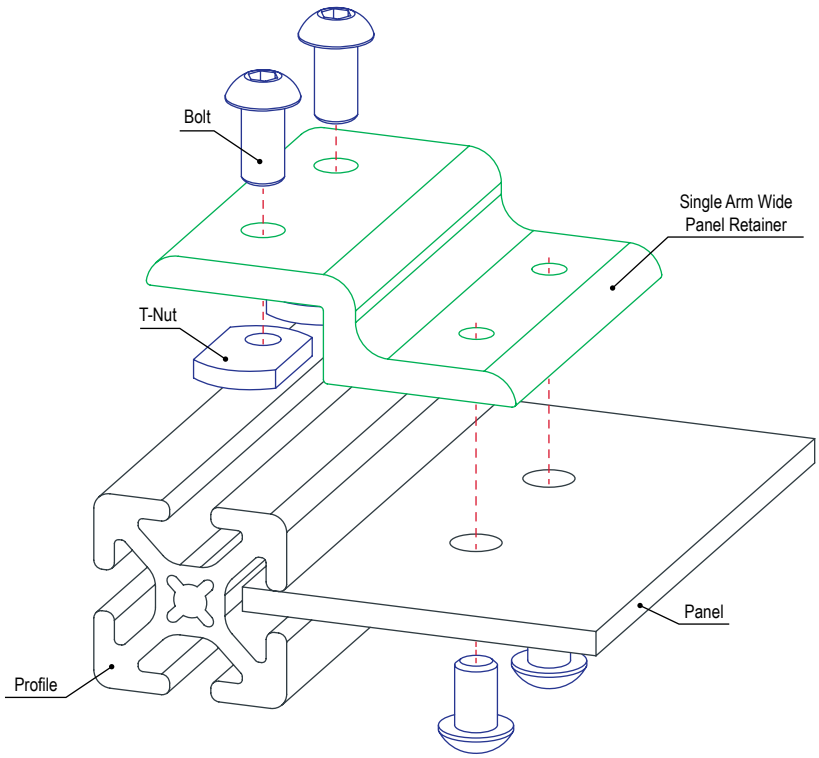

Panels & Doors

Double Arm Narrow Panel Retainer

- Used to mount a panel when it is recessed within the T-slot or on the profile frame
- Requires drill through machining service on the panel (pg. 10-42)

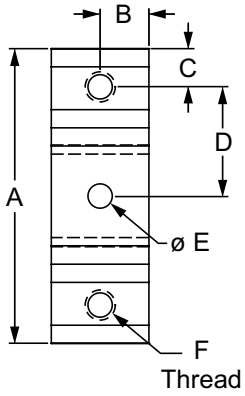

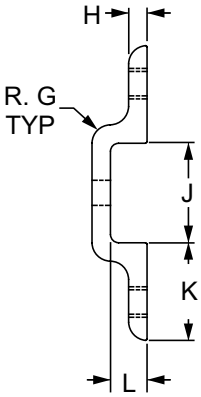

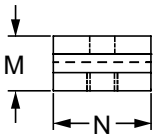

Part No.	Series	A	B	C	D	E	F	G	H	J	K	L	M	N	Weight
2512	10	3.021"	.500"	.392"	1.119"	.257"	1/4-20	.188"	.188"	1.021"	1.000"	.375"	.563"	1.000"	.064 lb
2512-Black	10	3.021"	.500"	.392"	1.119"	.257"	1/4-20	.188"	.188"	1.021"	1.000"	.375"	.563"	1.000"	.064 lb
2515	15 RT	4.523"	.750"	.594"	1.668"	.328"	5/16-18	.250"	.250"	1.523"	1.500"	.590"	.840"	1.500"	.199 lb
2515-Black	15 RT	4.523"	.750"	.594"	1.668"	.328"	5/16-18	.250"	.250"	1.523"	1.500"	.590"	.840"	1.500"	.199 lb
25-2512	25	75.49mm	12.50mm	9.80mm	27.94mm	6.30mm	M6 x 1.0	4.00mm	4.00mm	25.50mm	25.00mm	9.30mm	13.28mm	25.00mm	.0105 kg
25-2512-Black	25	75.49mm	12.50mm	9.80mm	27.94mm	6.30mm	M6 x 1.0	4.00mm	4.00mm	25.50mm	25.00mm	9.30mm	13.28mm	25.00mm	.0105 kg
40-2515	40	120.60mm	20.00mm	15.80mm	44.50mm	8.28mm	M8 x 1.25	6.00mm	6.00mm	40.59mm	40.00mm	16.00mm	22.00mm	40.00mm	.0952 kg
40-2515-Black	40	120.60mm	20.00mm	15.80mm	44.50mm	8.28mm	M8 x 1.25	6.00mm	6.00mm	40.59mm	40.00mm	16.00mm	22.00mm	40.00mm	.0952 kg

80/20 BUILD YOUR IDEA
More on 80/20® products available at 8020.net

Double Arm Narrow Panel Retainer (Continued)

Material Specifications

Part No.	Material	Alloy	Process	Finish
2512	Aluminum	6005A – T61	Milled	Clear Anodize
2512-Black				Black Anodize
2515				Clear Anodize
2515-Black				Black Anodize
25-2512				Clear Anodize
25-2512-Black				Black Anodize
40-2515				Clear Anodize
40-2515-Black				Black Anodize

Required Machining Services

Machining Type	Machined	Reference Page
Panel Retainer Milling	Mounting Panel	10-42

Suggested Hardware (Mount to T-Slot)

Part No.	Series	Qty.	Bolt	T-Nut
3321	10	1	1/4-20 x 1/2 FBHSCS	Economy
3320	15	1	5/16-18 x 11/16 FBHSCS	Economy
75-3404	25	1	M6 x 10mm BHSCS	Economy
75-3422	40	1	M8 x 16mm BHSCS	Economy

Suggested Hardware (Mount to Ready Tube)

Part No.	Series	Qty.	Bolt Assembly
3960	RT	1	5/16-18 x 2.00" Flange Hex Head Bolt & Flange Hex Nut

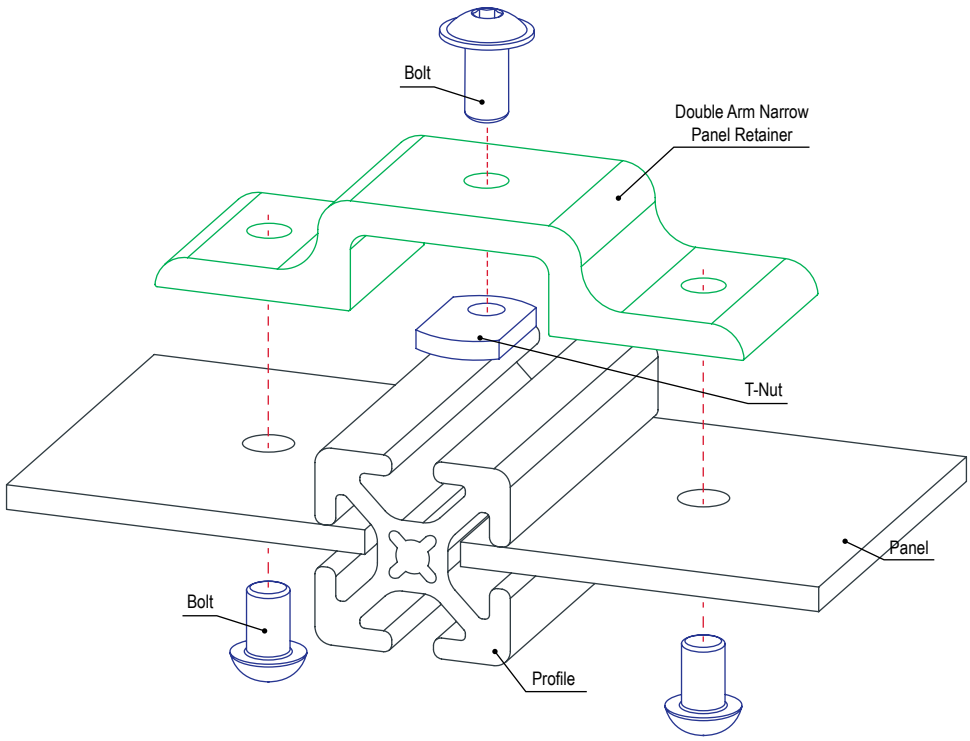

Panels & Doors

Single Arm Narrow Mesh Retainer

- Used to mount a mesh panel when it is recessed within the T-slot or on the profile frame; slotted hole to allow for positioning
- Requires a backing plate (pg. 4-52)

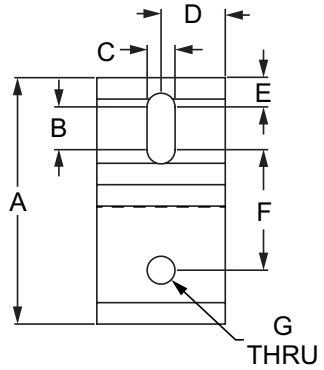

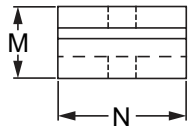

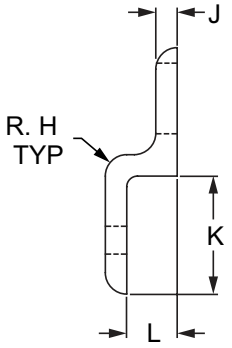

Part No.	Series	A	B	C	D	E	F	G	H	J	K	L	M	N	Weight
2490	10	1.938"	.375"	.257"	.500"	.250"	.875"	.257"	.188"	.188"	.938"	.375"	.563"	1.000"	.037 lb
2490-Black	10	1.938"	.375"	.257"	.500"	.250"	.875"	.257"	.188"	.188"	.938"	.375"	.563"	1.000"	.037 lb
2432	15 RT	2.879"	.500"	.328"	.750"	.344"	1.406"	.328"	.250"	.250"	1.379"	.590"	.840"	1.500"	.113 lb
2432-Black	15 RT	2.879"	.500"	.328"	.750"	.344"	1.406"	.328"	.250"	.250"	1.379"	.590"	.840"	1.500"	.113 lb
20-2490	20	39.00mm	5.46mm	5.54mm	10.00mm	5.77mm	19.25mm	5.54mm	3.00mm	3.00mm	19.00mm	7.19mm	10.19mm	20.00mm	.0059 kg
20-2490-Black	20	39.00mm	5.46mm	5.54mm	10.00mm	5.77mm	19.25mm	5.54mm	3.00mm	3.00mm	19.00mm	7.19mm	10.19mm	20.00mm	.0059 kg
25-2490	25	48.50mm	9.40mm	6.30mm	16.00mm	6.00mm	22.10mm	6.30mm	4.00mm	4.00mm	23.50mm	9.30mm	13.31mm	32.00mm	.0178 kg
25-2490-Black	25	48.50mm	9.40mm	6.30mm	16.00mm	6.00mm	22.10mm	6.30mm	4.00mm	4.00mm	23.50mm	9.30mm	13.31mm	32.00mm	.0178 kg
30-2432	30	58.00mm	9.75mm	8.28mm	15.00mm	8.13mm	27.64mm	8.28mm	4.00mm	4.00mm	28.00mm	10.60mm	14.60mm	30.00mm	.0499 kg
30-2432-Black	30	58.00mm	9.75mm	8.28mm	15.00mm	8.13mm	27.64mm	8.28mm	4.00mm	4.00mm	28.00mm	10.60mm	14.60mm	30.00mm	.0499 kg
40-2432	40	77.00mm	13.31mm	8.28mm	20.00mm	9.00mm	37.90mm	8.28mm	6.00mm	6.00mm	37.00mm	16.00mm	22.00mm	40.00mm	.0536 kg
40-2432-Black	40	77.00mm	13.31mm	8.28mm	20.00mm	9.00mm	37.90mm	8.28mm	6.00mm	6.00mm	37.00mm	16.00mm	22.00mm	40.00mm	.0536 kg
45-2432	45	87.00mm	18.69mm	8.28mm	22.50mm	10.16mm	39.14mm	8.28mm	6.00mm	6.00mm	42.00mm	17.30mm	23.29mm	45.00mm	.0692 kg
45-2432-Black	45	87.00mm	18.69mm	8.28mm	22.50mm	10.16mm	39.14mm	8.28mm	6.00mm	6.00mm	42.00mm	17.30mm	23.29mm	45.00mm	.0692 kg

80/20 BUILD YOUR IDEA
More on 80/20® products available at 8020.net

Single Arm Narrow Mesh Retainer (Continued)

Material Specifications

Part No.	Material	Alloy	Process	Finish
2490	Aluminum	6005A – T61	Milled	Clear Anodize
2490-Black				Black Anodize
2432				Clear Anodize
2432-Black				Black Anodize
20-2490				Clear Anodize
20-2490-Black				Black Anodize
25-2490				Clear Anodize
25-2490-Black				Black Anodize
30-2432				Clear Anodize
30-2432-Black				Black Anodize
40-2432				Clear Anodize
40-2432-Black				Black Anodize
45-2432				Clear Anodize
45-2432-Black				Black Anodize

Suggested Hardware (Mount to T-Slot)

Part No.	Series	Qty.	Bolt	T-Nut
3321	10	1	1/4-20 x 1/2 FBHSCS	Economy
3320	15	1	5/16-18 x 11/16 FBHSCS	Economy
75-3581	20	1	M5 x 8mm BHSCS	Economy
75-3404	25	1	M6 x 10mm BHSCS	Economy
75-3615	30	1	M8 x 12mm BHSCS	Roll-in
75-3422	40	1	M8 x 16mm BHSCS	Economy
75-3619	45	1	M8 x 18mm BHSCS	Drop-in

Suggested Hardware (Mount to Ready Tube)

Part No.	Series	Qty.	Bolt Assembly
3960	RT	1	5/16-18 x 2.00" Flange Hex Head Bolt & Flange Hex Nut

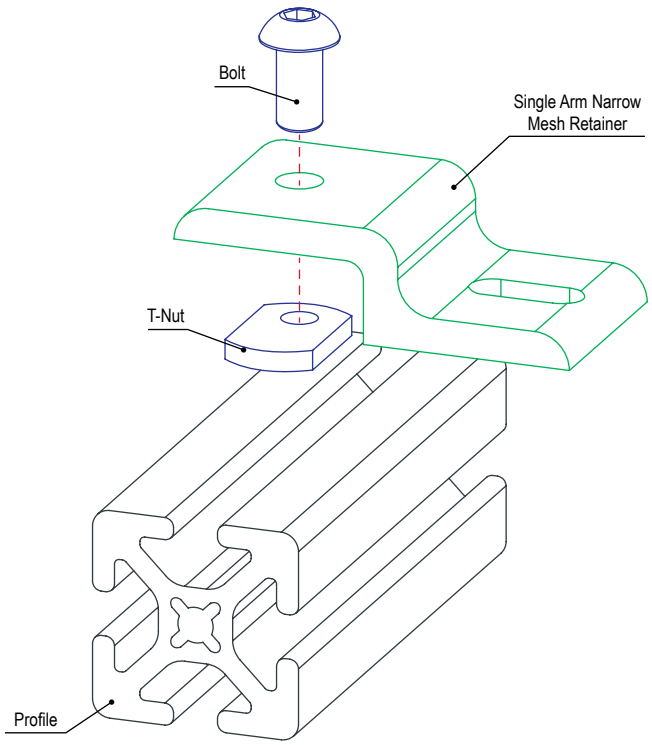

Panels & Doors

Single Arm Wide Mesh Retainer

- Used to mount a mesh panel when it is recessed within the T-slot or on the profile frame; slotted hole to allow for positioning
- Requires backing plate (pg. 4-53)

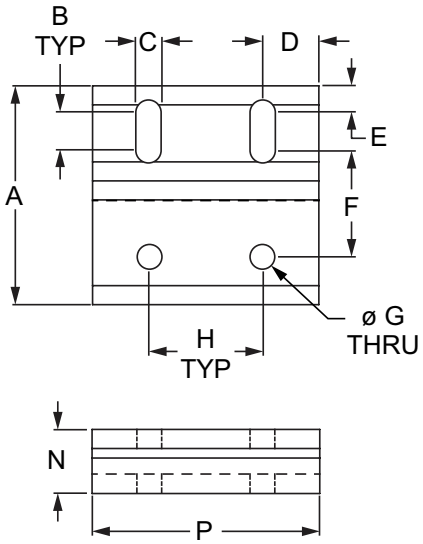

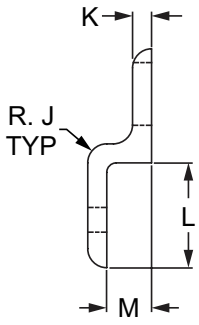

Part No.	Series	A	B	C	D	E	F	G	H	J	K	L	M	N	P	Weight
2493	10	1.938"	.375"	.257"	.500"	.250"	.875"	.257"	1.000"	.188"	.188"	.938"	.375"	.563"	2.000"	.073 lb
2493-Black	10	1.938"	.375"	.257"	.500"	.250"	.875"	.257"	1.000"	.188"	.188"	.938"	.375"	.563"	2.000"	.073 lb
2431	15 RT	2.879"	.500"	.328"	.750"	.344"	1.406"	.328"	1.500"	.250"	.250"	1.379"	.590"	.840"	3.000"	.228 lb
2431-Black	15 RT	2.879"	.500"	.328"	.750"	.344"	1.406"	.328"	1.500"	.250"	.250"	1.379"	.590"	.840"	3.000"	.228 lb
20-2493	20	39.00mm	27.77mm	5.54mm	10.00mm	5.77mm	19.25mm	5.54mm	20.00mm	3.00mm	3.00mm	19.00mm	7.18mm	10.19mm	40.00mm	.0127 kg
20-2493-Black	20	39.00mm	27.77mm	5.54mm	10.00mm	5.77mm	19.25mm	5.54mm	20.00mm	3.00mm	3.00mm	19.00mm	7.18mm	10.19mm	40.00mm	.0127 kg
25-2493	25	48.49mm	9.40mm	6.30mm	12.50mm	6.00mm	22.10mm	6.30mm	25.00mm	4.00mm	4.00mm	23.50mm	9.30mm	13.30mm	50.00mm	.0124 kg
25-2493-Black	25	48.49mm	9.40mm	6.30mm	12.50mm	6.00mm	22.10mm	6.30mm	25.00mm	4.00mm	4.00mm	23.50mm	9.30mm	13.30mm	50.00mm	.0124 kg
30-2431	30	58.00mm	9.75mm	8.28mm	15.00mm	8.13mm	27.64mm	8.28mm	30.00mm	4.00mm	4.00mm	28.00mm	10.60mm	14.58mm	60.00mm	.0369 kg
30-2431-Black	30	58.00mm	9.75mm	8.28mm	15.00mm	8.13mm	27.64mm	8.29mm	30.00mm	4.00mm	4.00mm	28.00mm	10.60mm	14.58mm	60.00mm	.0369 kg
40-2431	40	77.00mm	13.31mm	8.28mm	20.00mm	9.00mm	37.90mm	8.28mm	40.00mm	6.00mm	6.00mm	37.00mm	16.00mm	22.00mm	80.00mm	.1074 kg
40-2431-Black	40	77.00mm	13.31mm	8.28mm	20.00mm	9.00mm	37.90mm	8.28mm	40.00mm	6.00mm	6.00mm	37.00mm	16.00mm	22.00mm	80.00mm	.1074 kg
45-2431	45	87.00mm	18.69mm	8.28mm	22.50mm	10.16mm	39.14mm	8.28mm	45.00mm	6.00mm	6.00mm	41.00mm	17.30mm	23.30mm	90.00mm	.1372 kg
45-2431-Black	45	87.00mm	18.69mm	8.28mm	22.50mm	10.16mm	39.14mm	8.28mm	45.00mm	6.00mm	6.00mm	41.00mm	17.30mm	23.30mm	90.00mm	.1372 kg

80/20 BUILD YOUR IDEA
More on 80/20® products available at 8020.net

Single Arm Wide Mesh Retainer (Continued)

Material Specifications

Part No.	Material	Alloy	Process	Finish
2493	Aluminum	6005A – T61	Milled	Clear Anodize
2493-Black				Black Anodize
2431				Clear Anodize
2431-Black				Black Anodize
20-2493				Clear Anodize
20-2493-Black				Black Anodize
25-2493				Clear Anodize
25-2493-Black				Black Anodize
30-2431				Clear Anodize
30-2431-Black				Black Anodize
40-2431				Clear Anodize
40-2431-Black				Black Anodize
45-2431				Clear Anodize
45-2431-Black				Black Anodize

Suggested Hardware (Mount to T-Slot)

Part No.	Series	Qty.	Bolt	T-Nut
3321	10	2	1/4-20 x 1/2 FBHSCS	Economy
3320	15	2	5/16-18 x 11/16 FBHSCS	Economy
75-3581	20	2	M5 x 8mm BHSCS	Economy
75-3404	25	2	M6 x 10mm BHSCS	Economy
75-3615	30	2	M8 x 12mm BHSCS	Roll-in
75-3422	40	2	M8 x 16mm BHSCS	Economy
75-3619	45	2	M8 x 18mm BHSCS	Drop-in

Suggested Hardware (Mount to Ready Tube)

Part No.	Series	Qty.	Bolt Assembly
3960	RT	2	5/16-18 x 2.00" Flange Hex Head Bolt & Flange Hex Nut

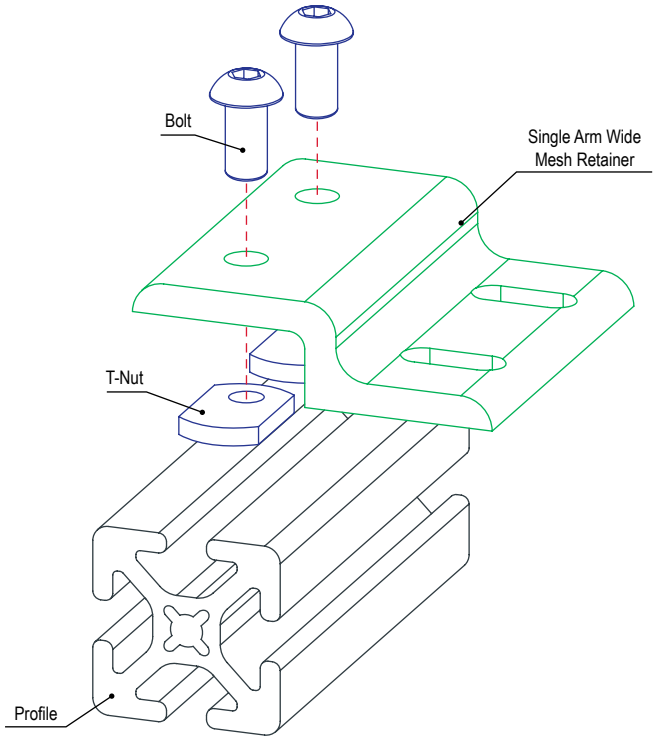

Panels & Doors

Double Arm Narrow Mesh Retainer

- Used to mount a mesh panel when it is recessed within the T-slot or on the profile frame; slotted hole to allow for positioning
- Requires backing plates (pg. 4-52)

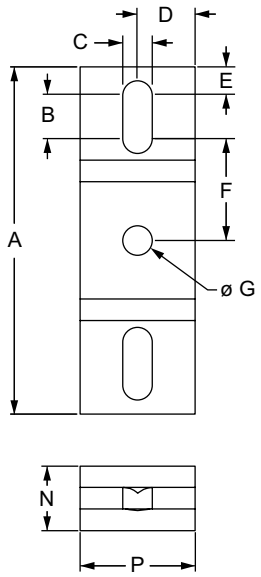

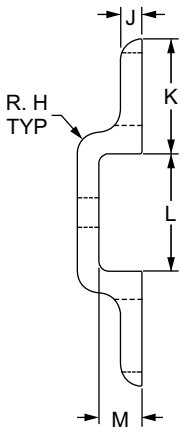

Part No.	Series	A	B	C	D	E	F	G	H	J	K	L	M	N	P	Weight
2521	10	3.020"	.375"	.257"	.500"	.249"	.886"	.257"	.188"	.188"	1.000"	1.020"	.375"	.563"	1.000"	.061 lb
2521-Black	10	3.020"	.375"	.257"	.500"	.249"	.886"	.257"	.188"	.188"	1.000"	1.020"	.375"	.563"	1.000"	.061 lb
2517	15 RT	4.522"	.500"	.328"	.750"	.344"	1.417"	.328"	.250"	.250"	1.500"	1.522"	.590"	.840"	1.500"	.188 lb
2517-Black	15 RT	4.522"	.500"	.328"	.750"	.344"	1.417"	.328"	.250"	.250"	1.500"	1.522"	.590"	.840"	1.500"	.188 lb
25-2521	25	75.50mm	9.40mm	6.30mm	16.00mm	6.00mm	22.35mm	6.30mm	4.00mm	4.00mm	25.00mm	25.50mm	9.30mm	13.30mm	32.00mm	.0288 kg
25-2521-Black	25	75.50mm	9.40mm	6.30mm	16.00mm	6.00mm	22.35mm	6.30mm	4.00mm	4.00mm	25.00mm	25.50mm	9.30mm	13.30mm	32.00mm	.0288 kg
40-2517	40	120.59mm	13.30mm	8.30mm	20.00mm	9.00mm	38.00mm	8.30mm	6.00mm	6.00mm	40.00mm	40.59mm	15.95mm	21.95mm	40.00mm	.0913 kg
40-2517-Black	40	120.59mm	13.30mm	8.30mm	20.00mm	9.00mm	38.00mm	8.30mm	6.00mm	6.00mm	40.00mm	40.59mm	15.95mm	21.95mm	40.00mm	.0913 kg

Material Specifications

Part No.	Material	Alloy	Process	Finish
2521	Aluminum	6005A – T61	Milled	Clear Anodize
2521-Black				Black Anodize
2517				Clear Anodize
2517-Black				Black Anodize
25-2521				Clear Anodize
25-2521-Black				Black Anodize
40-2517				Clear Anodize
40-2517-Black				Black Anodize

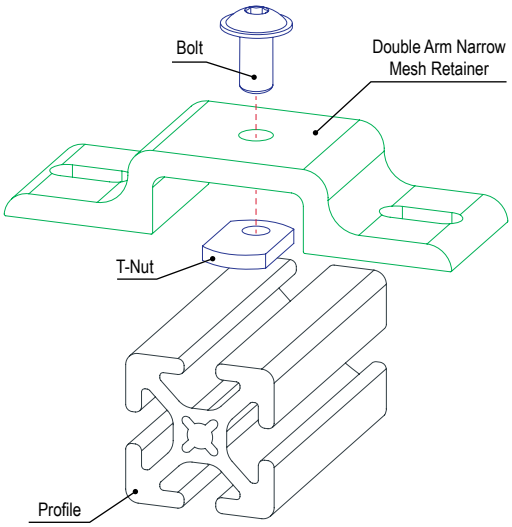

Suggested Hardware (Mount to T-Slot)

Part No.	Series	Qty.	Bolt	T-Nut
3321	10	1	1/4-20 x 1/2 FBHSCS	Economy
3320	15	1	5/16-18 x 11/16 FBHSCS	Economy
75-3404	25	1	M6 x 10mm BHSCS	Economy
75-3422	40	1	M8 x 16mm BHSCS	Economy

Suggested Hardware (Mount to Ready Tube)

Part No.	Series	Qty.	Bolt Assembly
3960	RT	1	5/16-18 x 2.00" Flange Hex Head Bolt & Flange Hex Nut

80/20 BUILD YOUR IDEA
More on 80/20® products available at 8020.net

Double Arm Wide Mesh Retainer

- Used to mount a mesh panel when it is recessed within the T-slot or on the profile frame; slotted hole to allow for positioning
- Requires backing plates (pg. 4-53)

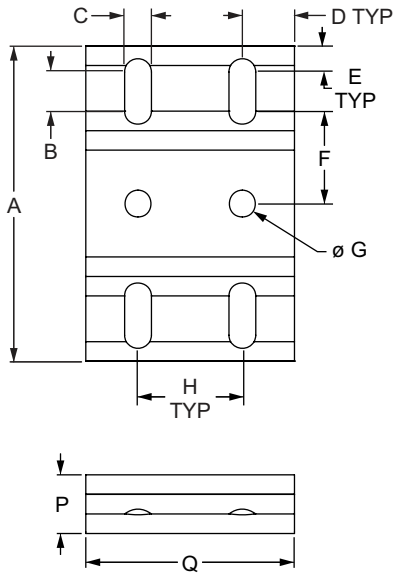

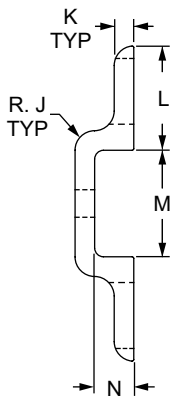

Part No.	Series	A	B	C	D	E	F	G	H	J	K	L	M	N	P	Q	Weight
2523	10	3.020"	.375"	.257"	.500"	.250"	.886"	.257"	1.000"	.188"	.188"	1.000"	1.020"	.375"	.563"	2.000"	.118 lb
2523-Black	10	3.020"	.375"	.257"	.500"	.250"	.886"	.257"	1.000"	.188"	.188"	1.000"	1.020"	.375"	.563"	2.000"	.118 lb
2519	15 RT	4.523"	.500"	.328"	.750"	.344"	1.418"	.328"	1.500"	.250"	.250"	1.500"	1.523"	.590"	.840"	3.000"	.377 lb
2519-Black	15 RT	4.523"	.500"	.328"	.750"	.344"	1.418"	.328"	1.500"	.250"	.250"	1.500"	1.523"	.590"	.840"	3.000"	.377 lb
25-2523	25	75.50mm	9.40mm	6.30mm	12.50mm	6.00mm	22.35mm	6.30mm	25.00mm	4.00mm	4.00mm	25.00mm	25.50mm	9.30mm	13.40mm	50.00mm	.0439 kg
25-2523-Black	25	75.50mm	9.40mm	6.30mm	12.50mm	6.00mm	22.35mm	6.30mm	25.00mm	4.00mm	4.00mm	25.00mm	25.50mm	9.30mm	13.40mm	50.00mm	.0439 kg
40-2519	40	120.60mm	13.30mm	8.30mm	20.00mm	9.00mm	38.00mm	8.30mm	40.00mm	6.00mm	6.00mm	40.00mm	40.60mm	16.00mm	22.00mm	80.00mm	.1796 kg
40-2519-Black	40	120.60mm	13.30mm	8.30mm	20.00mm	9.00mm	38.00mm	8.30mm	40.00mm	6.00mm	6.00mm	40.00mm	40.60mm	16.00mm	22.00mm	80.00mm	.1796 kg

Material Specifications

Part No.	Material	Alloy	Process	Finish
2523	Aluminum	6005A – T61	Milled	Clear Anodize
2523-Black				Black Anodize
2519				Clear Anodize
2519-Black				Black Anodize
25-2523				Clear Anodize
25-2523-Black				Black Anodize
40-2519				Clear Anodize
40-2519-Black				Black Anodize

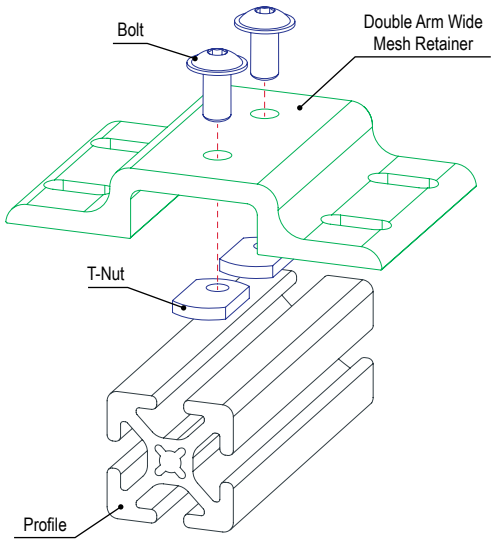

Suggested Hardware (Mount to T-Slot)

Part No.	Series	Qty.	Bolt	T-Nut
3321	10	2	1/4-20 x 1/2 FBHSCS	Economy
3320	15	2	5/16-18 x 11/16 FBHSCS	Economy
75-3404	25	2	M6 x 10mm BHSCS	Economy
75-3422	40	2	M8 x 16mm BHSCS	Economy

Suggested Hardware (Mount to Ready Tube)

Part No.	Series	Qty.	Bolt Assembly
3960	RT	2	5/16-18 x 2.00" Flg. Hex Head Bolt & Flg. Hex Nut

Panels & Doors

Narrow Backing Plate

- Used with the single arm narrow mesh retainer (pg. 4-46) and double arm narrow mesh retainer (pg. 4-50) to secure wire mesh or panels

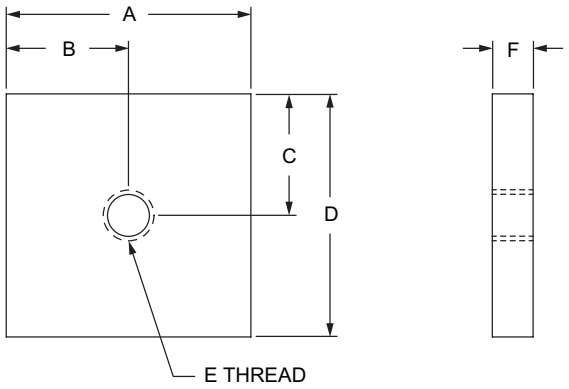

Part No.	Series	Material	Alloy	Process	Finish	A	B	C	D	E	F	Weight
2492	10	Aluminum	6005A – T61	Milled	Clear Anodize	1.000"	.500"	.500"	1.000"	1/4-20	.188"	.018 lb
2492-Black	10				Black Anodize	1.000"	.500"	.500"	1.000"	1/4-20	.188"	.018 lb
2438	15 RT				Clear Anodize	1.50"	.750"	.745"	1.49"	5/16-18	.250"	.053 lb
2438-Black	15 RT				Black Anodize	1.50"	.750"	.745"	1.49"	5/16-18	.250"	.053 lb
20-2492	20				Clear Anodize	32.00mm	16.00mm	9.53mm	19.05mm	M5 x 0.8	4.78mm	.0077 kg
20-2492-Black	20				Black Anodize	32.00mm	16.00mm	9.53mm	19.05mm	M5 x 0.8	4.78mm	.0077 kg
25-2492	25				Clear Anodize	32.00mm	16.00mm	12.50mm	25.00mm	M6 x 1.0	4.00mm	.0081kg
25-2492-Black	25				Black Anodize	32.00mm	16.00mm	12.50mm	25.00mm	M6 x 1.0	4.00mm	.0081 kg
30-2438	30				Clear Anodize	30.00mm	15.00mm	12.50mm	25.00mm	M8 x 1.25	4.00mm	.0100 kg
30-2438-Black	30				Black Anodize	30.00mm	15.00mm	12.50mm	25.00mm	M8 x 1.25	4.00mm	.0100 kg
40-2438	40				Clear Anodize	40.00mm	20.00mm	19.89mm	39.80mm	M8 x 1.25	6.00mm	.0245 kg
40-2438-Black	40				Black Anodize	40.00mm	20.00mm	19.89mm	39.80mm	M8 x 1.25	6.00mm	.0245 kg
45-2438	45				Clear Anodize	45.00mm	22.50mm	19.89mm	39.80mm	M8 x 1.25	6.00mm	.0278 kg
45-2438-Black	45				Black Anodize	45.00mm	22.50mm	19.89mm	39.80mm	M8 x 1.25	6.00mm	.0278 kg

Suggested Hardware (Mount to Backing Plate)

Part No.	Series	Qty.	Bolt
3063	10	1	1/4-20 x 1/2 BHSCS
3114	15 RT	1	5/16-18 x 3/4 BHSCS
11-5310	20	1	M5 x 10mm BHSCS
13-6312	25	1	M6 x 12mm BHSCS
11-8316	30	1	M8 x 16mm BHSCS
13-8320	40	1	M8 x 20mm BHSCS
11-8318	45	1	M8 x 18mm BHSCS

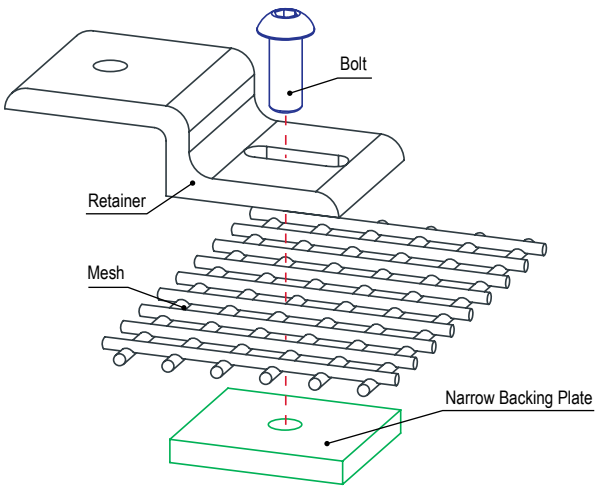

80/20 BUILD YOUR IDEA
More on 80/20® products available at 8020.net

Wide Backing Plate

- Used with the single arm wide mesh retainer (pg. 4-48) and double arm wide mesh retainer (pg. 4-51) to secure wire mesh or panels

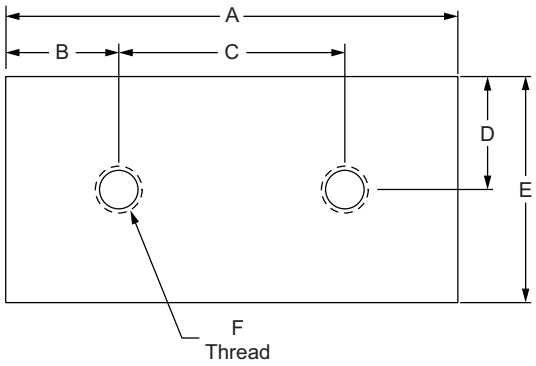

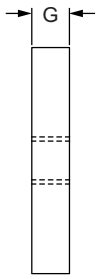

Part No.	Series	Material	Alloy	Process	Finish	A	B	C	D	E	F	G	Weight
2495	10	Aluminum	6005A – T61	Milled	Clear Anodize	2.000"	.500"	1.000"	.500"	1.000"	1/4-20	.188"	.036 lb
2495-Black	10				Black Anodize	2.000"	.500"	1.000"	.500"	1.000"	1/4-20	.188"	.036 lb
2437	15 RT				Clear Anodize	3.000"	.750"	1.500"	.745"	1.49"	5/16-18	.250"	.104 lb
2437-Black	15 RT				Black Anodize	3.000"	.750"	1.500"	.745"	1.49"	5/16-18	.250"	.104 lb
20-2495	20				Clear Anodize	40.00mm	10.00mm	20.00mm	9.53mm	19.05mm	M5 x 0.8	4.78mm	.0095 kg
20-2495-Black	20				Black Anodize	40.00mm	10.00mm	20.00mm	9.53mm	19.05mm	M5 x 0.8	4.78mm	.0095 kg
25-2495	25				Clear Anodize	50.00mm	12.50mm	25.00mm	12.50mm	25.00mm	M6 x 1.0	4.00mm	.0127 kg
25-2495-Black	25				Black Anodize	50.00mm	12.50mm	25.00mm	12.50mm	25.00mm	M6 x 1.0	4.00mm	.0127 kg
30-2437	30				Clear Anodize	60.00mm	15.00mm	30.00mm	12.50mm	25.00mm	M8 x 1.25	4.00mm	.0150 kg
30-2437-Black	30				Black Anodize	60.00mm	15.00mm	30.00mm	12.50mm	25.00mm	M8 x 1.25	4.00mm	.0150 kg
40-2437	40				Clear Anodize	80.00mm	20.00mm	40.00mm	19.89mm	39.80mm	M8 x 1.25	6.00mm	.0490 kg
40-2437-Black	40				Black Anodize	80.00mm	20.00mm	40.00mm	19.89mm	39.80mm	M8 x 1.25	6.00mm	.0490 kg
45-2437	45				Clear Anodize	90.00mm	22.50mm	45.00mm	19.89mm	39.80mm	M8 x 1.25	6.00mm	.0553 kg
45-2437-Black	45				Black Anodize	90.00mm	22.50mm	45.00mm	19.89mm	39.80mm	M8 x 1.25	6.00mm	.0553 kg

Suggested Hardware (Mount to Backing Plate)

Part No.	Series	Qty.	Bolt
3063	10	2	1/4-20 x 1/2 BHSCS
3114	15 RT	2	5/16-18 x 3/4 BHSCS
11-5310	20	2	M5 x 10mm BHSCS
13-6312	25	2	M6 x 12mm BHSCS
11-8316	30	2	M8 x 16mm BHSCS
13-8320	40	2	M8 x 20mm BHSCS
11-8318	45	2	M8 x 18mm BHSCS

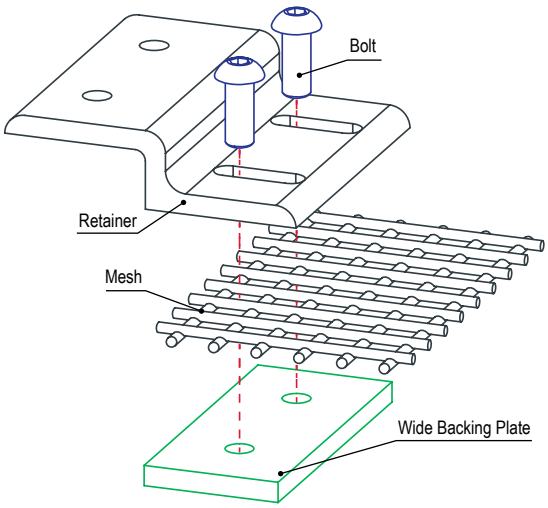

Panels & Doors

Single Arm Narrow Mesh Retainer with Narrow Backing Plate

- Consists of one single arm narrow mesh retainer (pg. 4-46) and one narrow backing plate (pg. 4-52)

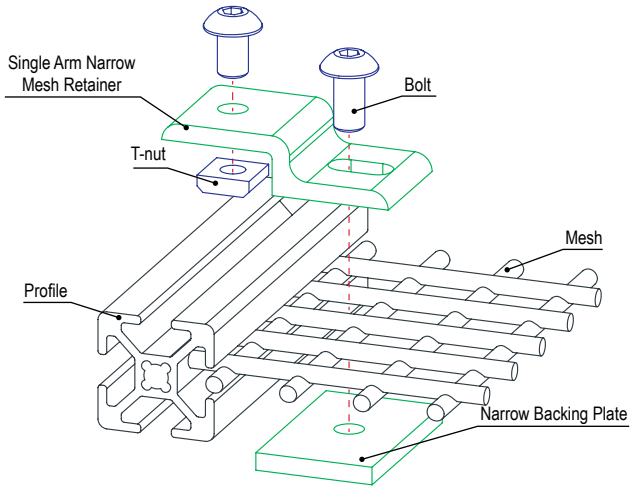

Part No.	Series	Material	Alloy	Process	Finish	Weight
2491	10	Aluminum	6005A – T61	Milled	Clear Anodize	.054 lb
2491-Black	10				Black Anodize	.054 lb
2436	15 RT				Clear Anodize	.165 lb
2436-Black	15 RT				Black Anodize	.165 lb
20-2491	20				Clear Anodize	.0222 kg
20-2491-Black	20				Black Anodize	.0222 kg
25-2491	25				Clear Anodize	.0259 kg
25-2491-Black	25				Black Anodize	.0259 kg
30-2436	30				Clear Anodize	.0259 kg
30-2436-Black	30				Black Anodize	.0259 kg
40-2436	40				Clear Anodize	.0786 kg
40-2436-Black	40				Black Anodize	.0786 kg
45-2436	45				Clear Anodize	.0970 kg
45-2436-Black	45				Black Anodize	.0970 kg

Suggested Hardware (Mount to T-Slot)

Part No.	Series	Qty.	Bolt	T-Nut
3321	10	1	1/4-20 x 1/2 FBHSCS	Economy
3320	15 RT	1	5/16-18 x 11/16 FBHSCS	Economy
75-3581	20	1	M5 x 8mm BHSCS	Economy
75-3404	25	1	M6 x 10mm BHSCS	Economy
75-3615	30	1	M8 x 12mm BHSCS	Roll-in
75-3422	40	1	M8 x 16mm BHSCS	Economy
75-3619	45	1	M8 x 18mm BHSCS	Drop-in

Suggested Hardware (Mount to Backing Plate)

Part No.	Series	Qty.	Bolt
3063	10	1	1/4-20 x 1/2 BHSCS
3114	15 RT	1	5/16-18 x 3/4 BHSCS
11-5310	20	1	M5 x 10mm BHSCS
13-6312	25	1	M6 x 12mm BHSCS
11-8316	30	1	M8 x 16mm BHSCS
13-8320	40	1	M8 x 20mm BHSCS
11-8318	45	1	M8 x 18mm BHSCS

Suggested Hardware (Mount to Ready Tube)

Part No.	Series	Qty.	Bolt Assembly
3960	RT	1	5/16-18 x 2.00" Flange Hex Head Bolt & Flange Hex Nut

80/20 BUILD YOUR IDEA
More on 80/20® products available at 8020.net

Single Arm Wide Mesh Retainer with Wide Backing Plate

- Consists of one single arm wide mesh retainer (pg. 4-48) and one wide backing plate (pg. 4-53)

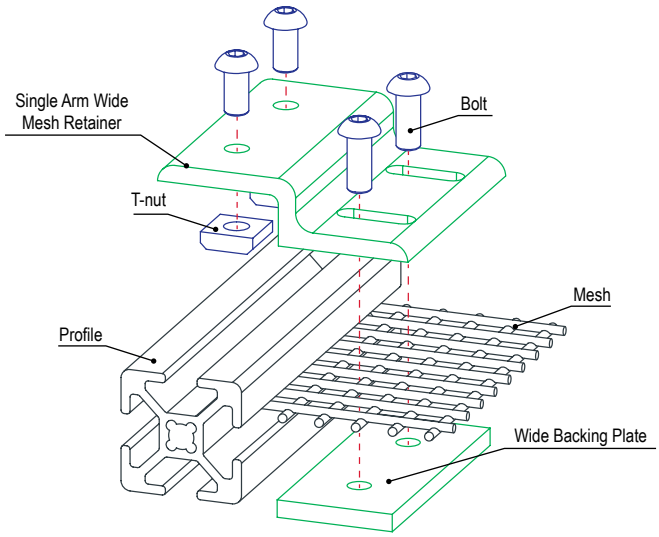

Part No.	Series	Material	Alloy	Process	Finish	Weight
2494	10	Aluminum	6005A – T61	Milled	Clear Anodize	.109 lb
2494-Black	10				Black Anodize	.109 lb
2435	15 RT				Clear Anodize	.331 lb
2435-Black	15 RT				Black Anodize	.331 lb
20-2494	20				Clear Anodize	.0218 kg
20-2494-Black	20				Black Anodize	.0218 kg
25-2494	25				Clear Anodize	.0400 kg
25-2494-Black	25				Black Anodize	.0400 kg
30-2435	30				Clear Anodize	.0517 kg
30-2435-Black	30				Black Anodize	.0517 kg
40-2435	40				Clear Anodize	.1565 kg
40-2435-Black	40				Black Anodize	.1565 kg
45-2435	45				Clear Anodize	.1918 kg
45-2435-Black	45				Black Anodize	.1918 kg

Suggested Hardware (Mount to T-Slot)

Part No.	Series	Qty.	Bolt	T-Nut
3321	10	2	1/4-20 x 1/2 FBHSCS	Economy
3320	15 RT	2	5/16-18 x 11/16 FBHSCS	Economy
75-3581	20	2	M5 x 8mm BHSCS	Economy
75-3404	25	2	M6 x 10mm BHSCS	Economy
75-3615	30	2	M8 x 12mm BHSCS	Roll-in
75-3422	40	2	M8 x 16mm BHSCS	Economy
75-3619	45	2	M8 x 18mm BHSCS	Drop-in

Suggested Hardware (Mount to Backing Plate)

Part No.	Series	Qty.	Bolt
3063	10	2	1/4-20 x 1/2 BHSCS
3114	15 RT	2	5/16-18 x 3/4 BHSCS
11-5310	20	2	M5 x 10mm BHSCS
13-6312	25	2	M6 x 12mm BHSCS
11-8316	30	2	M8 x 16mm BHSCS
13-8320	40	2	M8 x 20mm BHSCS
11-8318	45	2	M8 x 18mm BHSCS

Suggested Hardware (Mount to Ready Tube)

Part No.	Series	Qty.	Bolt Assembly
3960	RT	2	5/16-18 x 2.00" Flange Hex Head Bolt & Flange Hex Nut

Panels & Doors

Double Arm Narrow Mesh Retainer with Narrow Backing Plates

- Consists of one single arm narrow mesh retainer (pg. 4-50) and two narrow backing plates (pg. 4-52)

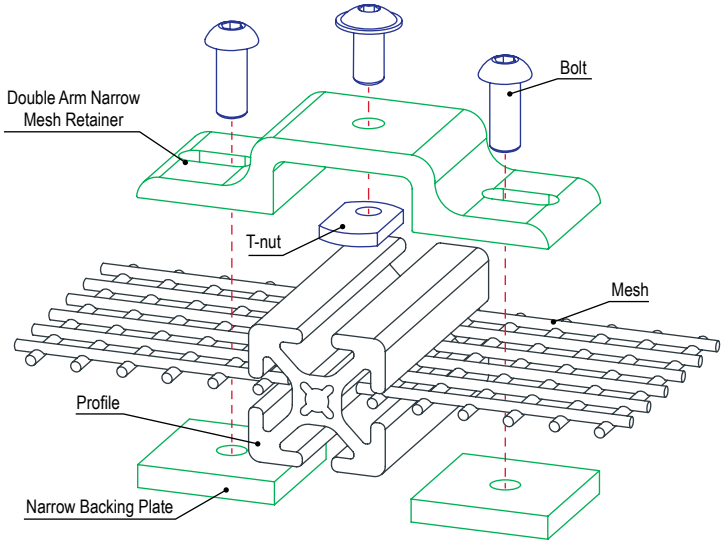

Part No.	Series	Material	Alloy	Process	Finish	Weight
2522	10	Aluminum	6005A – T61	Milled	Clear Anodize	.077 lb
2522-Black	10				Black Anodize	.077 lb
2518	15 RT				Clear Anodize	.240 lb
2518-Black	15 RT				Black Anodize	.240lb
25-2522	25				Clear Anodize	.0448 kg
25-2522-Black	25				Black Anodize	.0448 kg
40-2518	40				Clear Anodize	.1398 kg
40-2518-Black	40				Black Anodize	.1398 kg

Suggested Hardware (Mount to T-Slot)

Part No.	Series	Qty.	Bolt	T-Nut
3321	10	1	1/4-20 x 1/2 FBHSCS	Economy
3320	15	1	5/16-18 x 11/16 FBHSCS	Economy
75-3404	25	1	M6 x 10mm BHSCS	Economy
75-3422	40	1	M8 x 16mm BHSCS	Economy

Suggested Hardware (Mount to Backing Plate)

Part No.	Series	Qty.	Bolt
3063	10	2	1/4-20 x 1/2 BHSCS
3114	15 RT	2	5/16-18 x 3/4 BHSCS
13-6312	25	2	M6 x 12mm BHSCS
13-8320	40	2	M8 x 20mm BHSCS

Suggested Hardware (Mount to Ready Tube)

Part No.	Series	Qty.	Bolt Assembly
3960	RT	1	5/16-18 x 2.00" Flange Hex Head Bolt & Flange Hex Nut

80/20 BUILD YOUR IDEA
More on 80/20® products available at 8020.net

Double Arm Wide Mesh Retainer with Wide Backing Plates

- Consists of one double arm wide mesh retainer (pg. 4-51) and two wide backing plate (pg. 4-53)

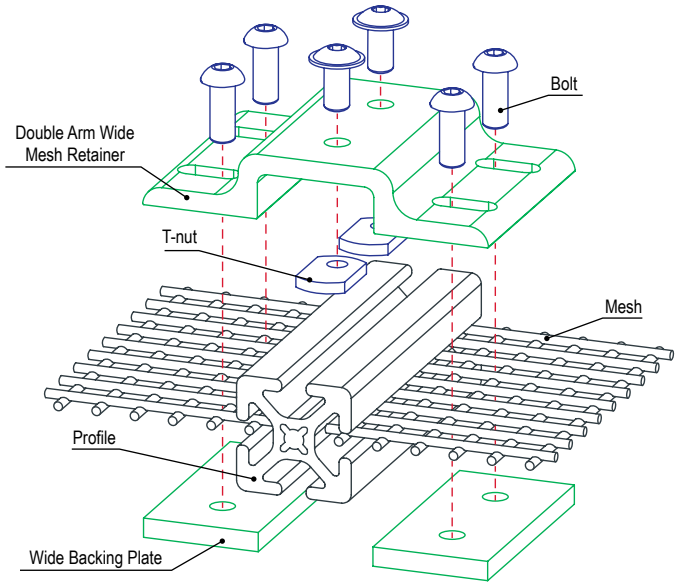

Part No.	Series	Material	Alloy	Process	Finish	Weight
2524	10	Aluminum	6005A – T61	Milled	Clear Anodize	.157 lb
2524-Black	10				Black Anodize	.157 lb
2520	15 RT				Clear Anodize	.482 lb
2520-Black	15 RT				Black Anodize	.482 lb
25-2524	25				Clear Anodize	.1157 kg
25-2524-Black	25				Black Anodize	.1157 kg
40-2520	40				Clear Anodize	.2807 kg
40-2520-Black	40				Black Anodize	.2807 kg

Suggested Hardware (Mount to T-Slot)

Part No.	Series	Qty.	Bolt	T-Nut
3321	10	2	1/4-20 x 1/2 FBHSCS	Economy
3320	15	2	5/16-18 x 11/16 FBHSCS	Economy
75-3404	25	2	M6 x 10mm BHSCS	Economy
75-3422	40	2	M8 x 16mm BHSCS	Economy

Suggested Hardware (Mount to Backing Plate)

Part No.	Series	Qty.	Bolt
3063	10	4	1/4-20 x 1/2 BHSCS
3114	15 RT	4	5/16-18 x 3/4 BHSCS
13-6312	25	4	M6 x 12mm BHSCS
13-8320	40	4	M8 x 20mm BHSCS

Suggested Hardware (Mount to Ready Tube)

Part No.	Series	Qty.	Bolt Assembly
3960	RT	2	5/16-18 x 2.00" Flange Hex Head Bolt & Flange Hex Nut

Panels & Doors

Tabletop Fastening Kit

- Used to help secure a tabletop to a frame
- Includes all required hardware

2810

2811

Part No.	Series	Bracket	Bolt	Nut	Washer	Screw	Weight
2810 2810-Black	15	Slotted Inside Corner Bracket	5/16-18 x 11/16 FBHSCS	5/16-18 Roll-In T-Nut	5/16 Bright Zinc Washer	#14 x 1.25 Phillips Pan Head Sheet Metal Screw	.139 lb
65-2810	40		M8 x 16mm BHSCS	M8 Roll-In T-Nut	M8 Bright Zinc Washer		.144 lb
2811 2811-Black	RT		5/16-18 x 2.0 BHSCS	5/16-18 Flanged Hex Nut	5/16 Bright Zinc Washer		.152 lb

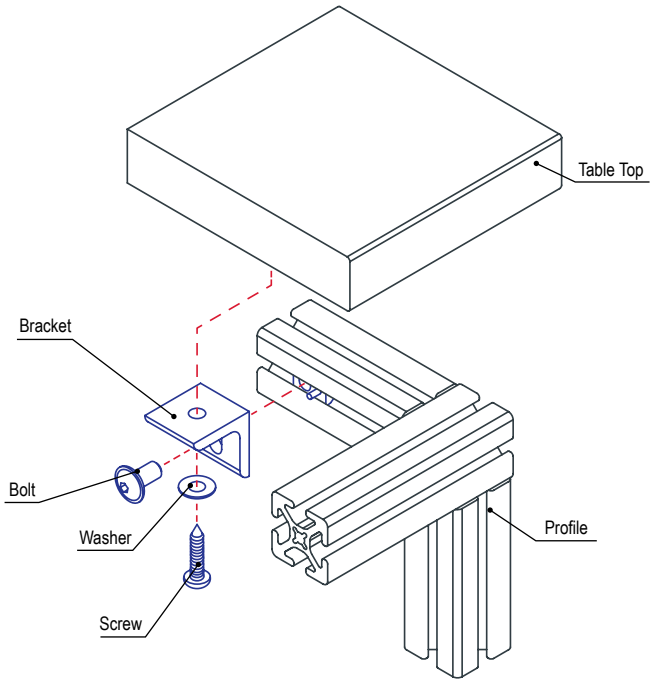

80/20 BUILD YOUR IDEA
More on 80/20® products available at 8020.net

Roll-in Mesh Panel Retainer

- Used to mount mesh panel when recessed within the T-slot
- Self-threading screw is included; requires no machining

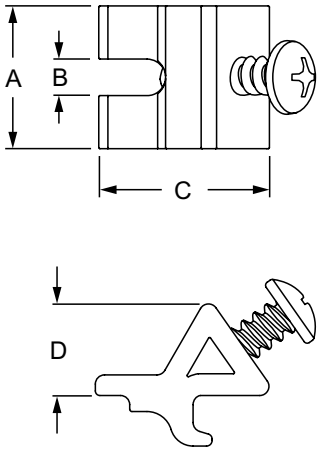

Part No.	Series	Material	Process	Color	A	B	C	D	E	Weight
2442	15 40	Nylon PA Glass Fiber Reinforced	Molded	Black	.625"	.150"	.758"	.400"	No. 2 Phillips	.006 lb

1

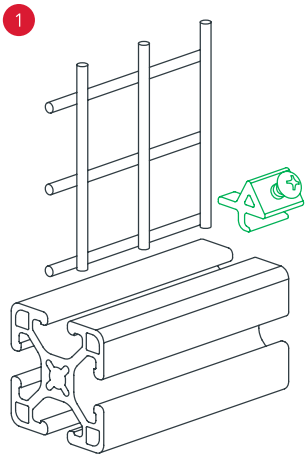

2

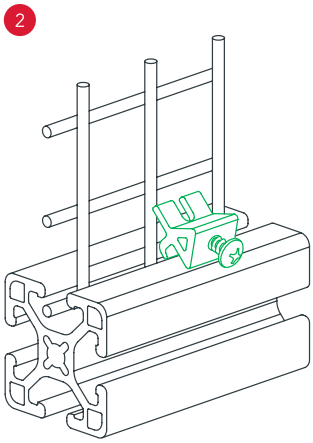

3

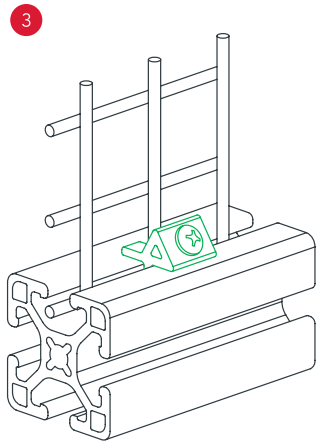

Panels & Doors

Straddle Mesh Retainer

- Used with Quick Frame® profiles to secure 1.00” x 1.00” mesh panels
- Hardware not included

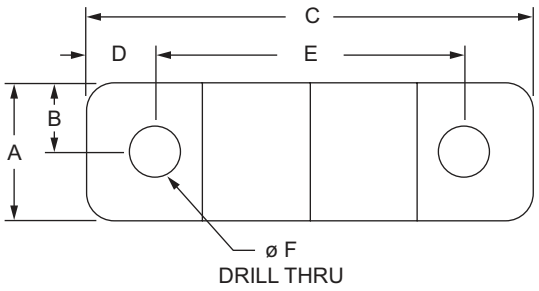

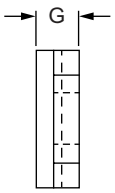

Part No.	Series	Material	Process	Finish	A	B	C	D	E	F	G	Weight
9300	QF	Aluminum	Machined	Mill Finish	.500”	.250”	1.750”	.313”	1.125”	.188”	.156”	.007 lb
9310	QF	Plastic	Molded	Matte Gray	.500”	.250”	1.625”	.250”	1.125”	.188”	.156”	.002 lb

Suggested Hardware (Mount to QF Profile)

Part No.	Series	Qty.	Bolt
9301	QF	2	#8 x 5/8” Self Tapping Screw
9302	QF	2	#8 x .675” Self Drilling Screw

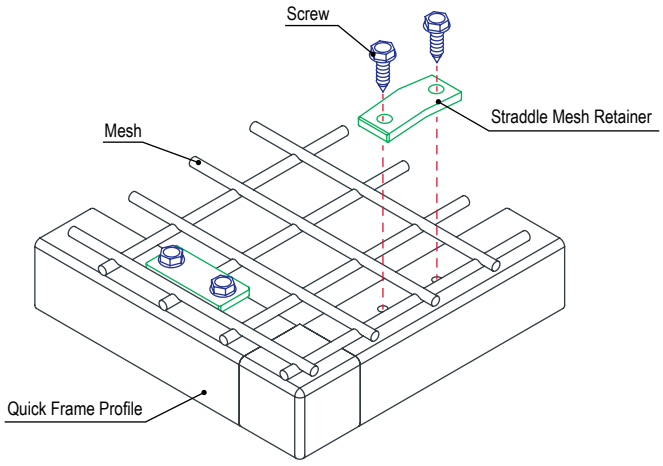

80/20 BUILD YOUR IDEA
More on 80/20® products available at 8020.net

Wire Mesh Fastener

- Used with Quick Frame® profiles to secure .500” x .500” mesh panels
- Hardware not included

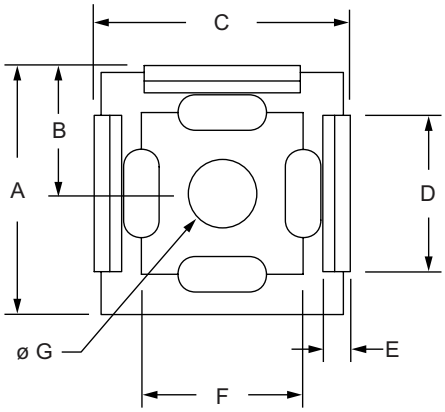

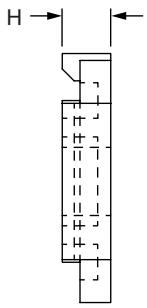

Part No.	Series	A	B	C	D	E	F	G	H	Weight
9305	QF	.632”	.325”	.649”	.396”	.070”	.410”	.172”	.123”	.001 lb

Material Specifications

Material	Process	Finish	Color
Nylon	Molded	Matte	Gray

Suggested Hardware (Mount to QF Profile)

Part No.	Series	Qty.	Bolt
9301	QF	1	#8 x 5/8” Self Tapping Screw
9302	QF	1	#8 x 5/8” Self Drilling Screw

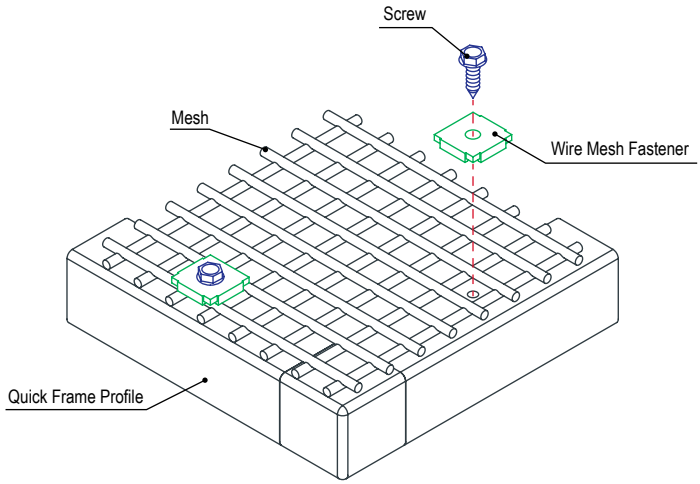

Panels & Doors

Economy Sliding Door Glide

- Helps profiles glide along T-slot; attaches to profile end and freely rotates as door pivots
- Requires no lubrication; stainless steel mounting screw is included

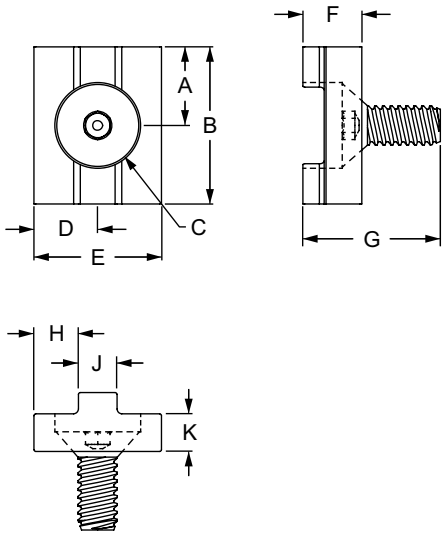

Part No.	Series	Pad Color	A	B	C	D	E	F	G	H	J	K	Weight
2067	10	Natural	.500"	1.000"	1/4-20 x .625	.406"	.812"	.375"	.875"	.246"	.283"	.240"	.009 lb
2068	15		.750"	1.500"	5/16-18 x .625	.625"	1.25"	.375"	.875"	.312"	.469"	.240"	.016 lb
25-2067	25	Black	12.50mm	25.00mm	M6-1.0 x 16mm	10.31mm	20.62mm	9.50mm	19.67mm	6.22mm	7.20mm	6.10mm	.0066 kg
40-2068	40		20.00mm	40.00mm	M8-1.25 x 16mm	15.88mm	31.75mm	9.53mm	22.35mm	11.91mm	7.92mm	6.10mm	.0142 kg

Material Specifications

Material	Grade	Process
UHMW	Virgin	Extruded

Required Machining Services

Machining Type	Machined	Reference Page
End Tap	Mounting Profile	10-3

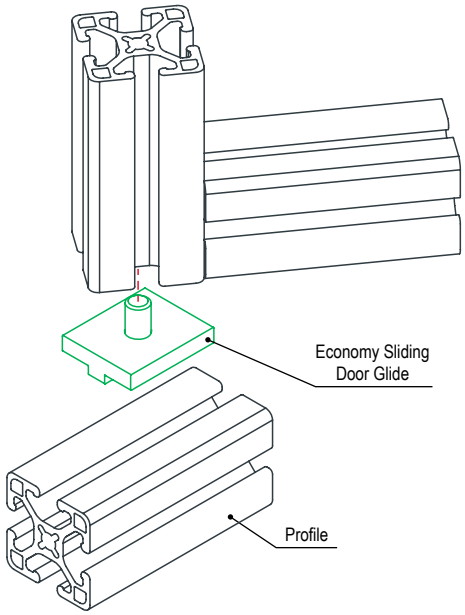

80/20 BUILD YOUR IDEA
More on 80/20® products available at 8020.net

Standard Sliding Door Glide

- Used to create a top rail sliding or bi-fold door; attaches to profile end and freely rotates as door pivots
- Requires no lubrication; stainless steel mounting screw is included

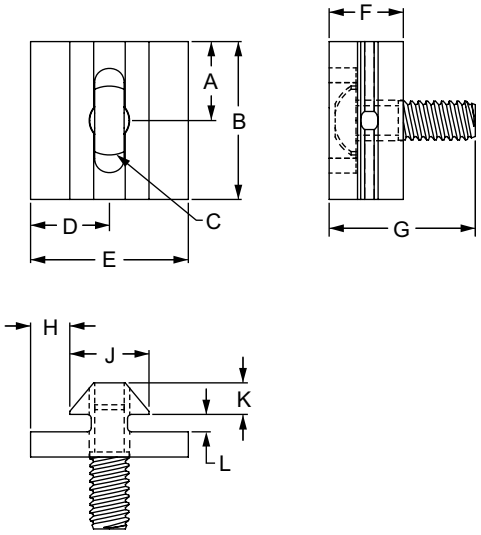

Part No.	Series	A	B	C	D	E	F	G	H	J	K	L	Weight
2059	10	.500"	1.000"	1/4-20	.500"	1.000"	.470"	.920"	.250"	.500"	.200"	.110"	.016 lb
2051	15	.750"	1.500"	5/16-18	.750"	1.500"	.700"	1.710"	.365"	.770"	.265"	.195"	.054 lb
25-2059*	25	12.70mm	25.40mm	1/4-20*	12.70mm	25.40mm	11.94mm	23.37mm	6.35mm	12.70mm	5.08mm	2.79mm	.0075 kg
40-2051**	40	19.05mm	38.10mm	5/16-18**	19.05mm	38.10mm	17.78mm	43.43mm	9.27mm	19.56mm	6.73mm	4.95mm	.0200 kg

* Important: The included 1/4-20 screw requires the corresponding metric end tap.
** Important: The included 5/16-18 screw requires the corresponding metric end tap.

Material Specifications

Material	Grade	Finish	Process
UHMW	Virgin	Natural	Extruded

Required Machining Services

Machining Type	Machined	Reference Page
End Tap	Mounting Profile	10-3

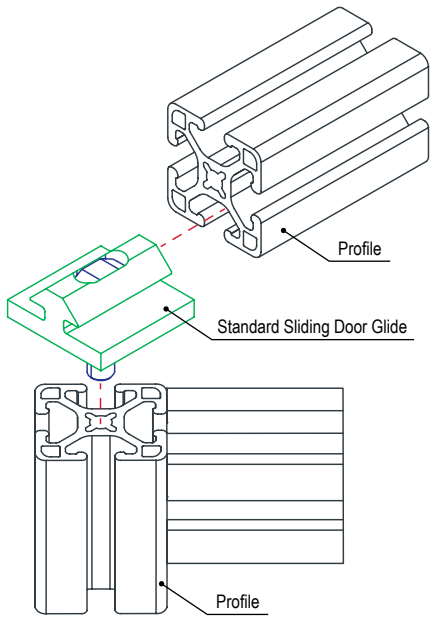

Panels & Doors

Standard Sliding Door Glide Profile

- Used to create a top rail sliding or bi-fold door; attaches to profile end and freely rotates as door pivots
- Requires no lubrication; stainless steel mounting screw is included

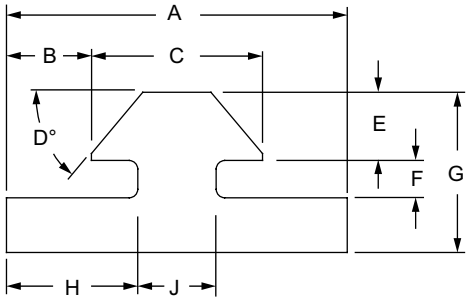

Part No.	Series	A	B	C	D	E	F	G	H	J	Length	Weight
6710	10	1.000"	.250"	.500"	50°	.200"	.110"	.470"	.385"	.230"	per inch	.008 lb / in.
6710-120	10	1.000"	.250"	.500"	50°	.200"	.110"	.470"	.385"	.230"	120.00"	1.020 lb
6710-145	10	1.000"	.250"	.500"	50°	.200"	.110"	.470"	.385"	.230"	145.00"	1.232 lb
6808	15	1.500"	.365"	.770"	45°	.265"	.195"	.700"	.600"	.300"	per inch	.018 lb / in.
6808-145	15	1.500"	.365"	.770"	45°	.265"	.195"	.700"	.600"	.300"	145.00"	2.711 lb
25-6710	25	25.40mm	6.35mm	12.70mm	50°	5.08mm	2.79mm	11.94mm	9.78mm	5.84mm	per millimeter	.0038 kg / mm
40-6808	40	38.10mm	9.27mm	19.56mm	45°	6.73mm	4.95mm	17.78mm	15.24mm	7.62mm	per millimeter	.0084 kg / mm
40-6808-3.683M	40	38.10mm	9.27mm	19.56mm	45°	6.73mm	4.95mm	17.78mm	15.24mm	7.62mm	3683.00mm	1.1698 kg

Material Specifications

Material	Grade	Finish	Process
UHMW	Virgin	Natural	Extruded

Required Machining Services

Machining Type	Machined	Reference Page
Cut to Length	Door Glide Profile	10-2

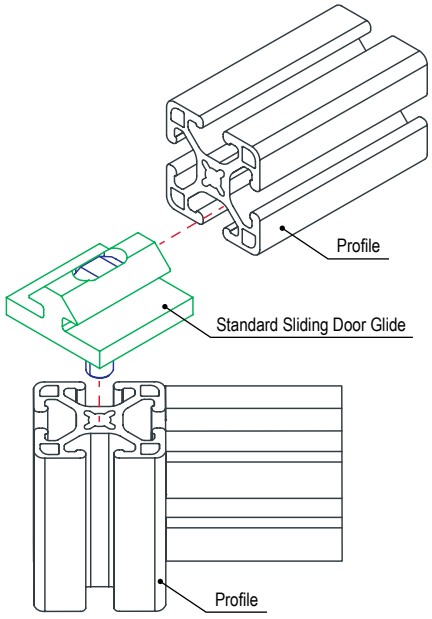

80/20 BUILD YOUR IDEA
More on 80/20® products available at 8020.net

Upper & Lower Door Slide Track

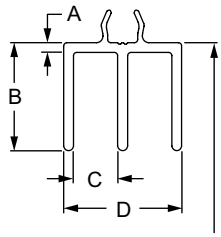

2211

For panel height subtract .500" from overall height

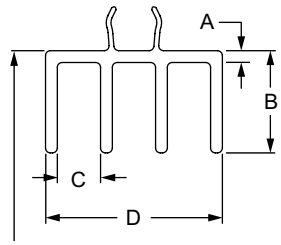

2210

For panel height subtract .500" from overall height

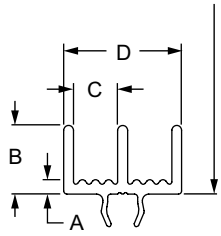

2221

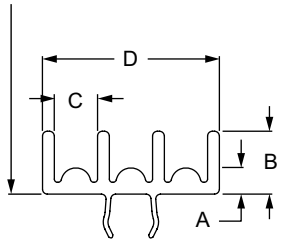

2220

Part No.	Series	Slide Track	Material	Alloy	Process	Finish	A	B	C	D	Length	Weight
2211	10	Upper Door	Aluminum	6005A – T61	Extruded	Clear Anodize	.062"	.688"	.281"	.750"	per inch	.016 lb / in.
2211-48	10					Clear Anodize	.062"	.688"	.281"	.750"	48.000"	.778 lb
2211-120	10					Clear Anodize	.062"	.688"	.281"	.750"	120.000"	2.351 lb
2211-Black	10					Black Anodize	.062"	.688"	.281"	.750"	per inch	.016 lb / in.
2210	15					Clear Anodize	.075"	.650"	.275"	1.125"	per inch	.025 lb / in.
2210-48	15					Clear Anodize	.075"	.650"	.275"	1.125"	48.000"	1.217 lb
2210-120	15					Clear Anodize	.075"	.650"	.275"	1.125"	120.000"	3.677 lb
2210-Black	15					Black Anodize	.075"	.650"	.275"	1.125"	per inch	.025 lb / in.
25-2211	25					Clear Anodize	1.57mm	17.48mm	7.14mm	19.05mm	per millimeter	.0073 kg / mm
25-2211-3.048M	25					Clear Anodize	1.57mm	17.48mm	7.14mm	19.05mm	3.048M	1.0663 kg
25-2211-Black	25					Black Anodize	1.57mm	17.48mm	7.14mm	19.05mm	per millimeter	.0073 kg / mm
40-2210	40					Clear Anodize	1.91mm	16.51mm	6.99mm	28.58mm	per millimeter	.0115 kg / mm
40-2210-3.048M	40					Clear Anodize	1.91mm	16.51mm	6.99mm	28.58mm	3.048M	1.6678 kg
40-2210-Black	40					Black Anodize	1.91mm	16.51mm	6.99mm	28.58mm	per millimeter	.0115 kg / mm
2221	10	Lower Door				Clear Anodize	.092"	.438"	.281"	.750"	per inch	.012 lb / in.
2221-48	10					Clear Anodize	.092"	.438"	.281"	.750"	48.000"	.607 lb
2221-120	10					Clear Anodize	.092"	.438"	.281"	.750"	120.000"	1.833 lb
2221-Black	10					Black Anodize	.092"	.438"	.281"	.750"	per inch	.012 lb / in.
2220	15					Clear Anodize	.169"	.400"	.275"	1.125"	per inch	.022 lb / in.
2220-48	15					Clear Anodize	.169"	.400"	.275"	1.125"	48.000"	1.083 lb
2220-120	15					Clear Anodize	.169"	.400"	.275"	1.125"	120.000"	3.273 lb.
2220-Black	15					Black Anodize	.169"	.400"	.275"	1.125"	per inch	.0226 lb / in.
25-2221	25					Clear Anodize	2.34mm	11.13mm	7.14mm	19.05mm	per millimeter	.0057 kg / mm
25-2221-3.048M	25					Clear Anodize	2.34mm	11.13mm	7.14mm	19.05mm	3.048M	.8314 kg
25-2221-Black	25					Black Anodize	2.34mm	11.13mm	7.14mm	19.05mm	per millimeter	.0057 kg / mm
40-2220	40					Clear Anodize	4.29mm	10.16mm	6.99mm	28.58mm	per millimeter	.3969 kg / mm
40-2220-3.048M	40					Clear Anodize	4.29mm	10.16mm	6.99mm	28.58mm	3.048M	1.4846 kg
40-2220-Black	40					Black Anodize	4.29mm	10.16mm	6.99mm	28.58mm	per millimeter	.3969 kg / mm

Required Machining Services

Machining Type	Machined	Reference Page
Cut to Length	Door Track Profile	10-2

Panels & Doors

Roller Wheel with Ball Bearing Hub

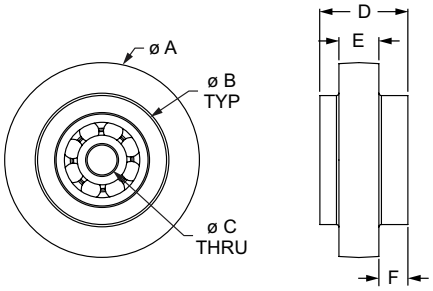

Part No.	Series	Material	Grade	Color	Process	A	B	C	D	E	F	Weight
12017	15 40	Nylon PA Glass Fiber Reinforced	PA6GK20	Black	Injection Molding	39.00mm	25.80mm	6.00mm	17.60mm	8.00mm	5.80mm	.0292 kg
12018	15 40					39.00mm	25.80mm	6.00mm	17.60mm	10.00mm	3.80mm	.0302 kg
12020	15 40					47.00mm	33.60mm	8.00mm	19.40mm	7.80mm	5.80mm	.0462 kg
12021	45					48.00mm	33.60mm	8.00mm	19.50mm	9.90mm	4.80mm	.0498 kg

Roller Wheel with Steel Hub

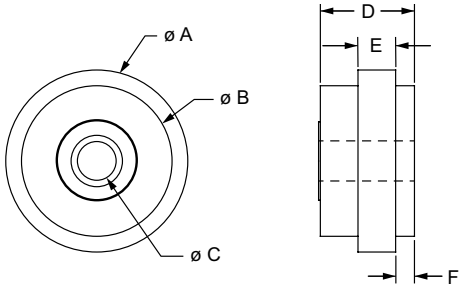

Part No.	Series	Material	Grade	Color	Process	A	B	C	D	E	F	Weight
12024	10 25	Nylon PA Glass Fiber Reinforced	PA6GK20	Black	Injection Molding	29.00mm	24.00mm	6.20mm	15.00mm	6.00mm	3.00mm	.036 lb

Reinforced Roller Wheel

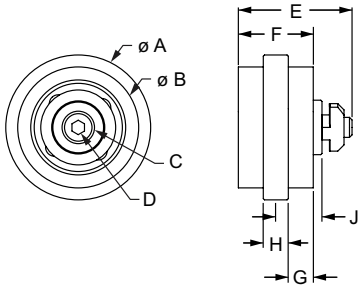

Part No.	Series	Material	Grade	Color	Process	A	B	C	D	E	F	G	H	J	Weight
12022	45	Nylon PA Glass Fiber Reinforced	PA6GK20	Black	Injection Molding	58.00mm	48.40mm	M8 x 45.00mm	M6	45.50mm	30.00mm	9.50mm	10.00mm	18.50mm	.1543 kg

80/20 BUILD YOUR IDEA
More on 80/20® products available at 8020.net

Roller Wheel with Permanent Lubricated Bushing

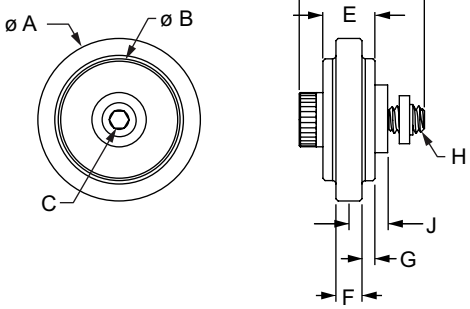

Fractional Metric

Part No.	Series	Material	Grade	Color	Process	A	B	C	D	E	F	G	H	J	Weight
2281	10 to 10	Nylon PA Glass Fiber Reinforced	K222-D	Black	Injection Molding	1.500"	1.125"	5/32	1.156"	.480"	.240"	.120"	1/4-20	.365"	.067 lb
2282	10 to 15					1.500"	1.125"	5/32	1.156"	.480"	.310"	.085"	1/4-20	.365"	.070 lb
2290	15 to 15					2.000"	1.625"	3/16	1.500"	.720"	.312"	.204"	5/16-18	.485"	.158 lb
25-2281	25 to 25			Blue		37.50mm	28.00mm	4.00mm	28.41mm	11.60mm	6.10mm	2.74mm	M6 x 1.0	8.97mm	.0318 kg
65-2282	25 to 40					37.50mm	28.00mm	4.00mm	28.41mm	11.60mm	7.90Mm	1.85mm	M6 x 1.0	8.97mm	.0621 kg
40-2290	40 to 40					54.00mm	43.00mm	5.00mm	40.25mm	19.50mm	7.90mm	5.80mm	M8 x 1.25	12.92mm	.0849 kg

Roller Wheel with Dual Roller Bearing

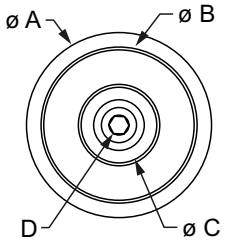

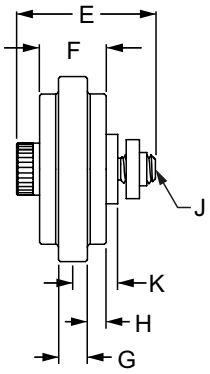

Fractional Metric

Part No.	Series	A	B	C	D	E	F	G	H	J	K	Weight
2280	15 to 15	2.000"	1.625"	.875"	3/16	1.495"	.720"	.312"	.204"	5/16-18	.485"	.181 lb
40-2280	40 to 40	54.00mm	43.00mm	26.00mm	5mm	40.25mm	19.48mm	7.90mm	5.79mm	M8 x 1.25	13.43mm	.1041 kg

Material Specifications

Part No.	Material	Grade	Color	Process
2280	Nylon PA Glass Fiber Reinforced	K222-D	Black	Injection Molding
40-2280			Blue	

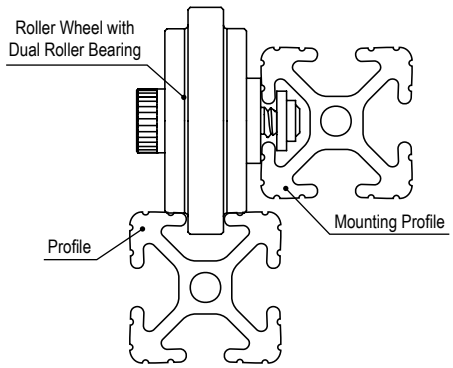

Panels & Doors

Dual Roller Wheel Bracket

- Used with roller wheels to form assemblies that create door frames, linear glides, and track systems
- Mounting hardware included

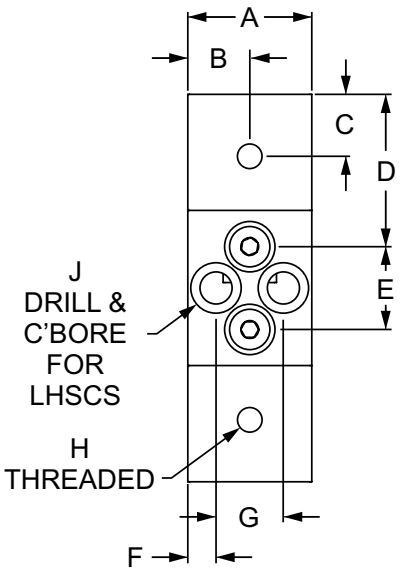

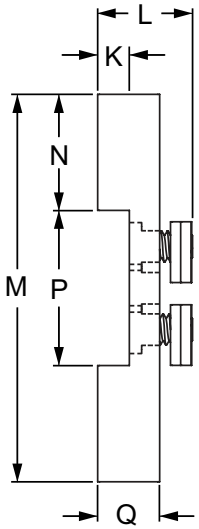

Part No.	Series	A	B	C	D	E	F	G	H	J	K	L	M	N	P	Q
2750	10	1.000"	.500"	.500"	1.228"	.669"	.228"	.544"	1/4-20	1/4-20	.255"	.765"	3.125"	.938"	1.250"	.500"
2750-Black	10	1.000"	.500"	.500"	1.228"	.669"	.228"	.544"	1/4-20	1/4-20	.255"	.765"	3.125"	.938"	1.250"	.500"
2752	10	1.000"	.500"	.500"	1.563"	1.000"	.228"	.544"	1/4-20	1/4-20	.255"	.765"	4.125"	.938"	2.250"	.500"
2752-Black	10	1.000"	.500"	.500"	1.563"	1.000"	.228"	.544"	1/4-20	1/4-20	.255"	.765"	4.125"	.938"	2.250"	.500"
2754	15	1.500"	.750"	.750"	1.883"	.860"	.383"	.735"	5/16-18	5/16-18	.390"	1.181"	4.625"	1.438"	1.750"	.750"
2754-Black	15	1.500"	.750"	.750"	1.883"	.860"	.383"	.735"	5/16-18	5/16-18	.390"	1.181"	4.625"	1.438"	1.750"	.750"
2757	15	1.500"	.750"	.750"	2.313"	1.500"	.382"	.735"	5/16-18	5/16-18	.390"	1.181"	6.125"	1.438"	3.250"	.750"
2757-Black	15	1.500"	.750"	.750"	2.313"	1.500"	.382"	.735"	5/16-18	5/16-18	.390"	1.181"	6.125"	1.438"	3.250"	.750"
25-2750	25	25.40mm	12.70mm	12.70mm	47.50mm	17.00mm	5.81mm	13.81mm	M6 x 1.0	M6 x 1.0	6.40mm	20.42mm	78.00mm	23.44mm	31.10mm	12.70mm
25-2750-Black	25	25.40mm	12.70mm	12.70mm	47.50mm	17.00mm	5.81mm	13.81mm	M6 x 1.0	M6 x 1.0	6.40mm	20.42mm	78.00mm	23.44mm	31.10mm	12.70mm
25-2752	25	25.40mm	12.70mm	12.70mm	38.80mm	25.40mm	5.81mm	13.81mm	M6 x 1.0	M6 x 1.0	6.40mm	20.42mm	103.00mm	23.44mm	56.10mm	12.70mm
25-2752-Black	25	25.40mm	12.70mm	12.70mm	38.80mm	25.40mm	5.81mm	13.81mm	M6 x 1.0	M6 x 1.0	6.40mm	20.42mm	103.00mm	23.44mm	56.10mm	12.70mm
40-2754	40	40.00mm	20.00mm	20.00mm	49.65mm	24.00mm	10.00mm	20.00mm	M8 x 1.25	M8 x 1.25	10.20mm	25.20mm	123.30mm	38.30mm	46.70mm	19.00mm
40-2754-Black	40	40.00mm	20.00mm	20.00mm	49.65mm	24.00mm	10.00mm	20.00mm	M8 x 1.25	M8 x 1.25	10.20mm	25.20mm	123.30mm	38.30mm	46.70mm	19.00mm
40-2757	40	40.00mm	20.00mm	20.00mm	61.65mm	40.00mm	10.00mm	20.00mm	M8 x 1.25	M8 x 1.25	10.20mm	31.20mm	163.30mm	38.30mm	86.70mm	19.00mm
40-2757-Black	40	40.00mm	20.00mm	20.00mm	61.65mm	40.00mm	10.00mm	20.00mm	M8 x 1.25	M8 x 1.25	10.20mm	31.20mm	163.30mm	38.30mm	86.70mm	19.00mm

Material Specifications	2750	2750-Black	2752	2752-Black	2754	2754-Black	2757	2757-Black	25-2750	25-2750-Black	25-2752	25-2752-Black	40-2754	40-2754-Black	40-2757	40-2757-Black
Weight	.138 lb		.162 lb		.458 lb		.534 lb		.0615 kg		.0715 kg		.2218 kg		.2608 kg	
Color	Clear	Black	Clear	Black	Clear	Black	Clear	Black	Clear	Black	Clear	Black	Clear	Black	Clear	Black
Material	Aluminum															
Alloy	6005A – T61															
Finish	Anodize															
Process	Milled															

80/20 BUILD YOUR IDEA
More on 80/20® products available at 8020.net

Dual Roller Wheel Bracket Assembly

- Used to create door frames, linear glides, and track systems
- Mounting hardware included

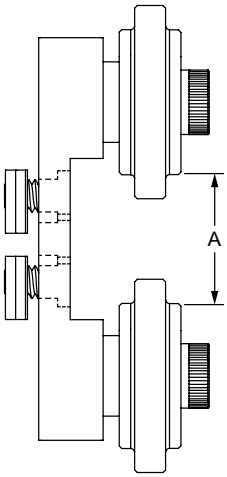

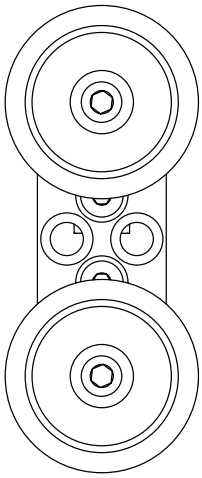

Fractional

Metric

		Assembly Components		Included Hardware							
Part No.	Series	Bracket (Qty)	Wheel (Qty)	Bolt (Qty)	T-Nut (Qty)	Material	Process	Wheel Color	Bracket Color	A	Weight
2751	10	2750 (1)	2281 (2)	275001 (2)	3204 (2)	Nylon PA Glass Fiber Reinforced K222-D	Injection Molding	Black	Clear Anodize	1.000"	.253 lb
2751-Black	10	2750 (1)	2281 (2)						Black Anodize	1.000"	.253 lb
2753	10	2752 (1)	2281 (2)						Clear Anodize	2.000"	.277 lb
2753-Black	10	2752 (1)	2281 (2)						Black Anodize	2.000"	.277 lb
2755	15	2754 (1)	2280 (2)	275401 (2)	3203 (2)				Clear Anodize	1.500"	.777 lb
2755-Black	15	2754 (1)	2280 (2)						Black Anodize	1.500"	.777 lb
2758	15	2757 (1)	2280 (2)						Clear Anodize	3.000"	.855 lb
2758-Black	15	2757 (1)	2280 (2)						Black Anodize	3.000"	.855 lb
2756	15	2754 (1)	2290 (2)						Clear Anodize	1.500"	.735 lb
2756-Black	15	2754 (1)	2290 (2)						Black Anodize	1.500"	.735 lb
2759	15	2757 (1)	2290 (2)						Clear Anodize	3.000"	.813 lb
2759-Black	15	2757 (1)	2290 (2)						Black Anodize	3.000"	.813 lb
25-2751	25	25-2750 (1)	25-2281 (2)	13-1993 (2)	3873 (2)			Blue	Clear Anodize	25.00mm	.1107 kg
25-2751-Black	25	25-2750 (1)	25-2281 (2)						Black Anodize	25.00mm	.1107 kg
25-2753	25	25-2752 (1)	25-2281 (2)						Clear Anodize	50.00mm	.1274 kg
25-2753-Black	25	25-2752 (1)	25-2281 (2)						Black Anodize	50.00mm	.1274 kg
40-2755	40	40-2754 (1)	40-2280 (2)	13-1957 (2)	3868 (2)				Clear Anodize	40.00mm	.4129 kg
40-2755-Black	40	40-2754 (1)	40-2280 (2)						Black Anodize	40.00mm	.4129 kg
40-2758	40	40-2757 (1)	40-2280 (2)						Clear Anodize	80.00mm	.4519 kg
40-2758-Black	40	40-2757 (1)	40-2280 (2)						Black Anodize	80.00mm	.4519 kg
40-2756	40	40-2754 (1)	40-2290 (2)						Clear Anodize	40.00mm	.3747 kg
40-2756-Black	40	40-2754 (1)	40-2290 (2)						Black Anodize	40.00mm	.3747 kg
40-2759	40	40-2757 (1)	40-2290 (2)						Clear Anodize	80.00mm	.4122 kg
40-2759-Black	40	40-2757 (1)	40-2290 (2)						Black Anodize	80.00mm	.4122 kg

Panels & Doors

Standard Lift-Off Hinge - Right Hand with Single Long Pin

- Used to create lift-off hinge assemblies (pg. 4-76)
- Mounting hardware included

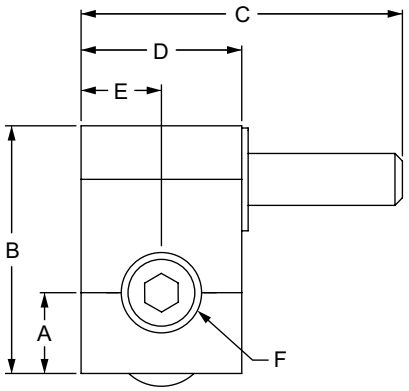

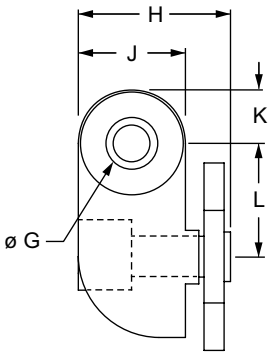

Part No.	Series	A	B	C	D	E	F	G	H	J	K	L	Weight
2073	10	.377"	1.156"	1.500"	.750"	.375"	10-32	.242"	.750"	.500"	.250"	.529"	.060 lb
2073-Black	10	.377"	1.156"	1.500"	.750"	.375"	10-32	.242"	.750"	.500"	.250"	.529"	.060 lb
2093	15	.625"	1.655"	1.500"	.750"	.375"	1/4-20	.242"	.875"	.500"	.250"	.780"	.086 lb
2093-Black	15	.625"	1.655"	1.500"	.750"	.375"	1/4-20	.242"	.875"	.500"	.250"	.780"	.086 lb
25-2073	25	9.40mm	29.00mm	38.05mm	19.05mm	9.53mm	M5 x 0.8	6.15mm	18.90mm	13.00mm	6.20mm	13.40mm	.0262 kg
25-2073-Black	25	9.40mm	29.00mm	38.05mm	19.05mm	9.53mm	M5 x 0.8	6.15mm	18.90mm	13.00mm	6.20mm	13.40mm	.0262 kg
40-2093	40	16.85mm	43.60mm	38.05mm	19.05mm	9.53mm	M6 x 1.0	6.15mm	18.90mm	13.00mm	6.12mm	20.70mm	.0436 kg
40-2093-Black	40	16.85mm	43.60mm	38.05mm	19.05mm	9.53mm	M6 x 1.0	6.15mm	18.90mm	13.00mm	6.12mm	20.70mm	.0436 kg

*The gap distance between the two mating profiles is .063" (1.60mm)

Material Specifications

Part No.	Material	Alloy	Process	Finish
2073	Aluminum	6005A – T61	Milled	Clear Anodize
2073-Black				Black Anodize
2093				Clear Anodize
2093-Black				Black Anodize
25-2073				Clear Anodize
25-2073-Black				Black Anodize
40-2093				Clear Anodize
40-2093-Black				Black Anodize

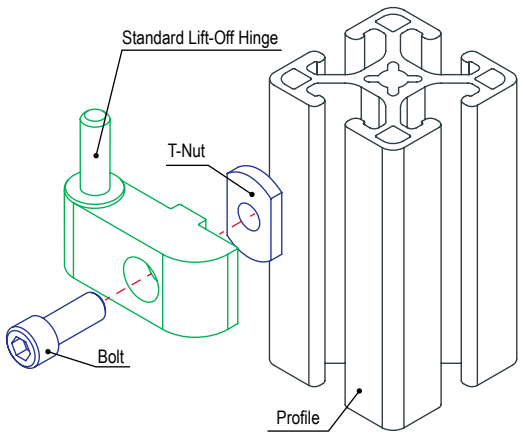

Included Hardware (Mount to T-Slot)

Series	Part No.	Qty.	Bolt	Part No.	Qty.	T-Nut
10	3048	1	10-32 x 1/2" SHCS (Black)	3276	1	Economy
15	3067	1	1/4-20 x 5/8" SHCS (Black)	3286	1	Economy
25	13-5512	1	M5 x 12mm SHCS (Blue)	25-1951	1	Economy
40	13-6516	1	M6 x 16mm SHCS (Blue)	3836	1	Economy

80/20 BUILD YOUR IDEA
More on 80/20® products available at 8020.net

Standard Lift-Off Hinge - Right Hand with Single Short Pin

- Used to create captivated assemblies (pg. 4-76)
- Mounting hardware included

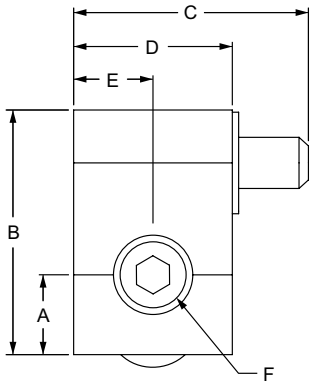

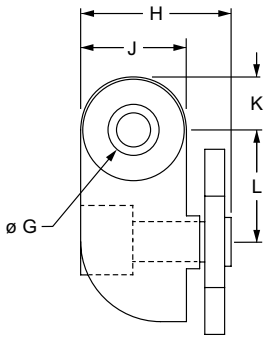

Part No.	Series	A	B	C	D	E	F	G	H	J	K	L	Weight
2075	10	.377"	1.156"	1.110"	.750"	.375"	10-32	.242"	.750"	.500"	.250"	.529"	.055 lb
2075-Black	10	.377"	1.156"	1.110"	.750"	.375"	10-32	.242"	.750"	.500"	.250"	.529"	.055 lb
2095	15	.625"	1.655"	1.110"	.750"	.375"	1/4-20	.242"	.875"	.500"	.250"	.780"	.082 lb
2095-Black	15	.625"	1.655"	1.110"	.750"	.375"	1/4-20	.242"	.875"	.500"	.250"	.780"	.082 lb
25-2075	25	9.40mm	29.00mm	28.15mm	19.05mm	9.53mm	M5 x 0.8	6.15mm	18.90mm	13.00mm	6.20mm	13.40mm	.0238 kg
25-2075-Black	25	9.40mm	29.00mm	28.15mm	19.05mm	9.53mm	M5 x 0.8	6.15mm	18.90mm	13.00mm	6.20mm	13.40mm	.0238 kg
40-2095	40	16.85mm	43.60mm	28.15mm	19.05mm	9.53mm	M6 x 1.0	6.15mm	18.90mm	13.00mm	6.12mm	20.70mm	.0415 kg
40-2095-Black	40	16.85mm	43.60mm	28.15mm	19.05mm	9.53mm	M6 x 1.0	6.15mm	18.90mm	13.00mm	6.12mm	20.70mm	.0415 kg

*The gap distance between the two mating profiles is .063" (1.60mm)

Material Specifications

Part No.	Material	Alloy	Process	Finish
2075	Aluminum	6005A – T61	Milled	Clear Anodize
2075-Black				Black Anodize
2095				Clear Anodize
2095-Black				Black Anodize
25-2075				Clear Anodize
25-2075-Black				Black Anodize
40-2095				Clear Anodize
40-2095-Black				Black Anodize

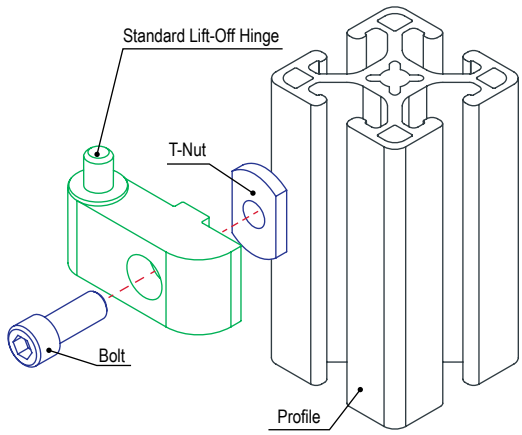

Included Hardware (Mount to T-Slot)

Series	Part No.	Qty.	Bolt	Part No.	Qty.	T-Nut
10	3048	1	10-32 x 1/2" SHCS (Black)	3276	1	Economy
15	3067	1	1/4-20 x 5/8" SHCS (Black)	3286	1	Economy
25	13-5512	1	M5 x 12mm SHCS (Blue)	25-1951	1	Economy
40	13-6516	1	M6 x 16mm SHCS (Blue)	3836	1	Economy

Panels & Doors

Standard Lift-Off Hinge - Left Hand with Single Long Pin

- Used to create lift-off hinge assemblies (pg. 4-76)
- Mounting hardware included

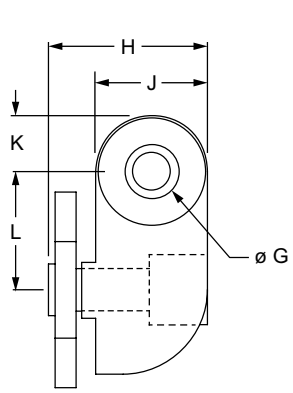

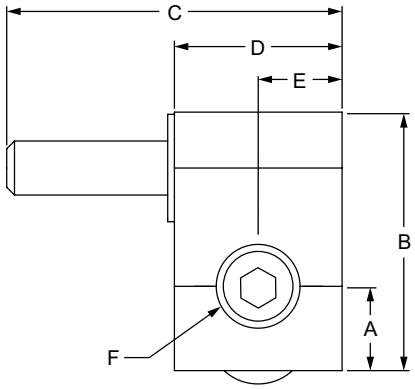

Part No.	Series	A	B	C	D	E	F	G	H	J	K	L	Weight
2074	10	.377"	1.156"	1.500"	.750"	.375"	10-32	.242"	.750"	.500"	.250"	.529"	.060 lb
2074-Black	10	.377"	1.156"	1.500"	.750"	.375"	10-32	.242"	.750"	.500"	.250"	.529"	.060 lb
2094	15	.625"	1.655"	1.500"	.750"	.375"	1/4-20	.242"	.875"	.500"	.250"	.780"	.087 lb
2094-Black	15	.625"	1.655"	1.500"	.750"	.375"	1/4-20	.242"	.875"	.500"	.250"	.780"	.087 lb
25-2074	25	9.40mm	29.00mm	38.05mm	19.05mm	9.53mm	M5 x 0.8	6.15mm	18.90mm	13.00mm	6.20mm	13.40mm	.0267 kg
25-2074-Black	25	9.40mm	29.00mm	38.05mm	19.05mm	9.53mm	M5 x 0.8	6.15mm	18.90mm	13.00mm	6.20mm	13.40mm	.0267 kg
40-2094	40	16.85mm	43.60mm	38.05mm	19.05mm	9.53mm	M6 x 1.0	6.15mm	18.90mm	13.00mm	6.12mm	20.70mm	.0436 kg
40-2094-Black	40	16.85mm	43.60mm	38.05mm	19.05mm	9.53mm	M6 x 1.0	6.15mm	18.90mm	13.00mm	6.12mm	20.70mm	.0436 kg

*The gap distance between the two mating profiles is .063" (1.60mm)

Material Specifications

Part No.	Material	Alloy	Process	Finish
2074	Aluminum	6005A – T61	Milled	Clear Anodize
2074-Black				Black Anodize
2094				Clear Anodize
2094-Black				Black Anodize
25-2074				Clear Anodize
25-2074-Black				Black Anodize
40-2094				Clear Anodize
40-2094-Black				Black Anodize

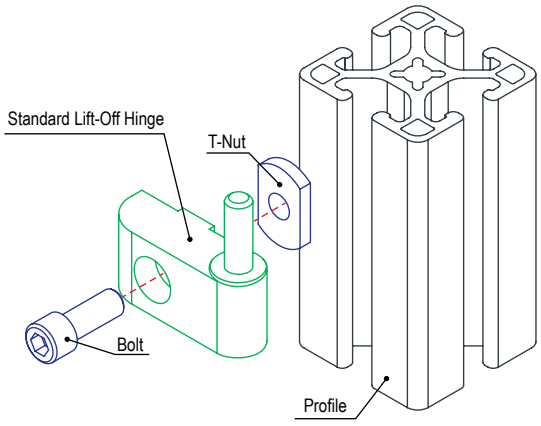

Included Hardware (Mount to T-Slot)

Series	Part No.	Qty.	Bolt	Part No.	Qty.	T-Nut
10	3048	1	10-32 x 1/2" SHCS (Black)	3276	1	Economy
15	3067	1	1/4-20 x 5/8" SHCS (Black)	3286	1	Economy
25	13-5512	1	M5 x 12mm SHCS (Blue)	25-1951	1	Economy
40	13-6516	1	M6 x 16mm SHCS (Blue)	3836	1	Economy

80/20 BUILD YOUR IDEA
More on 80/20® products available at 8020.net

Standard Lift-Off Hinge - Left Hand with Single Short Pin

- Used to create captivated assemblies (pg. 4-76)
- Mounting hardware included

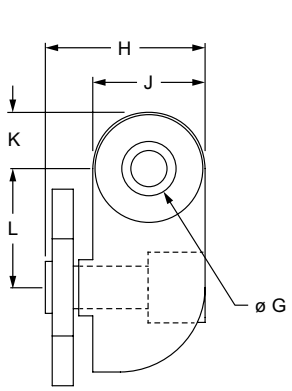

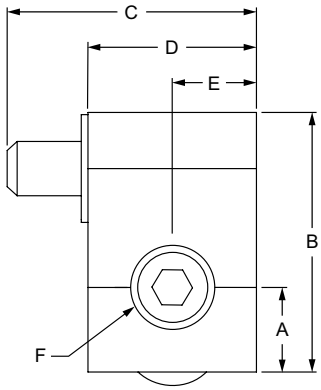

Part No.	Series	A	B	C	D	E	F	G	H	J	K	L	Weight
2076	10	.377"	1.156"	1.110"	.750"	.375"	10-32	.242"	.750"	.500"	.250"	.529"	.055 lb
2076-Black	10	.377"	1.156"	1.110"	.750"	.375"	10-32	.242"	.750"	.500"	.250"	.529"	.055 lb
2096	15	.625"	1.655"	1.110"	.750"	.375"	1/4-20	.242"	.875"	.500"	.250"	.780"	.082 lb
2096-Black	15	.625"	1.655"	1.110"	.750"	.375"	1/4-20	.242"	.875"	.500"	.250"	.780"	.082 lb
25-2076	25	9.40mm	29.00mm	28.15mm	19.05mm	9.53mm	M5 x 0.8	6.15mm	18.90mm	13.00mm	6.20mm	13.40mm	.0241 kg
25-2076-Black	25	9.40mm	29.00mm	28.15mm	19.05mm	9.53mm	M5 x 0.8	6.15mm	18.90mm	13.00mm	6.20mm	13.40mm	.0241 kg
40-2096	40	16.85mm	43.60mm	28.15mm	19.05mm	9.53mm	M6 x 1.0	6.15mm	18.90mm	13.00mm	6.12mm	20.70mm	.0413 kg
40-2096-Black	40	16.85mm	43.60mm	28.15mm	19.05mm	9.53mm	M6 x 1.0	6.15mm	18.90mm	13.00mm	6.12mm	20.70mm	.0413 kg

*The gap distance between the two mating profiles is .063" (1.60mm)

Material Specifications

Part No.	Material	Alloy	Process	Finish
2076	Aluminum	6005A – T61	Milled	Clear Anodize
2076-Black				Black Anodize
2096				Clear Anodize
2096-Black				Black Anodize
25-2076				Clear Anodize
25-2076-Black				Black Anodize
40-2096				Clear Anodize
40-2096-Black				Black Anodize

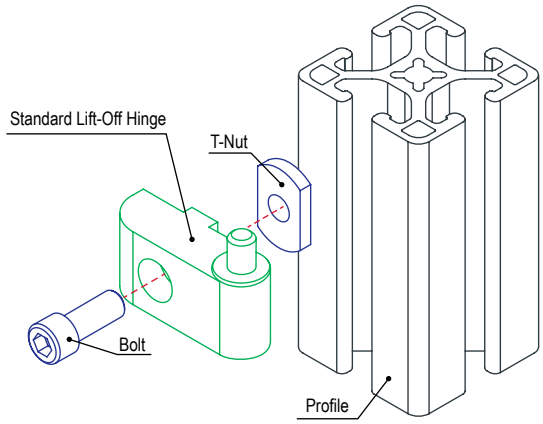

Included Hardware (Mount to T-Slot)

Series	Part No.	Qty.	Bolt	Part No.	Qty.	T-Nut
10	3048	1	10-32 x 1/2" SHCS (Black)	3276	1	Economy
15	3067	1	1/4-20 x 5/8" SHCS (Black)	3286	1	Economy
25	13-5512	1	M5 x 12mm SHCS (Blue)	25-1951	1	Economy
40	13-6516	1	M6 x 16mm SHCS (Blue)	3836	1	Economy

Panels & Doors

Standard Lift-Off Hinge - Mating Hub

- Used with lift-off hinges to create assemblies (pg. 4-76)
- Mounting hardware included

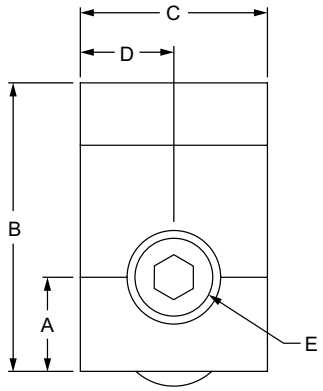

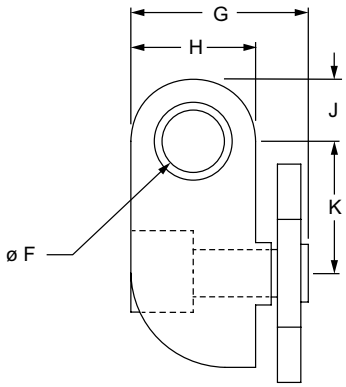

Part No.	Series	A	B	C	D	E	F	G	H	J	K	Weight
2077	10	.377"	1.156"	.750"	.375"	10-32	.250"	.750"	.500"	.250"	.529"	.049 lb
2077-Black	10	.377"	1.156"	.750"	.375"	10-32	.250"	.750"	.500"	.250"	.529"	.049 lb
2097	15	.625"	1.655"	.750"	.375"	1/4-20	.250"	.875"	.500"	.250"	.780"	.076 lb
2097-Black	15	.625"	1.655"	.750"	.375"	1/4-20	.250"	.875"	.500"	.250"	.780"	.076 lb
25-2077	25	9.40mm	29.00mm	19.05mm	9.53mm	M5 x 0.8	6.15mm	18.90mm	13.00mm	6.20mm	13.40mm	.0213 kg
25-2077-Black	25	9.40mm	29.00mm	19.05mm	9.53mm	M5 x 0.8	6.15mm	18.90mm	13.00mm	6.20mm	13.40mm	.0213 kg
40-2097	40	16.85mm	43.60mm	19.05mm	9.53mm	M6 x 1.0	6.15mm	18.90mm	13.00mm	6.12mm	20.70mm	.0386 kg
40-2097-Black	40	16.85mm	43.60mm	19.05mm	9.53mm	M6 x 1.0	6.15mm	18.90mm	13.00mm	6.12mm	20.70mm	.0386 kg

*The gap distance between the two mating profiles is .063" (1.60mm)

Material Specifications

Part No.	Material	Alloy	Process	Finish
2077	Aluminum	6005A – T61	Milled	Clear Anodize
2077-Black				Black Anodize
2097				Clear Anodize
2097-Black				Black Anodize
25-2077				Clear Anodize
25-2077-Black				Black Anodize
40-2097				Clear Anodize
40-2097-Black				Black Anodize

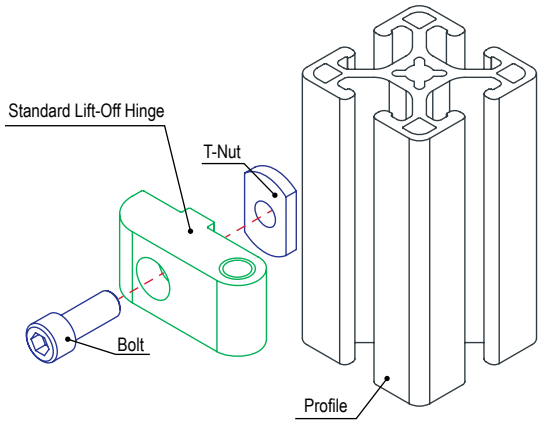

Included Hardware (Mount to T-Slot)

Series	Part No.	Qty.	Bolt	Part No.	Qty.	T-Nut
10	3048	1	10-32 x 1/2" SHCS (Black)	3276	1	Economy
15	3067	1	1/4-20 x 5/8" SHCS (Black)	3286	1	Economy
25	13-5512	1	M5 x 12mm SHCS (Blue)	25-1951	1	Economy
40	13-6516	1	M6 x 16mm SHCS (Blue)	3836	1	Economy

80/20 BUILD YOUR IDEA
More on 80/20® products available at 8020.net

Standard Lift-Off Hinge with Double Short Pins

- Used with two standard lift-off hinge mating hubs (pg. 4-74) to create a captivated assembly
- Mounting hardware included

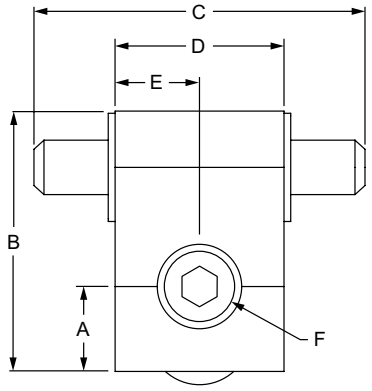

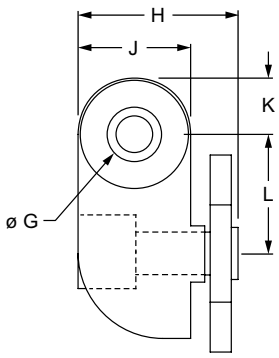

Part No.	Series	A	B	C	D	E	F	G	H	J	K	L	Weight
2078	10	.377"	1.156"	1.470"	.750"	.375"	10-32	.242"	.750"	.500"	.250"	.529"	.063 lb
2078-Black	10	.377"	1.156"	1.470"	.750"	.375"	10-32	.242"	.750"	.500"	.250"	.529"	.063 lb
2098	15	.625"	1.655"	1.470"	.750"	.375"	1/4-20	.242"	.875"	.500"	.250"	.780"	.089 lb
2098-Black	15	.625"	1.655"	1.470"	.750"	.375"	1/4-20	.242"	.875"	.500"	.250"	.780"	.089 lb
25-2078	25	9.40mm	29.00mm	37.30mm	19.05mm	9.53mm	M5 x 0.8	6.15mm	18.90mm	13.00mm	6.20mm	13.40mm	.0277 kg
25-2078-Black	25	9.40mm	29.00mm	37.30mm	19.05mm	9.53mm	M5 x 0.8	6.15mm	18.90mm	13.00mm	6.20mm	13.40mm	.0277 kg
40-2098	40	16.85mm	43.60mm	37.30mm	19.05mm	9.53mm	M6 x 1.0	6.15mm	18.90mm	13.00mm	6.12mm	20.70mm	.0448 kg
40-2098-Black	40	16.85mm	43.60mm	37.30mm	19.05mm	9.53mm	M6 x 1.0	6.15mm	18.90mm	13.00mm	6.12mm	20.70mm	.0448 kg

*The gap distance between the two mating profiles is .063" (1.60mm)

Material Specifications

Part No.	Material	Alloy	Process	Finish
2078	Aluminum	6005A – T61	Milled	Clear Anodize
2078-Black				Black Anodize
2098				Clear Anodize
2098-Black				Black Anodize
25-2078				Clear Anodize
25-2078-Black				Black Anodize
40-2098				Clear Anodize
40-2098-Black				Black Anodize

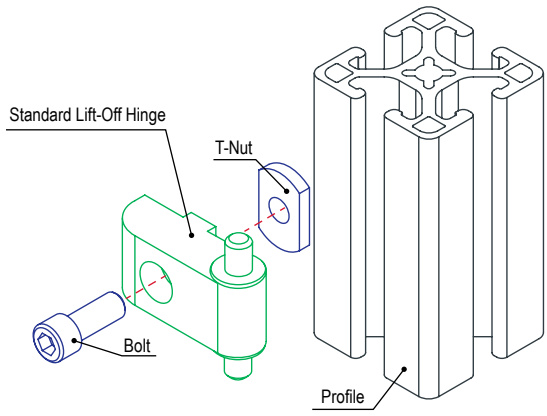

Included Hardware (Mount to T-Slot)

Series	Part No.	Qty.	Bolt	Part No.	Qty.	T-Nut
10	3048	1	10-32 x 1/2" SHCS (Black)	3276	1	Economy
15	3067	1	1/4-20 x 5/8" SHCS (Black)	3286	1	Economy
25	13-5512	1	M5 x 12mm SHCS (Blue)	25-1951	1	Economy
40	13-6516	1	M6 x 16mm SHCS (Blue)	3836	1	Economy

Panels & Doors

Standard Lift-Off Hinge - Right Hand Assembly

Part No.	Series	Assembly Components			Finish	Weight	Product Representation
2064	10	2073 Right Hand with Single Long Pin (Qty. 1)	2075 Right Hand with Single Short Pin (Qty. 1)	2077 Mating Hub (Qty. 2)	Clear Anodize	.214 lb	
2064-Black	10	2073 Right Hand with Single Long Pin (Qty. 1)	2075 Right Hand with Single Short Pin (Qty. 1)	2077 Mating Hub (Qty. 2)	Black Anodize	.214 lb	
2104	15	2093 Right Hand with Single Long Pin (Qty. 1)	2095 Right Hand with Single Short Pin (Qty. 1)	2097 Mating Hub (Qty. 2)	Clear Anodize	.322 lb	
2104-Black	15	2093 Right Hand with Single Long Pin (Qty. 1)	2095 Right Hand with Single Short Pin (Qty. 1)	2097 Mating Hub (Qty. 2)	Black Anodize	.322 lb	
2101	10 to 15	2093 Right Hand with Single Long Pin (Qty. 1)	2095 Right Hand with Single Short Pin (Qty. 1)	2077 Mating Hub (Qty. 2)	Clear Anodize	.262 lb	
2101-Black	10 to 15	2093 Right Hand with Single Long Pin (Qty. 1)	2095 Right Hand with Single Short Pin (Qty. 1)	2077 Mating Hub (Qty. 2)	Black Anodize	.262 lb	
25-2064	25	25-2073 Right Hand with Single Long Pin (Qty. 1)	25-2075 Right Hand with Single Short Pin (Qty. 1)	25-2077 Mating Hub (Qty. 2)	Clear Anodize	.0934 kg	
25-2064-Black	25	25-2073 Right Hand with Single Long Pin (Qty. 1)	25-2075 Right Hand with Single Short Pin (Qty. 1)	25-2077 Mating Hub (Qty. 2)	Black Anodize	.0934 kg	
40-2104	40	40-2093 Right Hand with Single Long Pin (Qty. 1)	40-2095 Right Hand with Single Short Pin (Qty. 1)	40-2097 Mating Hub (Qty. 2)	Clear Anodize	.1633 kg	
40-2104-Black	40	40-2093 Right Hand with Single Long Pin (Qty. 1)	40-2095 Right Hand with Single Short Pin (Qty. 1)	40-2097 Mating Hub (Qty. 2)	Black Anodize	.1633 kg	
65-2101	25 to 40	40-2093 Right Hand with Single Long Pin (Qty. 1)	40-2095 Right Hand with Single Short Pin (Qty. 1)	25-2077 Mating Hub (Qty. 2)	Clear Anodize	.1280 kg	
65-2101-Black	25 to 40	40-2093 Right Hand with Single Long Pin (Qty. 1)	40-2095 Right Hand with Single Short Pin (Qty. 1)	25-2077 Mating Hub (Qty. 2)	Black Anodize	.1280 kg	

80/20 BUILD YOUR IDEA
More on 80/20® products available at 8020.net

Standard Lift-Off Hinge - Left Hand Assembly

Part No.	Series	Assembly Components			Finish	Weight	Product Representation
2065	10	2074 Left Hand with Single Long Pin (Qty. 1)	2076 Left Hand with Single Short Pin (Qty. 1)	2077 Mating Hub (Qty. 2)	Clear Anodize	.212 lb	
2065-Black	10	2074 Left Hand with Single Long Pin (Qty. 1)	2076 Left Hand with Single Short Pin (Qty. 1)	2077 Mating Hub (Qty. 2)	Black Anodize	.212 lb	
2105	15	2094 Left Hand with Single Long Pin (Qty. 1)	2096 Left Hand with Single Short Pin (Qty. 1)	2097 Mating Hub (Qty. 2)	Clear Anodize	.323 lb	
2105-Black	15	2094 Left Hand with Single Long Pin (Qty. 1)	2096 Left Hand with Single Short Pin (Qty. 1)	2097 Mating Hub (Qty. 2)	Black Anodize	.323 lb	
2102	10 to 15	2094 Left Hand with Single Long Pin (Qty. 1)	2096 Left Hand with Single Short Pin (Qty. 1)	2077 Mating Hub (Qty. 2)	Clear Anodize	.268 lb	
2102-Black	10 to 15	2094 Left Hand with Single Long Pin (Qty. 1)	2096 Left Hand with Single Short Pin (Qty. 1)	2077 Mating Hub (Qty. 2)	Black Anodize	.268 lb	
25-2065	25	25-2074 Left Hand with Single Long Pin (Qty. 1)	25-2076 Left Hand with Single Short Pin (Qty. 1)	25-2077 Mating Hub (Qty. 2)	Clear Anodize	.0928 kg	
25-2065-Black	25	25-2074 Left Hand with Single Long Pin (Qty. 1)	25-2076 Left Hand with Single Short Pin (Qty. 1)	25-2077 Mating Hub (Qty. 2)	Black Anodize	.0928 kg	
40-2105	40	40-2094 Left Hand with Single Long Pin (Qty. 1)	40-2096 Left Hand with Single Short Pin (Qty. 1)	40-2097 Mating Hub (Qty. 2)	Clear Anodize	.1637 kg	
40-2105-Black	40	40-2094 Left Hand with Single Long Pin (Qty. 1)	40-2096 Left Hand with Single Short Pin (Qty. 1)	40-2097 Mating Hub (Qty. 2)	Black Anodize	.1637 kg	
65-2102	25 to 40	40-2094 Left Hand with Single Long Pin (Qty. 1)	40-2096 Left Hand with Single Short Pin (Qty. 1)	25-2077 Mating Hub (Qty. 2)	Clear Anodize	.1270 kg	
65-2102-Black	25 to 40	40-2094 Left Hand with Single Long Pin (Qty. 1)	40-2096 Left Hand with Single Short Pin (Qty. 1)	25-2077 Mating Hub (Qty. 2)	Black Anodize	.1270 kg	

Panels & Doors

Standard Captive Lift-Off Hinge Assembly

Part No.	Series	Assembly Components			Finish	Weight	Product Representation
2066	10	2075 Right Hand with Single Short Pin (Qty. 1)	2076 Left Hand with Single Short Pin (Qty. 1)	2077 Mating Hub (Qty. 1)	Clear Anodize	.160 lb	
2066-Black	10	2075 Right Hand with Single Short Pin (Qty. 1)	2076 Left Hand with Single Short Pin (Qty. 1)	2077 Mating Hub (Qty. 1)	Black Anodize	.160 lb	
2106	15	2095 Right Hand with Single Short Pin (Qty. 1)	2096 Left Hand with Single Short Pin (Qty. 1)	2097 Mating Hub (Qty. 1)	Clear Anodize	.242 lb	
2106-Black	15	2095 Right Hand with Single Short Pin (Qty. 1)	2096 Left Hand with Single Short Pin (Qty. 1)	2097 Mating Hub (Qty. 1)	Black Anodize	.242 lb	
2103	10 to 15	2095 Right Hand with Single Short Pin (Qty. 1)	2096 Left Hand with Single Short Pin (Qty. 1)	2077 Mating Hub (Qty. 1)	Clear Anodize	.214 lb	
2103-Black	10 to 15	2095 Right Hand with Single Short Pin (Qty. 1)	2096 Left Hand with Single Short Pin (Qty. 1)	2077 Mating Hub (Qty. 1)	Black Anodize	.214 lb	
25-2066	25	25-2075 Right Hand with Single Short Pin (Qty. 1)	25-2076 Left Hand with Single Short Pin (Qty. 1)	25-2077 Mating Hub (Qty. 1)	Clear Anodize	.0696 kg	
25-2066-Black	25	25-2075 Right Hand with Single Short Pin (Qty. 1)	25-2076 Left Hand with Single Short Pin (Qty. 1)	25-2077 Mating Hub (Qty. 1)	Black Anodize	.0696 kg	
40-2106	40	40-2095 Right Hand with Single Short Pin (Qty. 1)	40-2096 Left Hand with Single Short Pin (Qty. 1)	40-2097 Mating Hub (Qty. 1)	Clear Anodize	.0417 kg	
40-2106-Black	40	40-2095 Right Hand with Single Short Pin (Qty. 1)	40-2096 Left Hand with Single Short Pin (Qty. 1)	40-2097 Mating Hub (Qty. 1)	Black Anodize	.0417 kg	
65-2103	25 to 40	40-2095 Right Hand with Single Short Pin (Qty. 1)	40-2096 Left Hand with Single Short Pin (Qty. 1)	25-2077 Mating Hub (Qty. 1)	Clear Anodize	.1044 kg	
65-2103-Black	25 to 40	40-2095 Right Hand with Single Short Pin (Qty. 1)	40-2096 Left Hand with Single Short Pin (Qty. 1)	25-2077 Mating Hub (Qty. 1)	Black Anodize	.1044 kg	

80/20 BUILD YOUR IDEA
More on 80/20® products available at 8020.net

Economy Lift-Off Hinge Right Hand with Short Pin

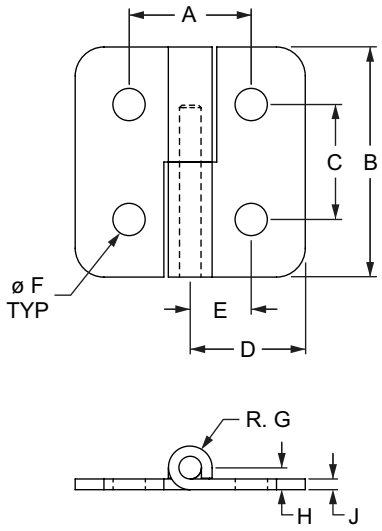

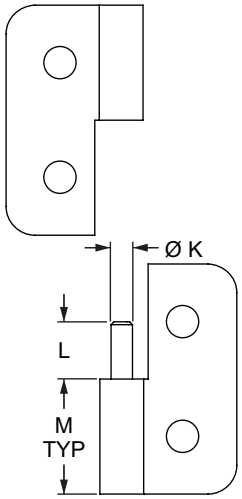

Part No.	Series	Max Load	A	B	C	D	E	F	G	H	J	K	L	M	Weight
2837	10	40 lb	1.062"	2.000"	1.000"	1.000"	.531"	.281"	.191"	.191"	.093"	.187"	.500"	1.000"	.045 lb
2839	15	70 lb	1.620"	3.000"	1.500"	1.500"	.812"	.328"	.250"	.250"	.120"	.250"	.750"	1.500"	.134 lb
25-2837	25	18 kg	26.97mm	50.80mm	25.40mm	25.40mm	13.48mm	7.13mm	4.85mm	4.85mm	2.36mm	4.75mm	12.70mm	25.40mm	.0200 kg
40-2839	40	32 kg	41.15mm	76.20mm	38.10mm	38.10mm	20.62mm	8.30mm	6.35mm	6.35mm	3.05mm	6.35mm	19.05mm	50.80mm	.2758 kg

*The gap distance between profiles for 10 series is .062", 15 series is .120", 25 series is 1.97mm, 40 series is 1.15mm.

Material Specifications

Material	Alloy	Finish	Process
Aluminum	5052-H32 = Leaf 6061-T6 = Pin	Clear Anodize	Milled

Suggested Hardware (Mount to T-Slot)

Part No.	Series	Qty.	Bolt	T-Nut
3386	10	4	1/4-20 x 3/8 FBHSCS	Economy
3319	15	4	5/16-18 x 1/2 FBHSCS	Economy
75-3404	25	4	M6 x 10mm BHSCS	Economy
75-3421	40	4	M8 x 12mm BHSCS	Economy

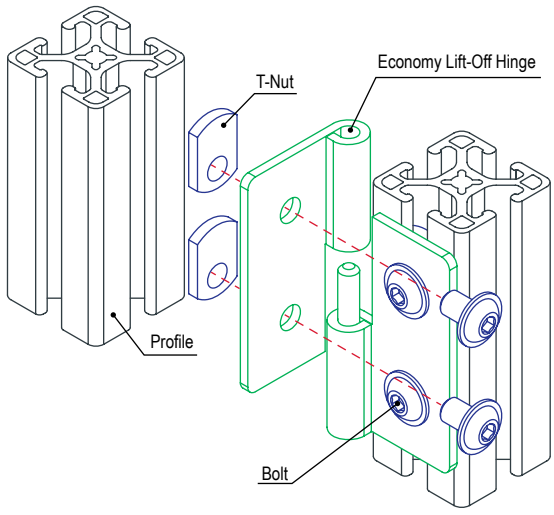

Panels & Doors

Economy Lift-Off Hinge Right Hand with Long Pin

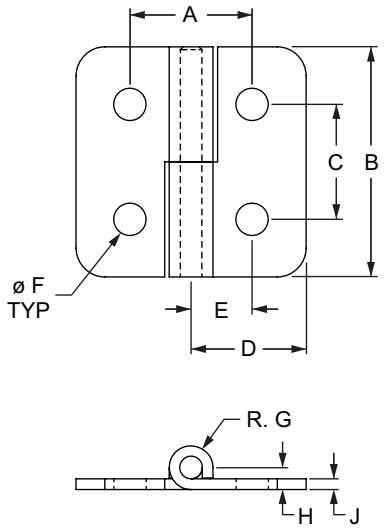

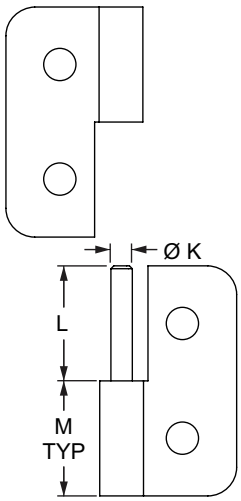

Part No.	Series	Max Load	A	B	C	D	E	F	G	H	J	K	L	M	Weight
2838	10	40 lb	1.062"	2.000"	1.000"	1.000"	.531"	.281"	.191"	.191"	.093"	.187"	1.000"	1.000"	.047 lb
2840	15	70 lb	1.620"	3.000"	1.500"	1.500"	.812"	.328"	.250"	.250"	.120"	.250"	1.500"	1.500"	.140 lb
25-2838	25	18 kg	26.97mm	50.80mm	25.40mm	25.40mm	13.48mm	7.13mm	4.85mm	4.85mm	2.36mm	4.75mm	25.40mm	25.40mm	.0208 kg
40-2840	40	32 kg	41.15mm	76.20mm	38.10mm	38.10mm	20.62mm	8.30mm	6.35mm	6.35mm	3.05mm	6.35mm	50.80mm	50.80mm	.0642 kg

*The gap distance between profiles for 10 series is .062", 15 series is .120", 25 series is 1.97mm, 40 series is 1.15mm.

Material Specifications

Material	Alloy	Finish	Process
Aluminum	5052-H32 = Leaf 6061-T6 = Pin	Clear Anodize	Milled

Suggested Hardware (Mount to T-Slot)

Part No.	Series	Qty.	Bolt	T-Nut
3386	10	4	1/4-20 x 3/8 FBHSCS	Economy
3319	15	4	5/16-18 x 1/2 FBHSCS	Economy
75-3404	25	4	M6 x 10mm BHSCS	Economy
75-3421	40	4	M8 x 12mm BHSCS	Economy

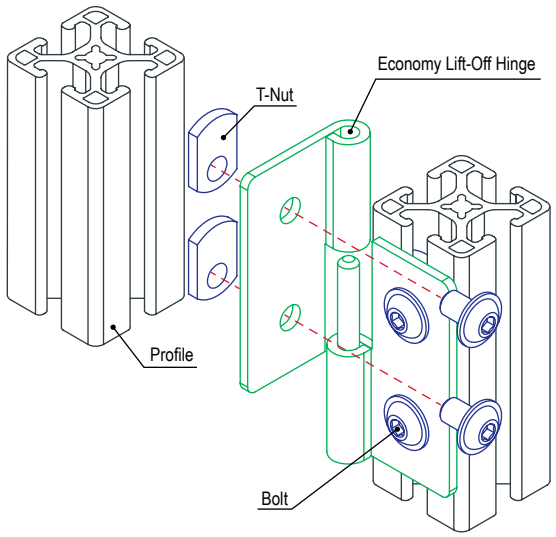

80/20 BUILD YOUR IDEA
More on 80/20® products available at 8020.net

Economy Lift-Off Hinge Left Hand with Short Pin

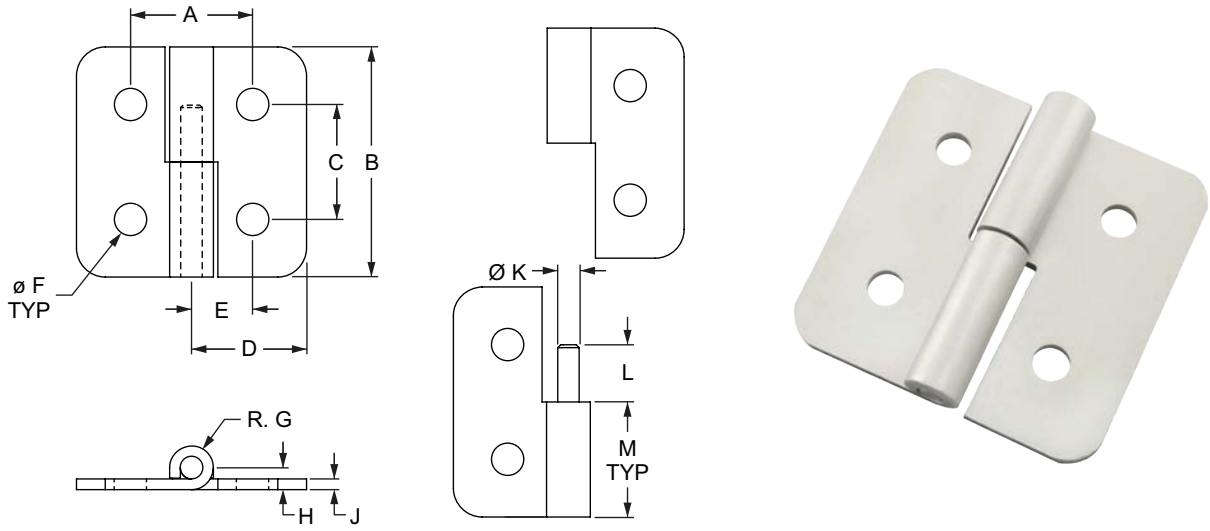

Part No.	Series	Max Load	A	B	C	D	E	F	G	H	J	K	L	M	Weight
2830	10	40 lb	1.062"	2.000"	1.000"	1.000"	.531"	.281"	.191"	.191"	.093"	.187"	.500"	1.000"	.045 lb
2832	15	70 lb	1.620"	3.000"	1.500"	1.500"	.812"	.328"	.250"	.250"	.120"	.250"	1.500"	1.500"	.134 lb
25-2830	25	18 kg	26.97mm	50.80mm	25.40mm	25.40mm	13.48mm	7.13mm	4.85mm	4.85mm	2.36mm	4.75mm	12.70mm	25.40mm	.0090 kg
40-2832	40	32 kg	41.15mm	76.20mm	38.10mm	41.02mm	20.62mm	8.30mm	6.35mm	6.35mm	3.05mm	6.35mm	19.05mm	50.80mm	.0607 kg

*The gap distance between profiles for 10 series is .062", 15 series is .120", 25 series is 1.97mm, 40 series is 1.15mm.

Material Specifications

Material	Alloy	Finish	Process
Aluminum	5052-H32 = Leaf 6061-T6 = Pin	Clear Anodize	Milled

Suggested Hardware (Mount to T-Slot)

Part No.	Series	Qty.	Bolt	T-Nut
3386	10	4	1/4-20 x 3/8 FBHSCS	Economy
3319	15	4	5/16-18 x 1/2 FBHSCS	Economy
75-3404	25	4	M6 x 10mm BHSCS	Economy
75-3421	40	4	M8 x 12mm BHSCS	Economy

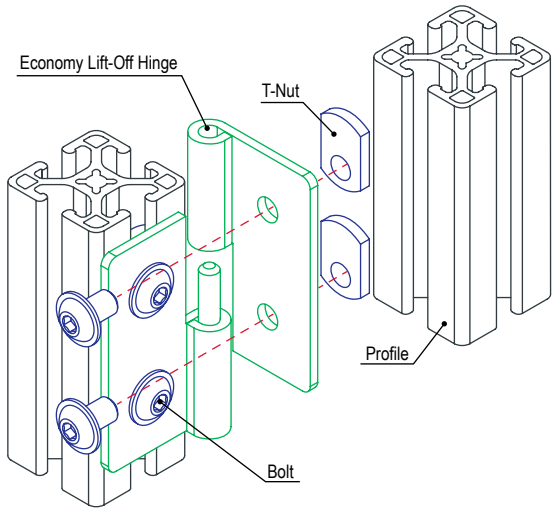

Panels & Doors

Economy Lift-Off Hinge Left Hand with Long Pin

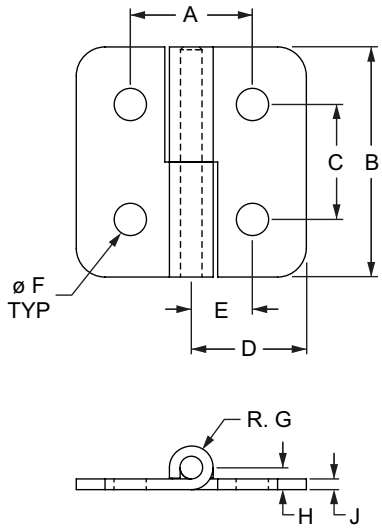

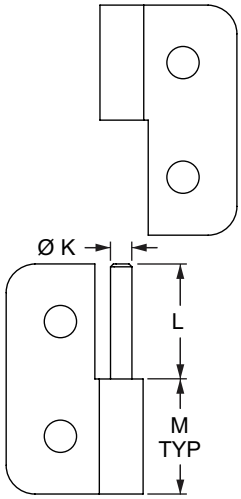

Part No.	Series	Max Load	A	B	C	D	E	F	G	H	J	K	L	M	Weight
2831	10	40 lb	1.062"	2.000"	1.000"	1.000"	.531"	.281"	.191"	.191"	.093"	.187"	1.000"	1.000"	.045 lb
2833	15	70 lb	1.620"	3.000"	1.500"	1.500"	.812"	.328"	.250"	.250"	.120"	.250"	1.500"	1.500"	.134 lb
25-2831	25	18 kg	26.97mm	50.80mm	25.40mm	25.40mm	13.48mm	7.13mm	4.85mm	4.85mm	2.36mm	4.75mm	25.40mm	25.40mm	.02041 kg
40-2833	40	32 kg	41.15mm	76.20mm	38.10mm	30.52mm	20.62mm	8.30mm	6.35mm	6.35mm	3.05mm	6.35mm	50.80mm	50.80mm	.0629 kg

*The gap distance between profiles for 10 series is .062", 15 series is .120", 25 series is 1.97mm, 40 series is 1.15mm.

Material Specifications

Material	Alloy	Finish	Process
Aluminum	5052-H32 = Leaf 6061-T6 = Pin	Clear Anodize	Milled

Suggested Hardware (Mount to T-Slot)

Part No.	Series	Qty.	Bolt	T-Nut
3386	10	4	1/4-20 x 3/8 FBHSCS	Economy
3319	15	4	5/16-18 x 1/2 FBHSCS	Economy
75-3404	25	4	M6 x 10mm BHSCS	Economy
75-3421	40	4	M8 x 12mm BHSCS	Economy

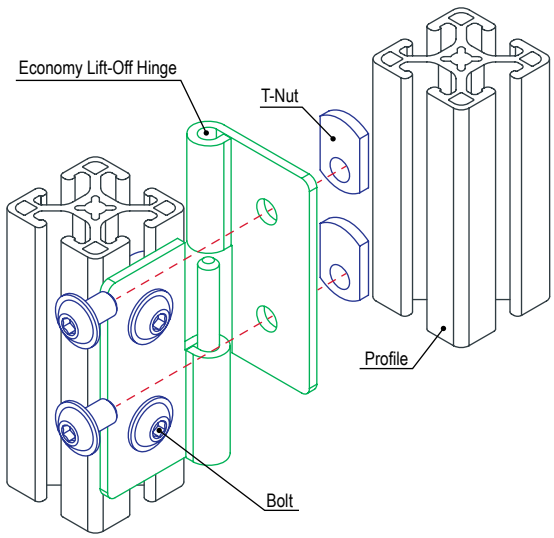

80/20 BUILD YOUR IDEA
More on 80/20® products available at 8020.net

Economy Lift-Off Hinge Assembly

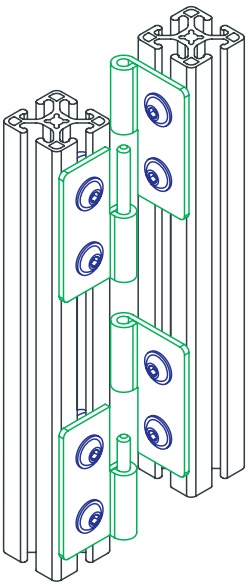

Left Hinge: 2835, 25-2835

Left Hinge: 2836, 40-2836

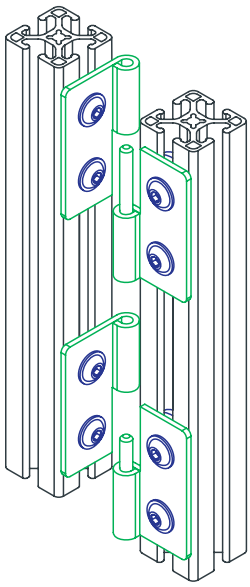

Right Hinge: 2841, 25-2841

Right Hinge: 2842, 40-2842

Part No.	Series	Orientation	Material	Alloy	Finish	Process	Weight
2841	10	Right Hinge	Aluminum	5052-H32 = Leaf 6061-T6 = Pin	Clear Anodize	Milled	.090 lb
2835	10	Left Hinge					.088 lb
2842	15	Right Hinge					.270 lb
2836	15	Left Hinge					.270 lb
25-2841	25	Right Hinge					.0186 kg
25-2835	25	Left Hinge					.0181 kg
40-2842	40	Right Hinge					.1211 kg
40-2836	40	Left Hinge					.1220 kg

* Hinge assemblies include (2) hinges; one long pin, and one short pin.

Suggested Hardware (Mount to T-Slot)

Part No.	Series	Qty.	Bolt	T-Nut
3386	10	8	1/4-20 x 3/8 FBHSCS	Economy
3319	15	8	5/16-18 x 1/2 FBHSCS	Economy
75-3404	25	8	M6 x 10mm BHSCS	Economy
75-3421	40	8	M8 x 12mm BHSCS	Economy

Panels & Doors

4 Hole - Concealed Hinge

- Hinge mounts to inside of frame and is not able to be dismantled when door is shut

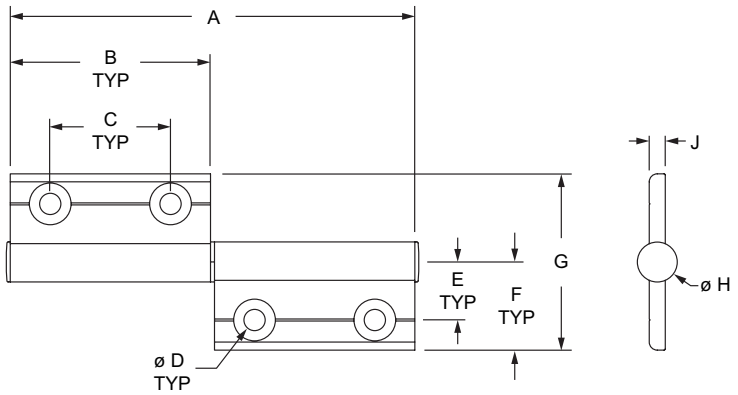

Part No.	Series	A	B	C	D	E	F	G	H	J*	Weight
2324	20	3.976"	1.969"	1.181"	.209"	.571"	.866"	1.732"	.394"	.157"	.033 lb
2325	10 25	3.976"	1.969"	1.181"	.252"	.689"	1.102"	2.205"	.394"	.157"	.040 lb
2326	30	3.976"	1.969"	1.181"	.252"	.768"	1.260"	2.520"	.394"	.157"	.044 lb
2327	15 40	3.976"	1.969"	1.181"	.252"	.984"	1.654"	3.307"	.394"	.157"	.055 lb
2328	45	3.976"	1.969"	1.181"	.252"	1.063"	1.850"	3.701"	.394"	.157"	.062 lb

*Dimension "J" also defines the hinge gap between two profiles.

Material Specifications

Material	Alloy	Finish	Process
Aluminum	6060	Clear Anodize	Extruded

Suggested Hardware (Mount to T-Slot)

Series	Part No.	Qty.	Bolt	Part No.	Qty.	T-Nut
20	11-5708	4	M5 x 8mm FHSCS	14122	4	Slide-in
10 25	13-6710	4	M6 x 10mm FHSCS	25-1961	4	Slide-in
30	13-6712	4	M6 x 12mm FHSCS	30-1961	4	Slide-in
15	11-6714	4	M6 x 14mm FHSCS	3836	4	Slide-in
40	11-6714	4	M6 x 14mm FHSCS	40-1961	4	Slide-in
45	13-6716	4	M6 x 16mm FHSCS	14126	4	Slide-in

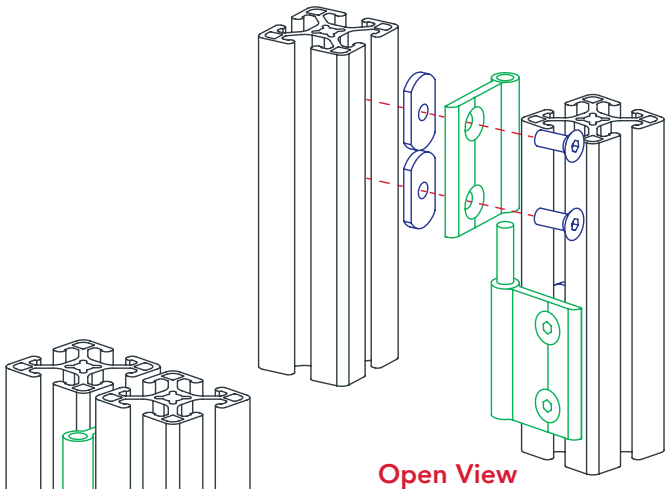

Open View

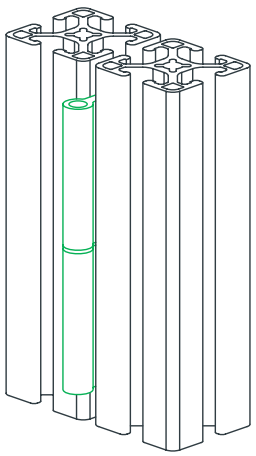

Closed View

80/20 BUILD YOUR IDEA
More on 80/20® products available at 8020.net

4 Hole - Dual Hand Lift-Off Hinge

- Strong option with countersink on both sides to allow for right or left hand use

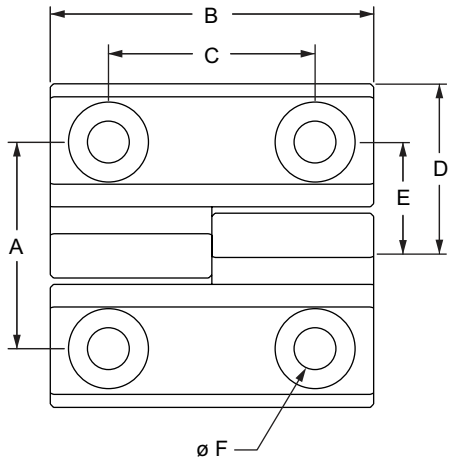

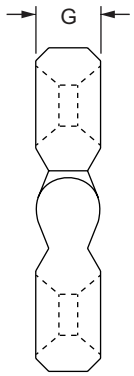

Part No.	Series	Max Load	A	B	C	D	E	F	G	Weight
12095	10 25 30	300 Nm / 221 ft-Lbs.	32.00mm	50.00mm	32.00mm	25.00mm	16.00mm	6.40mm	10.00mm	.1488 kg

Material Specifications

Material	Finish	Process	Color
Stainless-Steel	Stainless	Machined	Silver

Suggested Hardware (Mount to T-Slot)

Part No.	Series	Qty.	Bolt	T-Nut
75-3647	10 25	4	M6 x 16mm FHSCS	Roll-in
75-3591	30	4	M6 x 16mm FHSCS	Drop-in

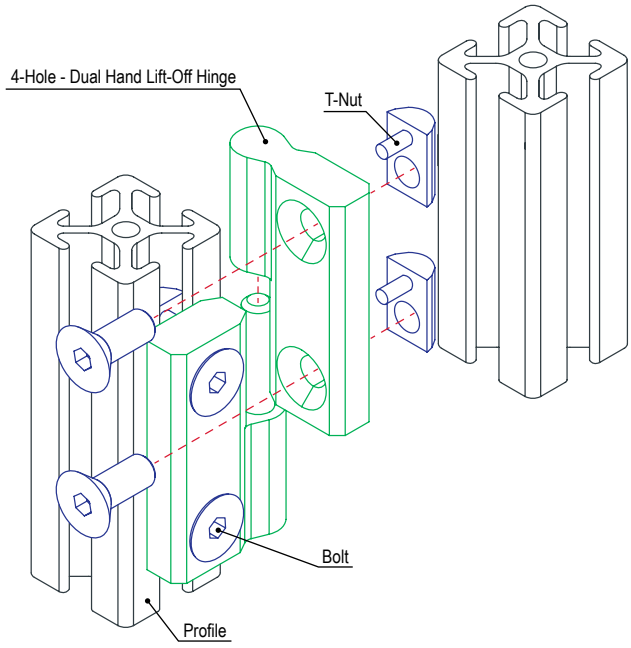

Panels & Doors

4 Hole - Plastic Lift-Off Hinge

- Used to connect plastic panels and lightweight doors
- Available in options with slot tabs for alignment

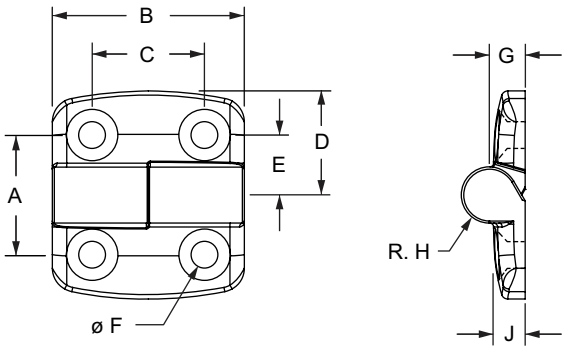

Left Hand

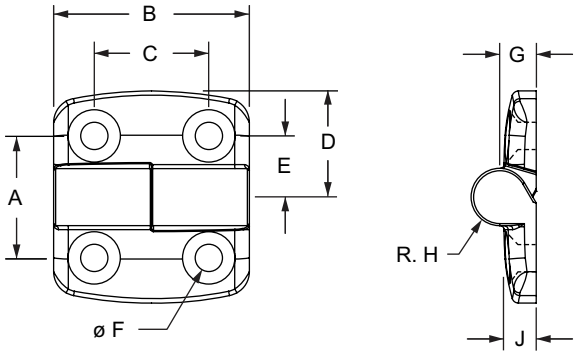

Right Hand

Part No.	Series	Orientation	Max Load	Slot Tab	A	B	C	D	E	F	G	H	J	Weight
12101	10 25	Left Hand	25 Nm / 18 ft-Lbs.	—	30.00mm	48.00mm	28.00mm	26.00mm	15.00mm	6.60mm	8.95mm	7.00mm	7.90mm	.0329 kg
12102	10 25	Left Hand		6.00mm	30.00mm	48.00mm	28.00mm	26.00mm	15.00mm	6.60mm	8.90mm	7.00mm	7.90mm	.0337 kg
12104	10 25	Right Hand		—	30.00mm	48.00mm	28.00mm	26.00mm	15.00mm	6.60mm	8.95mm	7.00mm	7.90mm	.0334 kg
12105	10 25	Right Hand		6.00mm	30.00mm	48.00mm	28.00mm	26.00mm	15.00mm	6.60mm	8.90mm	7.00mm	7.90mm	.0335 kg
12119	15	Left Hand	25 ft-Lbs.	—	40.00mm	48.00mm	28.00mm	35.50mm	20.00mm	6.60mm	8.90mm	7.00mm	8.70mm	.0404 kg
12120	15	Left Hand		8.00mm	40.00mm	48.00mm	28.00mm	35.50mm	20.00mm	6.60mm	8.90mm	7.00mm	7.90mm	.0399 kg
12122	15	Right Hand		—	40.00mm	48.00mm	28.00mm	35.50mm	20.00mm	6.60mm	8.90mm	7.00mm	7.90mm	.0403 kg
12123	15	Right Hand		8.00mm	40.00mm	48.00mm	28.00mm	35.50mm	20.00mm	6.60mm	8.90mm	7.00mm	7.90mm	.0399 kg
12128	15 40	Left Hand	35 Nm / 25 ft-Lbs.	—	45.00mm	48.00mm	28.00mm	38.50mm	22.50mm	6.60mm	8.90mm	7.00mm	7.90mm	.0429 kg
12129	15 40	Left Hand		8.00mm	45.00mm	48.00mm	28.00mm	38.50mm	22.50mm	6.60mm	8.90mm	7.00mm	7.50mm	.0437 kg
12131	15 40	Right Hand		—	45.00mm	48.00mm	28.00mm	38.50mm	22.50mm	6.60mm	8.90mm	7.00mm	7.60mm	.0438 kg
12132	15 40	Right Hand		8.00mm	45.00mm	48.00mm	28.00mm	38.50mm	22.50mm	6.60mm	8.90mm	7.00mm	7.50mm	.0449 kg
12110	30	Left Hand	25 Nm / 18 ft-Lbs.	—	35.00mm	48.00mm	28.00mm	29.50mm	17.50mm	6.60mm	8.90mm	7.00mm	8.50mm	.0367 kg
12111	30	Left Hand		8.00mm	35.00mm	48.00mm	28.00mm	29.50mm	17.50mm	6.60mm	8.90mm	7.00mm	7.90mm	.0365kg
12113	30	Right Hand		—	35.00mm	48.00mm	28.00mm	29.50mm	17.50mm	6.60mm	8.90mm	7.00mm	8.40mm	.0374 kg
12114	30	Right Hand		8.00mm	35.00mm	48.00mm	28.00mm	29.50mm	17.50mm	6.60mm	8.90mm	7.00mm	7.20mm	.0358 kg
12137	45	Left Hand	35 Nm / 25 ft-Lbs.	—	50.00mm	48.00mm	28.00mm	43.50mm	25.00mm	6.60mm	8.90mm	7.00mm	7.90mm	.0469 kg
12139	45	Left Hand		10.00mm	50.00mm	48.00mm	28.00mm	43.50mm	25.00mm	6.60mm	8.90mm	7.00mm	7.90mm	.0467 kg
12140	45	Right Hand		—	50.00mm	48.00mm	28.00mm	43.50mm	25.00mm	6.60mm	8.90mm	7.00mm	7.60mm	.0470 kg
12142	45	Right Hand		10.00mm	50.00mm	48.00mm	28.00mm	43.50mm	25.00mm	6.60mm	8.90mm	7.00mm	7.60mm	.0469 kg

*The gap distance between profiles is .075" (1.90mm)

80/20 BUILD YOUR IDEA
More on 80/20® products available at 8020.net

4 Hole - Plastic Lift-Off Hinge (Continued)

Material Specifications

Material	Grade	Color	Process
Nylon PA Glass Fiber Reinforced	PA6GF30	Black	Injection Molding

Suggested Hardware Per Leaf (Mount to Panel)

Part No.	Series	Qty.	Bolt	Hex Nut	Washer
75-3589	10 15 25 30 40 45	2	M6 x 20mm FHSCS	Yes	Yes

Suggested Hardware Per Leaf (Mount to T-Slot)

Part No.	Series	Qty.	Bolt	T-Nut
75-3584	10 25	2	M6 x 14mm FHSCS	Slide-in
75-3585	30	2	M6 x 14mm FHSCS	Drop-in
75-3628	15 40	2	M6 x 18mm FHSCS	Drop-in
75-3587	45	2	M6 x 18mm FHSCS	Drop-in

Left Hand

Pin on the left, door opens right to left

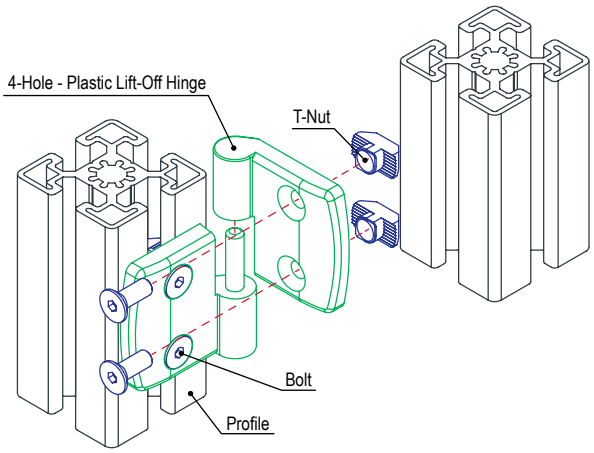

Right Hand

Pin on the right, door opens left to right

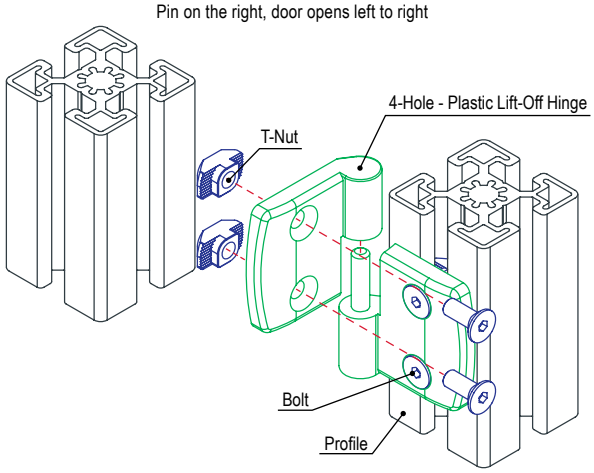

Panels & Doors

2 Hole - Plastic Lift-Off Hinge

- Used to connect plastic panels and lightweight doors

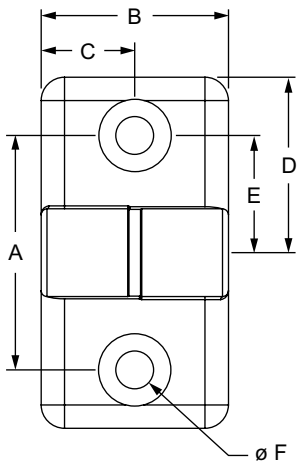

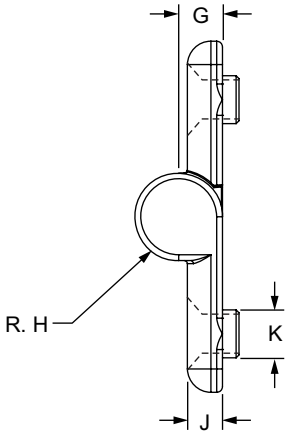

Part No.	Series	Orientation	Max Load	A	B	C	D	E	F	G	H	J	K	Weight
12072	15	Left	20 ft-Lbs.	1.575"	1.260"	.630"	1.181"	.787"	.252"	.295"	.295"	.236"	.323"	.046 lb
12073	15	Right		1.575"	1.260"	.630"	1.181"	.787"	.252"	.295"	.295"	.236"	.323"	.048 lb

*The gap distance between profiles is .075" (1.90mm)

Material Specifications

Material	Grade	Color	Process
Nylon PA Glass Fiber Reinforced	PA6GF30	Black	Injection Molding

Suggested Hardware (Mount to T-Slot)

Part No.	Series	Qty.	Bolt	T-Nut
75-3628	15	2	M6 x 18mm FHSCS	Drop-in

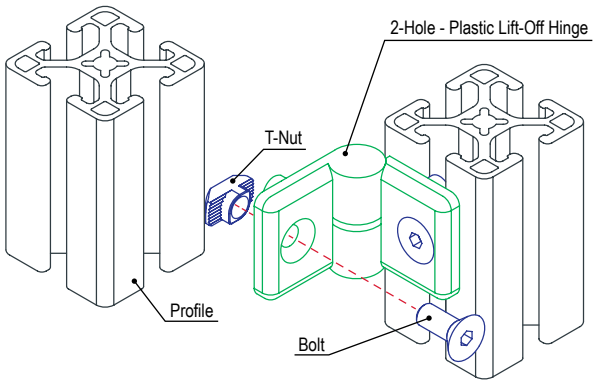

80/20 BUILD YOUR IDEA
More on 80/20® products available at 8020.net

3 Hole - Plastic Double Lift-Off Hinge

- Used with combination of plastic panels and T-slot profiles to create adjacent access points

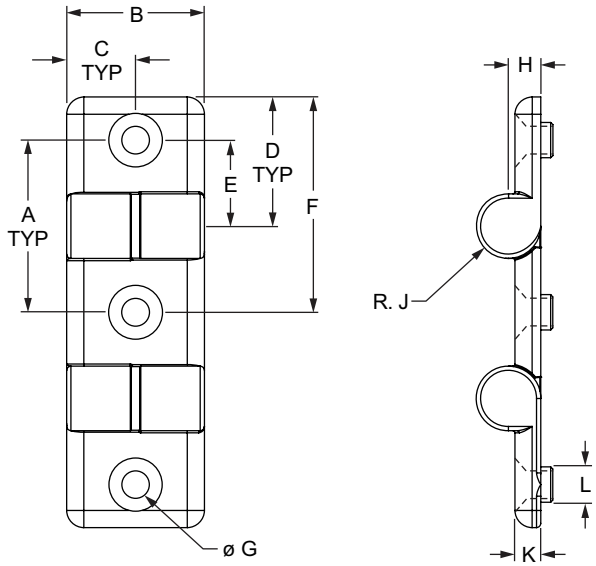

Part No.	Series	Max Load	A	B	C	D	E	F	G	H	J	K	L	Weight
12071	15	20 ft-Lbs.	1.575"	1.260"	.630"	1.181"	.787"	1.969"	.252"	.295"	.295"	.236"	.323"	.086 lb

*The gap distance between profiles is .075" (1.90mm)

Material Specifications

Material	Grade	Color	Process
Nylon PA Glass Fiber Reinforced	PA6GF30	Black	Injection Molding

Suggested Hardware (Mount to T-Slot)

Part No.	Series	Qty.	Bolt	T-Nut
75-3628	15	3	M6 x 18mm FHSCS	Drop-in

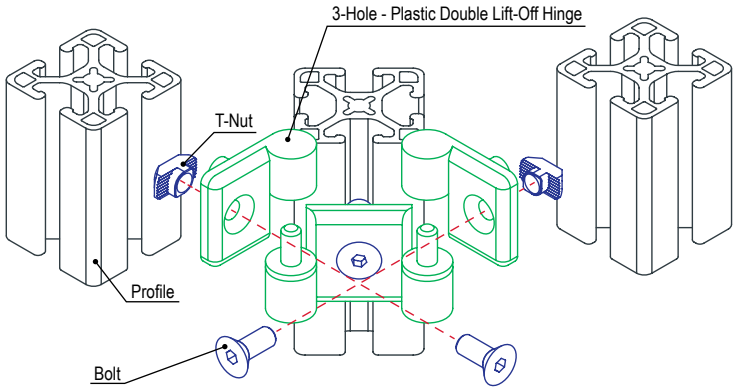

Panels & Doors

4 Hole - Adjustable Hinge

- Universal, vertical and horizontal versions available
- Slotted holes support fastening adjustments

Universal

Vertical

Horizontal

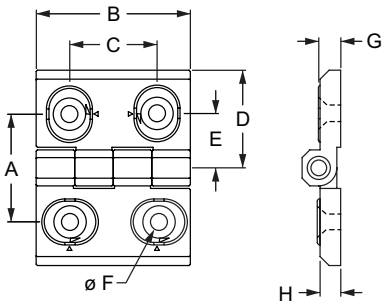

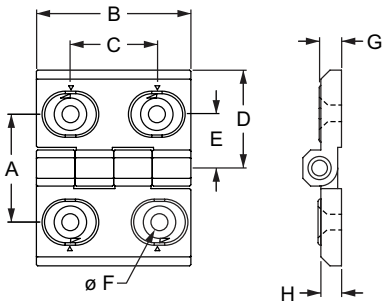

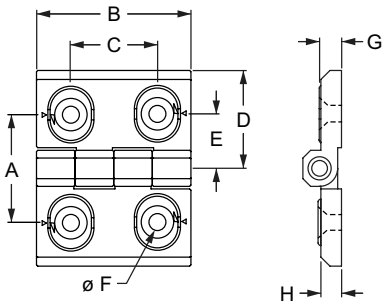

Part No.	Series	Orientation	Max Load	A	B	C	D	E	F	G	H	Weight
12068	15 40	Universal	300 Nm / 221 ft-Lbs.	42.00mm	60.00mm	34.00mm	38.00mm	21.15mm	6.50mm	8.50mm	8.00mm	.2082 kg
12069	15 40	Vertical		42.00mm	60.00mm	34.00mm	38.00mm	21.00mm	6.00mm	8.50mm	8.00mm	.2075 kg
12070	15 40	Horizontal		42.00mm	60.00mm	34.00mm	38.00mm	21.00mm	6.50mm	8.50mm	8.00mm	.2048 kg

Material Specifications

Material	Grade	Finish	Process
Zinc	Die-Cast	Black Powder Coated	Die-Casting

Suggested Hardware Per Leaf (Mount to T-Slot)

Part No.	Series	Qty.	Bolt	T-Nut
75-3628	15 40	2	M6 x 18mm FHSCS	Drop-In

Suggested Hardware Per Leaf (Mount to Panel ≤ .250" / 6mm)

Part No.	Series	Qty.	Bolt	Hex Nut	Washer
75-3589	15 40	2	M6 x 20mm FHSCS	Yes	Yes

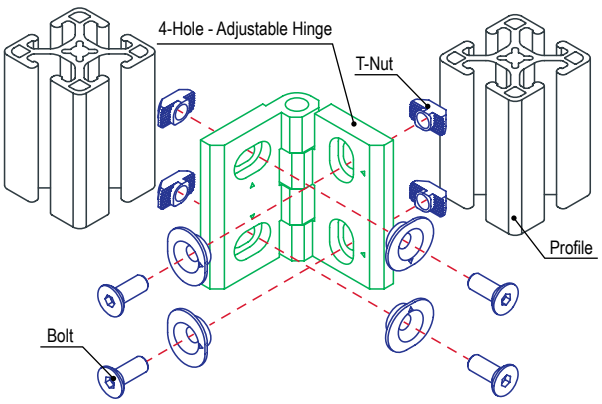

80/20 BUILD YOUR IDEA
More on 80/20® products available at 8020.net

4 Hole - Adjustable Tension Panel Hinge

- Adjustable pins for pivot tension when opening or closing an access point
- Not suitable for connecting multiple T-slot profiles

2081

2080

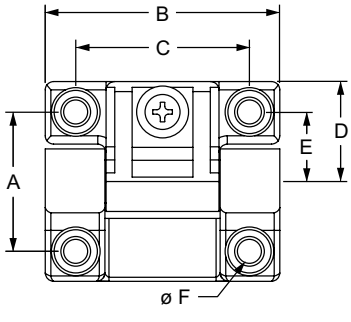

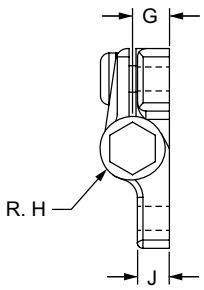

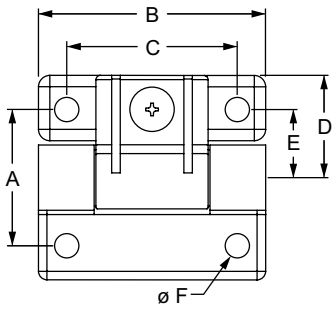

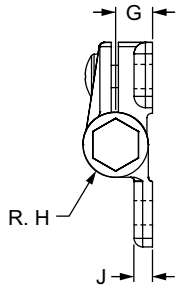

Part No.	Series	Material	Finish	Process	A	B	C	D	E	F	G	H	J	Weight
2081	10	Engineered Polymer	Matte Black	Injection Molded	1.000"	1.688"	1.250"	.719"	.500"	.197"	.266"	.234"	.230"	.031 lb
2080	15				1.500"	2.500"	1.875"	1.125"	.750"	.328"	.406"	.360"	.203"	.094 lb
25-2081	25				25.40mm	42.86mm	31.75mm	18.26mm	12.70mm	5.00mm	6.76mm	5.94mm	5.84mm	.0146 kg
40-2080	40				38.10mm	63.50mm	47.63mm	28.58mm	19.05mm	8.33mm	10.31mm	9.14mm	5.16mm	.0430 kg

Suggested Hardware Per Leaf (Mount to T-Slot)

Part No.	Series	Qty.	Bolt	T-Nut
3457	10	2	10-32 x 3/8 SHCS	Economy
3365	15	2	5/16-18 x 5/8 BHSCS	Economy
75-3401	25	2	M5 x 10mm SHCS	Economy
75-3422	40	2	M8 x 16mm BHSCS	Economy

Suggested Hardware Per Leaf (Mount to Panel ≤ .250" / 6mm)

Part No.	Series	Qty.	Bolt	Hex Nut	Washer
3459	10	2	10-32 x 5/8 SHCS	Yes	Yes
3442	15	2	5/16-18 x 3/4 BHSCS	Yes	Yes
75-3400	25	2	M5 x 16mm SHCS	Yes	Yes
75-3472	40	2	M8 x 20mm BHSCS	Yes	Yes

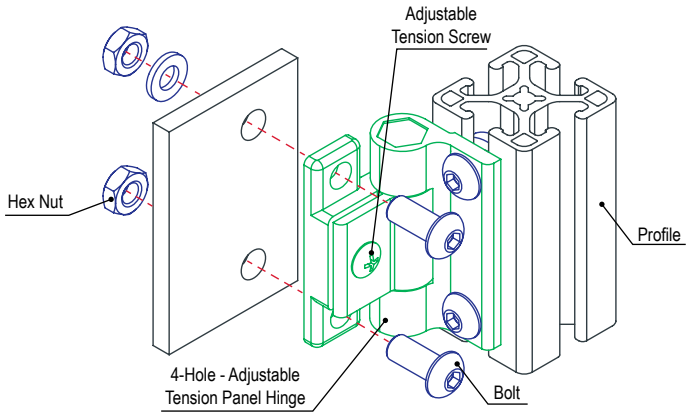

Panels & Doors

4 Hole - Detent Hinge

- Used to connect plastic panels and doors to T-slot profiles
- Holds doors open at 120 or 170 degrees
- Not suitable for connecting multiple T-slot profiles

10 & 25 Series

15 & 40 Series

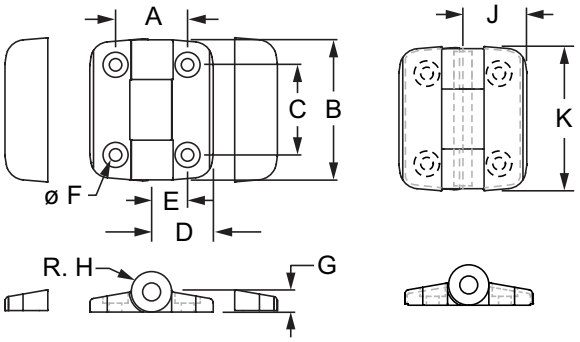

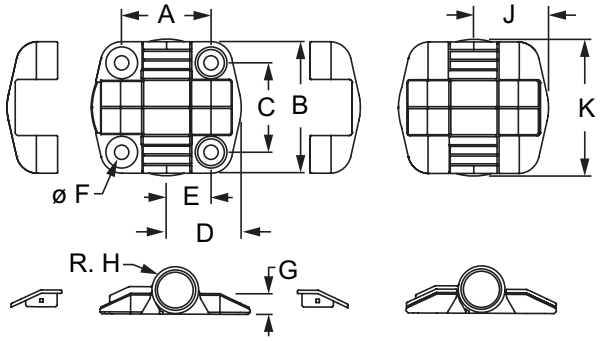

Part No.	Series	Color	A	B	C	D	E	F	G	H	J	K	Weight
2071	10	Black	1.000"	1.803"	1.252"	.791"	.492"	.177"	.283"	.264"	.839"	1.93"	.080 lb
2091	15	Black	1.339"	1.957"	1.339"	1.122"	.677"	.205"	.358"	.350"	1.122"	2.047"	.137 lb
25-2071	25	Black	25.40mm	45.80mm	31.80mm	20.10mm	12.50mm	4.50mm	7.20mm	6.70mm	21.30mm	49.00mm	.0362 kg
40-2091	40	Black	34.00mm	49.70mm	34.00mm	28.50mm	17.20mm	5.20mm	9.10mm	8.90mm	28.50mm	52.00mm	.0614 kg

Material Specifications for Hinge & Block

Material	Alloy	Finish	Process
Acetal/SS ball/Spring Detent	-	Plastic	Injection Molded
Aluminum	6005A – T61	Anodize	Extruded

Suggested Hardware Per Leaf (Mount to T-Slot)

Part No.	Series	Qty.	Bolt	T-Nut
3483	10	2	8-32 x 3/8 BHSCS	Economy
3487	15	2	10-32 x 1/2 BHSCS	Economy
75-3537	25	2	M4 x 10mm BHSCS	Economy
75-3583	40	2	M5 x 12mm BHSCS	Drop-in

Suggested Hardware Per Leaf (Mount to Panel ≤ .250" / 6mm)

Part No.	Series	Qty.	Bolt	Hex Nut	Washer
3489	10	2	8-32 x 1/2 BHSCS	Yes	Yes
3488	15	2	10-32 x 5/8 BHSCS	Yes	Yes
75-3538	25	2	M4 x 12mm BHSCS	Yes	Yes
75-3540	40	2	M5 x 16mm BHSCS	Yes	Yes

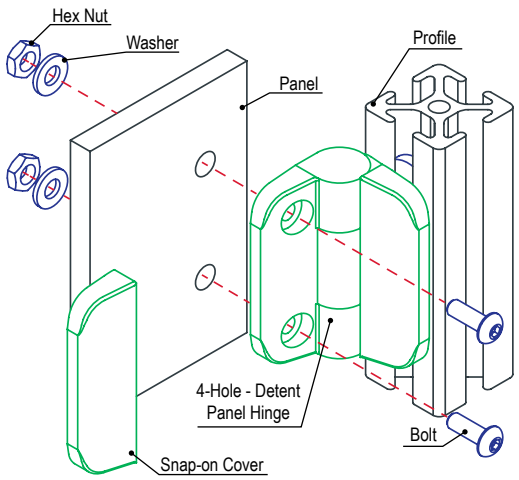

80/20 BUILD YOUR IDEA
More on 80/20® products available at 8020.net

4 Hole - Detent Positioning Hinge

- Used to connect plastic panels to profiles or two profiles together
- Holds doors closed, or open at 85 or 175 degrees

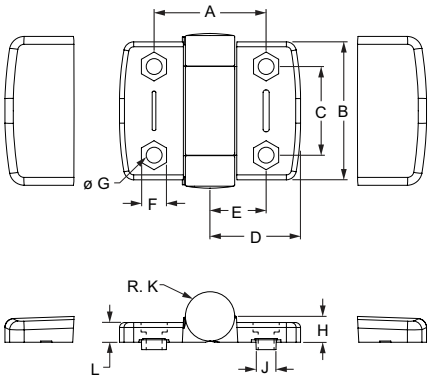

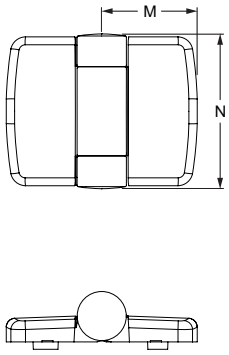

Part No.	Series	Max Load	A	B	C	D	E	F	G	H	J	K	L	M	N	Weight
12322	30	20 Nm / 14.7 Lbs.	35.50mm	56.00mm	36.00mm	27.00mm	17.75mm	10.20mm	6.40mm	10.50mm	—	10.00mm	8.00mm	27.50mm	62.80mm	.0735 kg
12326	15 40		45.50mm	56.00mm	36.00mm	36.75mm	22.75mm	10.20mm	6.40mm	10.50mm	—	10.00mm	8.00mm	38.75mm	62.80mm	.0838 kg
12327	15 40		45.50mm	56.00mm	36.00mm	36.75mm	22.75mm	10.20mm	6.40mm	10.50mm	8.00mm	10.00mm	8.00mm	38.75mm	62.80mm	.0845 kg

Material Specifications

Material	Grade	Process	Color
Nylon PA Glass Fiber Reinforced	PA6GF30	Injection Molded	Black

Suggested Hardware Per Leaf (Mount to T-Slot)

Part No.	Series	Qty.	Bolt	T-Nut
3418	15	2	1/4-20 x 5/8 BHSCS	Economy
75-3599	30	2	M6 x 10mm BHSCS	Drop-in
75-3622	40	2	M6 x 14mm BHSCS	Drop-in

Suggested Hardware Per Leaf (Mount to Panel ≤ .250" / 6mm)

Part No.	Series	Qty.	Bolt	Hex Nut	Washer
3469	15	2	1/4-20 x 3/4 BHSCS	Yes	Yes
75-3603	30	2	M6 x 14mm BHSCS	Yes	No
75-3605	40	2	M6 x 18mm BHSCS	Yes	Yes

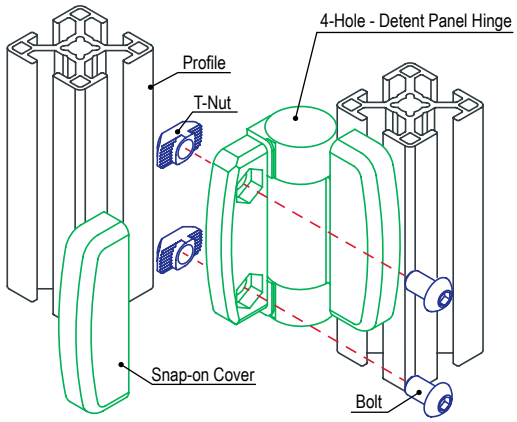

Panels & Doors

4 Hole - Constant Friction Hinge

- Used to connect plastic panels and doors to T-slot profiles
- Holds doors open constant friction
- Useful for vertical-lifting small doors providing hands-free access

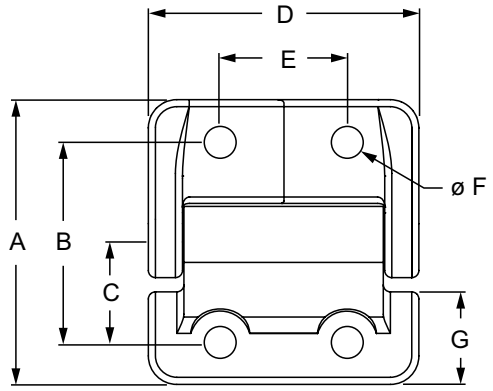

Part No.	Series	Material	Color	A	B	C	D	E	F	G	H	J	Weight
12080	10 25	Aluminum	Black	40.00mm	28.00mm	14.00mm	38.00mm	17.80mm	4.50mm	13.00mm	10.00mm	3.00mm	.0883 kg

Suggested Hardware Per Leaf (Mount to T-Slot)

Part No.	Series	Qty.	Bolt	Nut Type
75-3556	10 25	2	M4 x 10mm SHCS	Drop-In T-Nut

Suggested Hardware Per Leaf (Mount to Panel ≤ .250" / 6mm)

Part No.	Series	Qty.	Bolt	Nut Type	Washer
75-3558	10 25	2	M4 x 16mm SHCS	Hex Nut	11-6039

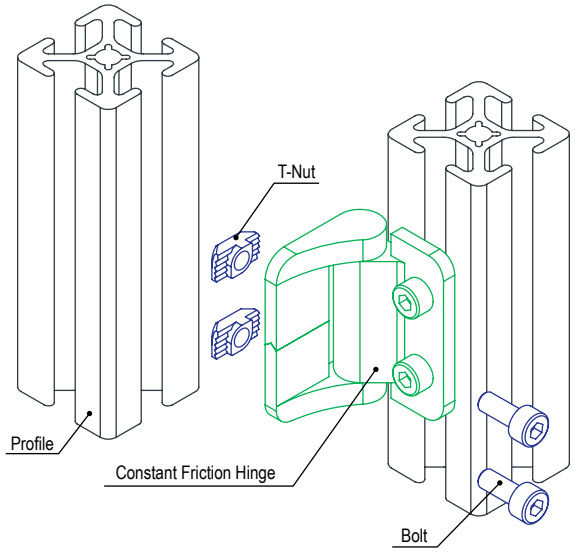

80/20 BUILD YOUR IDEA
More on 80/20® products available at 8020.net

4 Hole - Aluminum Hinge

- Used to mount lighter weight doors or two profiles
- Useful for outdoor applications
- Options available as transitions from 10 to 15 series or 25 to 40 series profiles

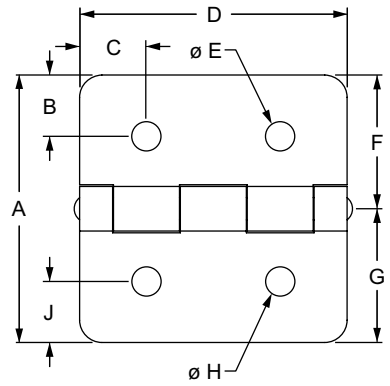

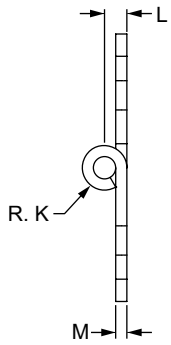

Part No.	Series	Color	Max Load	A	B	C	D	E	F	G	H	J	K	L	M	Weight
2086	10	Clear	40 lb	2.000"	.469"	.500"	2.000"	.257"	1.000"	1.000"	.257"	.469"	.167"	.167"	.078"	.040 lb
2086-Black	10	Black	40 lb	2.000"	.469"	.500"	2.000"	.257"	1.000"	1.000"	.257"	.469"	.167"	.167"	.078"	.040 lb
2085	15 RT	Clear	70 lb	3.000"	.686"	.750"	3.000"	.328"	1.500"	1.500"	.328"	.686"	.250"	.250"	.125"	.135 lb
2085-Black	15 RT	Black	70 lb	3.000"	.686"	.750"	3.000"	.328"	1.500"	1.500"	.328"	.686"	.250"	.250"	.125"	.135 lb
2084	10 to 15	Clear	75 lb	2.500"	.375"	.750"	3.000"	.257"	1.000"	1.500"	.328"	.750"	.250"	.250"	.125"	.118 lb
2084-Black	10 to 15	Black	75 lb	2.500"	.375"	.750"	3.000"	.257"	1.000"	1.500"	.328"	.750"	.250"	.250"	.125"	.118 lb
25-2086	25	Clear	18 kg	50.80mm	11.91mm	12.70mm	50.80mm	6.53mm	25.40mm	25.40mm	6.53mm	11.91mm	4.23mm	4.23mm	1.98mm	.0236 kg
25-2086-Black	25	Black	18 kg	50.80mm	11.91mm	12.70mm	50.80mm	6.53mm	25.40mm	25.40mm	6.53mm	11.91mm	4.23mm	4.23mm	1.98mm	.0236 kg
40-2085	40	Clear	34 kg	76.20mm	17.42mm	19.05mm	76.20mm	8.33mm	38.10mm	38.10mm	8.33mm	17.42mm	6.35mm	6.35mm	3.18mm	.0640 kg
40-2085-Black	40	Black	34 kg	76.20mm	17.42mm	19.05mm	76.20mm	8.33mm	38.10mm	38.10mm	8.33mm	17.42mm	6.35mm	6.35mm	3.18mm	.0640 kg
65-2084	25 to 40	Clear	34 kg	63.50mm	9.53mm	19.05mm	76.20mm	6.53mm	25.40mm	38.10mm	8.33mm	19.05mm	6.35mm	6.35mm	3.18mm	.0542 kg
65-2084-Black	25 to 40	Black	34 kg	63.50mm	9.53mm	19.05mm	76.20mm	6.53mm	25.40mm	38.10mm	8.33mm	19.05mm	6.35mm	6.35mm	3.18mm	.0542 kg

*The gap distance between profiles for 10 series is .062", 15 series is .120", 25 series is 1.97mm, 40 series is 1.15mm and for series transitions is .125" (2.42mm).

Material Specifications

Material	Leaf Alloy	Pin Alloy	Finish	Process
Aluminum	5052-H32/34	6061-T6	Anodize	Die Stamping

Suggested Hardware (Mount to T-Slot)

Part No.		Series	Qty.	Bolt	Nut Type	Washer
3386		10	4	1/4-20 x 3/8 FBHSCS	Economy T-Nut	—
3319		15	4	5/16-18 x 1/2 FBHSCS	Economy T-Nut	—
3386		10 to 15	2	1/4-20 x 3/8 FBHSCS	Economy T-Nut	—
3319		10 to 15	2	5/16-18 x 1/2 FBHSCS	Economy T-Nut	—
75-3515		25	4	M6 x 10mm BHSCS	Economy T-Nut	—
75-3525		40	4	M8 x 12mm BHSCS	Economy T-Nut	—
75-3515		25 to 40	2	M6 x 10mm BHSCS	Economy T-Nut	—
75-3525		25 to 40	2	M8 x 12mm BHSCS	Economy T-Nut	—
3961	OR	RT	4	5/16-18 x 2.000" BHSCS	Flanged Hex Nut	3760
3964		RT	4	M8 X 50mm BHSCS	Flanged Hex Nut	3860

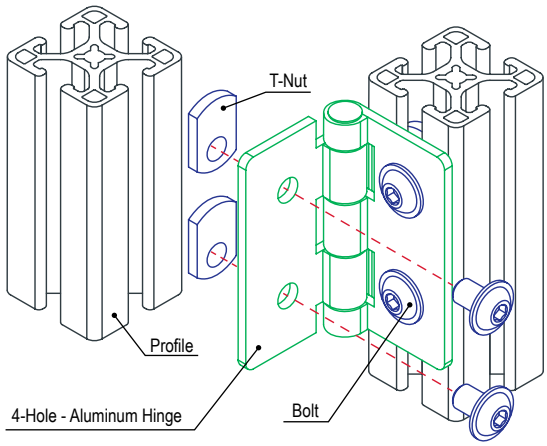

Panels & Doors

2 Hole - Standard Plastic Hinge

- Used to connect plastic panels and doors to T-slot profiles

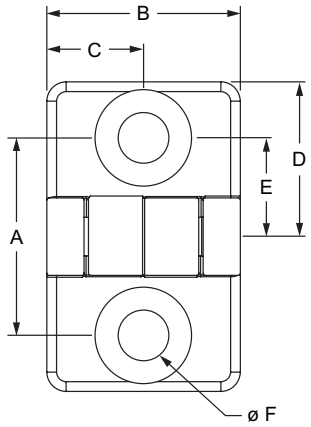

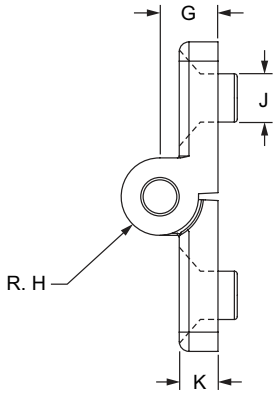

Part No.	Series	Max Load	A	B	C	D	E	F	G	H	J	K	Weight
12074	20	10 Nm / 7.3 ft-Lbs.	20.40mm	20.00mm	10.00mm	16.00mm	10.20mm	5.20mm	6.00mm	4.00mm	—	4.00mm	.0063 kg
12075	20		20.40mm	20.00mm	10.00mm	16.00mm	10.20mm	5.20mm	6.00mm	4.00mm	5.00mm	4.00mm	.0063 kg
12252	45		50.00mm	40.00mm	20.00mm	45.00mm	25.00mm	6.50mm	9.00mm	8.00mm	10.00mm	8.50mm	.0471 kg

Material Specifications

Part No.	Material	Grade	Color	Process
12074	Nylon PA Glass Fiber Reinforced	PA6GF30	Black	Injection Molding
12075			Black	
12252			Black/Bolt Plain	

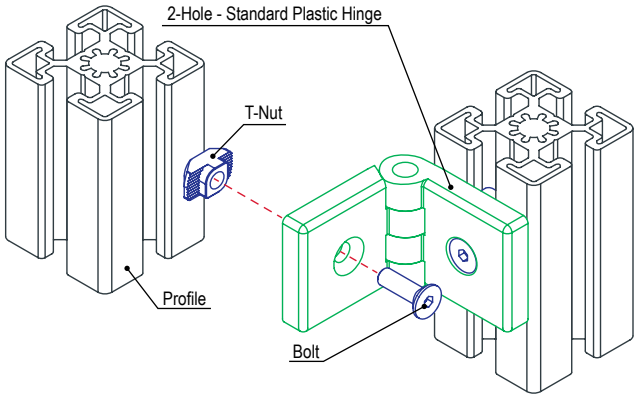

Suggested Hardware Per Leaf (Mount to T-Slot)

Part No.	Series	Qty.	Bolt	T-Nut
75-3571	20	1	M5 x 8mm FHSCS	Economy
75-3588	45	1	M6 x 20mm FHSCS	Drop-in

Suggested Hardware Per Leaf (Mount to Panel ≤ .250" / 6mm)

Part No.	Series	Qty.	Bolt	Hex Nut	Washer
75-3573	20	1	M5 x 14mm FHSCS	Yes	Yes
75-3589	45	1	M6 x 20mm FHSCS	Yes	Yes

80/20 BUILD YOUR IDEA
More on 80/20® products available at 8020.net

4 Hole - Standard Plastic Hinge

- Used to connect plastic panels and doors to T-slot profiles

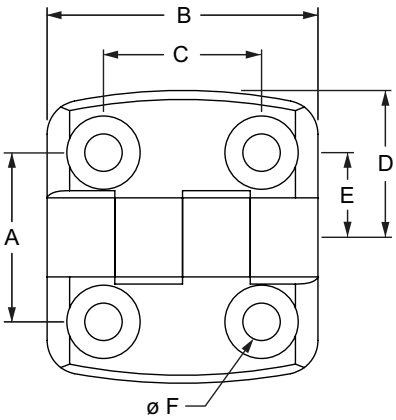

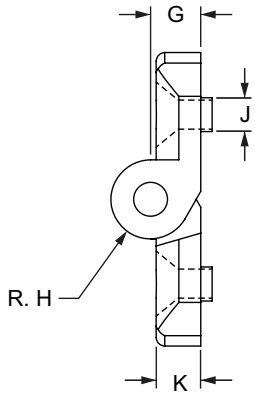

Part No.	Series	Material	Color	Process	Max Load	A	B	C	D	E	F	G	H	J	K	Weight
12067	20	Nylon PA Glass Fiber Reinforced	Black	Injection Molding	30 Nm / 22 ft-Lbs.	23.00mm	30.00mm	14.00mm	19.50mm	11.50mm	4.50mm	5.50mm	4.00mm	—	5.00mm	.0077 kg
12098	10 25					30.00mm	48.00mm	28.00mm	26.00mm	15.00mm	6.60mm	8.95mm	7.00mm	—	7.40mm	.0336 kg
12099	10 25					30.00mm	48.00mm	28.00mm	26.00mm	15.00mm	6.60mm	8.90mm	7.00mm	6.00mm	7.90mm	.0321 kg
12107	30					35.00mm	48.00mm	28.00mm	29.50mm	17.50mm	6.60mm	8.90mm	7.00mm	—	8.40mm	.0353 kg
12108	30					35.00mm	48.00mm	28.00mm	29.50mm	17.50mm	6.60mm	8.90mm	7.00mm	7.76mm	8.20mm	.0336 kg
12116	15				25 ft-Lbs.	40.00mm	48.00mm	28.00mm	35.50mm	20.00mm	6.40mm	9.00mm	7.00mm	—	8.00mm	.0392 kg
12117	15					40.00mm	48.00mm	28.00mm	35.50mm	20.00mm	6.60mm	8.90mm	7.00mm	8.00mm	7.90mm	.0396 kg
12125	15 40				40 Nm / 30 ft-Lbs.	45.00mm	48.00mm	28.00mm	38.50mm	22.50mm	6.60mm	8.90mm	7.00mm	—	7.40mm	.0404 kg
12126	15 40					45.00mm	48.00mm	28.00mm	38.50mm	22.50mm	6.60mm	8.90mm	7.00mm	7.76mm	7.90mm	.0404 kg
12134	45				40 Nm / 29 ft-Lbs.	50.00mm	48.00mm	28.00mm	43.50mm	25.00mm	6.60mm	8.90mm	7.00mm	—	7.70mm	.0467 kg
12136	45					50.00mm	48.00mm	28.00mm	43.50mm	25.00mm	6.60mm	8.90mm	7.00mm	9.72mm	7.90mm	.0467 kg

*The gap distance between profiles is .075" (1.90mm)

Suggested Hardware Per Leaf (Mount to T-Slot)

Part No.	Series	Qty.	Bolt	T-Nut
3419	10	2	1/4-20 x 1/2 FHSCS	Economy
3409	15	2	1/4-20 x 5/8 FHSCS	Drop-in
75-3552	20	2	M4 x 10mm FHSCS	Economy
75-3616	25	2	M6 x 14mm FHSCS	Economy
75-3585	30	2	M6 x 14mm FHSCS	Drop-in
75-3628	40	2	M6 x 18mm FHSCS	Drop-in
75-3587	45	2	M6 x 18mm FHSCS	Drop-in

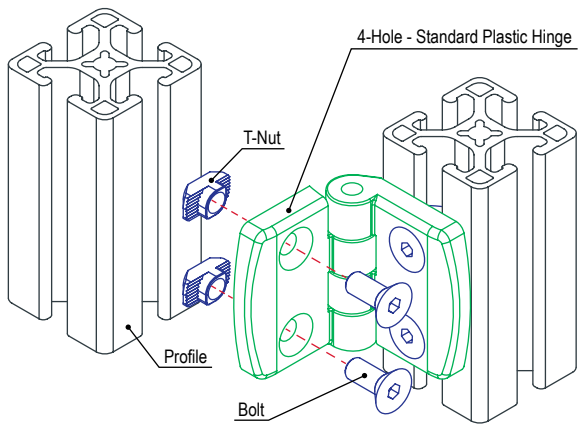

Suggested Hardware Per Leaf (Mount to Panel ≤ .250" / 6mm)

Part No.	Series	Qty.	Bolt	Hex Nut	Washer
3417	10 15	2	1/4-20 x 3/4 FHSCS	Yes	Yes
75-3562	20	2	M4 x 12mm FHSCS	Yes	Yes
75-3589	25 30 40 45	2	M6 x 20mm FHSCS	Yes	Yes

Panels & Doors

4 Hole - Horizontal Adjustment Plastic Hinge

- Used to connect plastic panels and doors to T-slot profiles
- Horizontally slotted holes to support adjustments

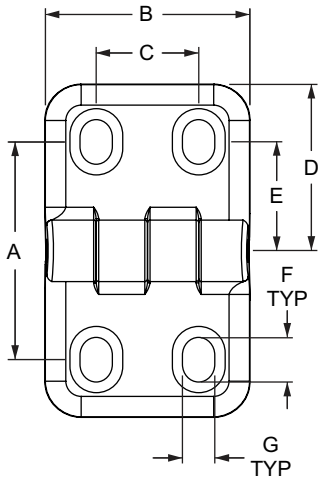

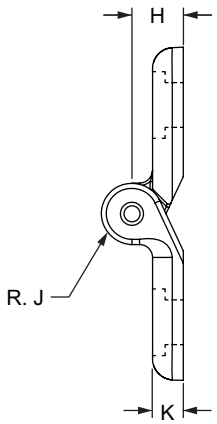

Part No.	Series	Max Load	A	B	C	D	E	F	G	H	J	K	Weight
12254	15 40	17 Nm / 12.5 ft-Lbs.	42.50mm	40.00mm	20.00mm	32.50mm	21.25mm	8.70mm	6.20mm	10.00mm	6.00mm	6.00mm	.0232 kg

Material Specifications

Material	Grade	Color	Process
Nylon PA Glass Fiber Reinforced	PA6GF30	Black/Bolt Plain	Injection Molding

Suggested Hardware Per Leaf (Mount to T-Slot)

Part No.	Series	Qty.	Bolt	T-Nut
3418	15	2	1/4-20 x 5/8 BHSCS	Economy
75-3622	40	2	M6 x 14mm BHSCS	Drop-in

Suggested Hardware Per Leaf (Mount to Panel ≤ .250" / 6mm)

Part No.	Series	Qty.	Bolt	Hex Nut	Washer
3469	15	2	1/4-20 x 3/4 BHSCS	Yes	Yes
75-3605	40	2	M6 x 18mm BHSCS	Yes	Yes

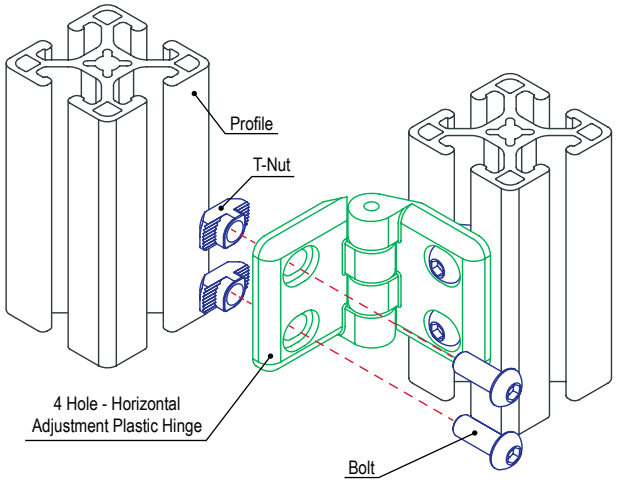

80/20 BUILD YOUR IDEA
More on 80/20® products available at 8020.net

4 Hole - Standard Plastic Hinge with Snap Cover

- Used to connect plastic panels and doors to T-slot profiles

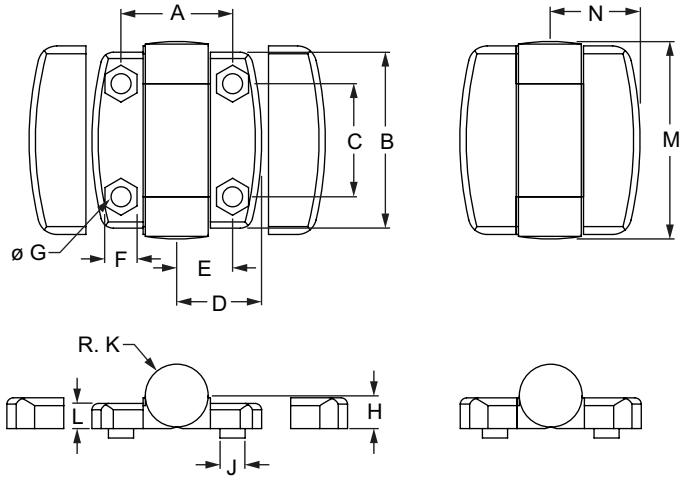

Part No.	Series	Max Load	A	B	C	D	E	F	G	H	J	K	L	M	N	Weight
12162	30	20 Nm / 14.7 ft-Lbs.	35.50mm	56.00mm	36.00mm	27.00mm	17.75mm	10.20mm	6.40mm	10.50mm	—	20.00mm	8.00mm	62.80mm	28.80mm	.0327 kg
12165	15 40		45.50mm	56.00mm	36.00mm	36.75mm	22.75mm	10.20mm	6.40mm	10.50mm	—	20.00mm	8.00mm	62.80mm	38.60mm	.0549 kg

Material Specifications

Material	Grade	Color	Process
Nylon PA Glass Fiber Reinforced	PA6GF30	Black	Injection Molding

Suggested Hardware Per Leaf (Mount to T-Slot)

Part No.	Series	Qty.	Bolt	T-Nut
3418	15	2	1/4-20 x 5/8 BHSCS	Economy
75-3599	30	2	M6 x 10mm BHSCS	Drop-in
75-3622	40	2	M6 x 14mm BHSCS	Drop-in

Suggested Hardware Per Leaf (Mount to Panel ≤ .250" / 6mm)

Part No.	Series	Qty.	Bolt	Hex Nut	Washer
3469	15	2	1/4-20 x 3/4 BHSCS	Yes	Yes
75-3603	30	2	M6 x 14mm BHSCS	Yes	No
75-3605	40	2	M6 x 18mm BHSCS	Yes	Yes

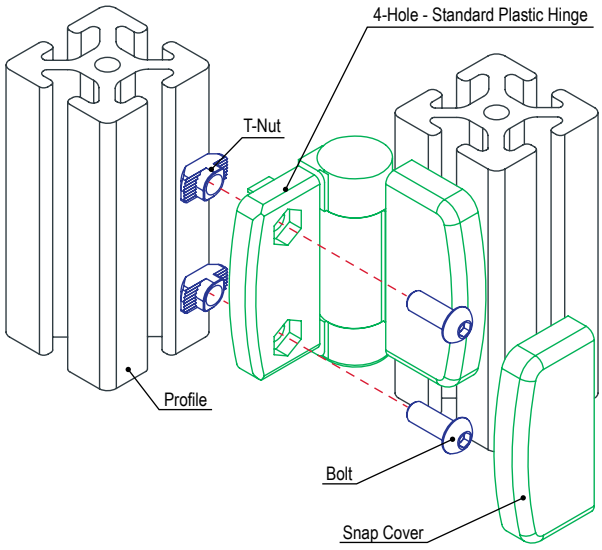

Panels & Doors

4 Hole - Economy Zinc Hinge

- Higher strength hinge used to connect plastic panels and doors to T-slot profiles

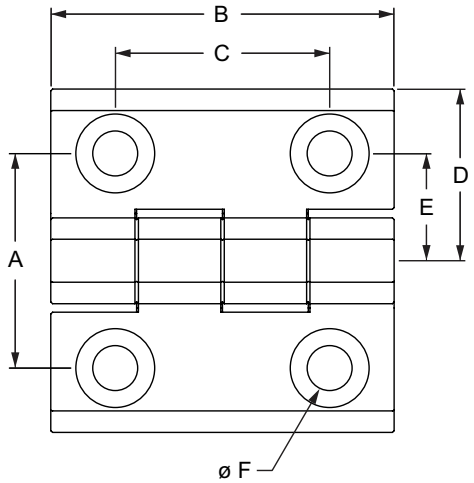

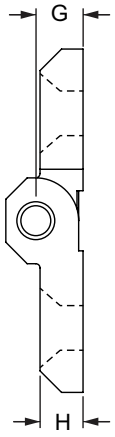

Part No.	Series	Max Load	A	B	C	D	E	F	G	H	Weight
12255	20	50 Nm / 36.8 ft-Lbs.	25.00mm	40.00mm	25.00mm	20.00mm	12.50mm	5.20mm	5.50mm	5.00mm	.0465 kg
12256	10 25	50 Nm / 36.8 ft-Lbs.	30.00mm	50.00mm	30.00mm	25.00mm	15.00mm	6.30mm	6.50mm	6.00mm	.0920 kg
12062	30	60 Nm / 44.0 ft-Lbs.	36.00mm	60.00mm	36.00mm	30.00mm	18.00mm	8.30mm	8.00mm	8.00mm	.1153 kg

Material Specifications

Material	Grade	Finish	Process
Zinc	Die-Cast	Black Powder Coat	Die-Casting

Suggested Hardware Per Leaf (Mount to T-Slot)

Part No.	Series	Qty.	Bolt	T-Nut
3414	10	2	1/4-20 x 1/2 FHSCS	Economy
75-3572	20	2	M5 x 10mm FHSCS	Economy
75-3584	25	2	M6 x 14mm FHSCS	Slide-in
75-3585	30	2	M6 x 14mm FHSCS	Drop-in

Suggested Hardware Per Leaf (Mount to Panel ≤ .250" / 6mm)

Part No.	Series	Qty.	Bolt	Hex Nut	Washer
11-5716	20	2	M5 x 16mm FHSCS	11-5065	11-6040
11-6718	10 25	2	M6 x 18mm FHSCS	11-6065	11-6041
11-8716	30	2	M8 x 18mm FHSCS	11-8065	11-6042

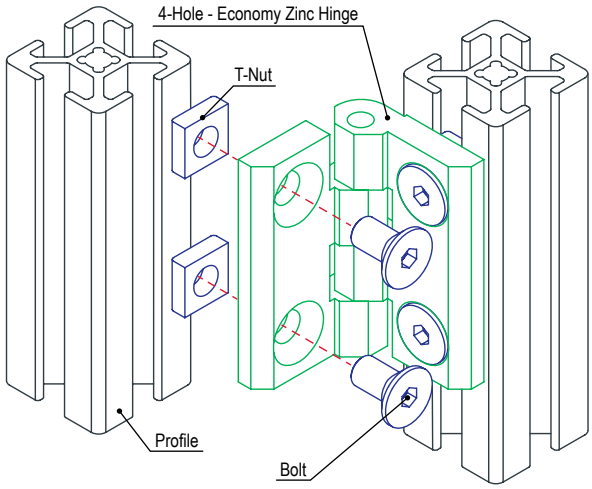

80/20 BUILD YOUR IDEA
More on 80/20® products available at 8020.net

4 Hole - Transition Hinge

- Used to mount larger doors or two profiles
- Serves as a transition from 30 to 45 series profiles

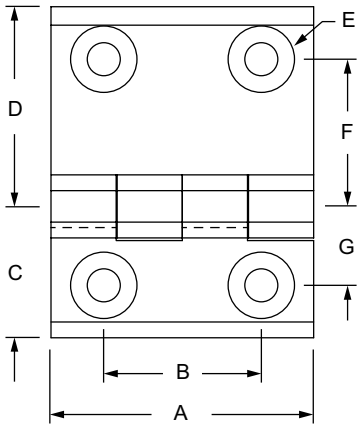

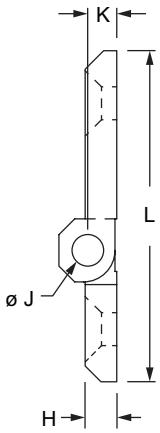

Part No.	Series	Max Load	A	B	C	D	E	F	G	H	J	K	L	Weight
12064	30 to 45	60 Nm /	50.00mm	30.00mm	25.00mm	38.00mm	M6 FHSCS	28.00mm	15.00mm	6.00mm	6.00mm	6.00mm	63.00mm	.1049 kg
12065		44 ft-Lbs.	50.00mm	30.00mm	25.00mm	38.00mm	M6 FHSCS	28.00mm	15.00mm	6.00mm	6.00mm	6.00mm	63.00mm	.1283 kg

Material Specifications

Part No.	Material	Grade	Finish	Process
12064	Zinc	Zn Al Cu 1	Black Powder Coat	Die-Casting
12065	Stainless-Steel	316	Stainless	Die-Casting

Suggested Hardware Per Leaf (Mount to T-Slot)

Part No.	Series	Qty.	Bolt	T-Nut
75-3585	30 AND 45	2	M6 x 14mm FHSCS	Drop-In
75-3587		2	M6 x 18mm FHSCS	Drop-In

Suggested Hardware Per Leaf (Mount to Panel ≤ .250" / 6mm)

Part No.	Series	Qty.	Bolt	Hex Nut	Washer
11-6718	30 45	2	M6 x 18mm FHSCS	11-6065	11-6041

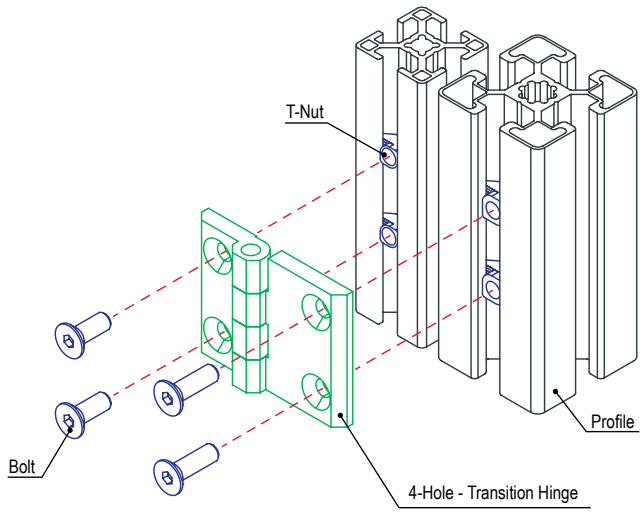

Panels & Doors

4 Hole - Standard Stainless Steel Hinge

- Higher strength hinge used to connect plastic panels and doors to T-slot profiles

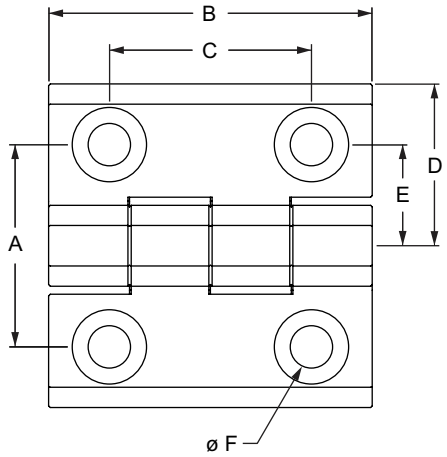

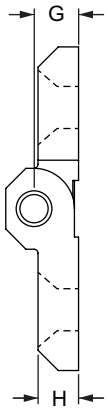

Part No.	Series	Max Load	A	B	C	D	E	F	G	H	Weight
12093	20	50 Nm / 36.8 ft-Lbs.	25.00mm	40.00mm	25.00mm	20.00mm	12.50mm	5.20mm	5.50mm	5.00mm	.0539 kg
12094	10 25	50 Nm / 36.8 ft-Lbs.	30.00mm	50.00mm	30.00mm	25.00mm	15.00mm	6.30mm	6.50mm	6.00mm	.0970 kg
12096	30	60 Nm / 44.0 ft-Lbs.	36.00mm	60.00mm	36.00mm	30.00mm	18.00mm	8.30mm	8.00mm	8.00mm	.0952 kg

Material Specifications

Material	Finish	Process
Stainless-Steel	Stainless	Machined

Suggested Hardware Per Leaf (Mount to T-Slot)

Part No.	Series	Qty.	Bolt	T-Nut
3639	10	2	1/4-20 x 1/2 FHSCS	Standard
75-3572	20	2	M5 x 10mm FHSCS	Economy
75-3639	25	2	M6 x 12mm FHSCS	Standard
75-3585	30	2	M6 x 14mm FHSCS	Drop-in

Suggested Hardware Per Leaf (Mount to Panel ≤ .250" / 6mm)

Part No.	Series	Qty.	Bolt	Hex Nut	Washer
11-5716	20	2	M5 x 16mm FHSCS	11-5065	11-6040
11-6718	10 25	2	M6 x 18mm FHSCS	11-6065	11-6041
11-8720	30	2	M8 x 20mm FHSCS	11-8065	11-6042

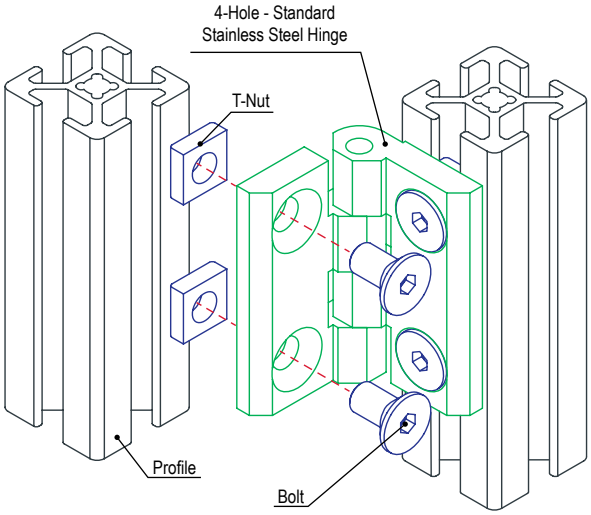

80/20 BUILD YOUR IDEA
More on 80/20® products available at 8020.net

4 Hole - Zinc Hinge

- Higher strength hinge used to connect plastic panels and doors to T-slot profiles

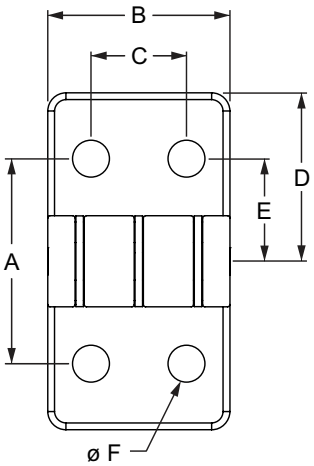

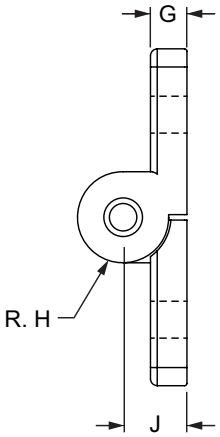

Part No.	Series	A	B	C	D	E	F	G	H	J	Weight
4489	15	1.771"	1.574"	.826"	1.457"	.885"	.323"	.314"	.393"	.551"	.426 lb
40-4489	40	45.00mm	40.00mm	21.00mm	37.00mm	22.50mm	8.20mm	8.00mm	10.00mm	14.00mm	.1940 kg

Material Specifications

Material	Grade	Finish	Process
Zinc	Die-Cast	Black Powder Coat	Die-Casting

Suggested Hardware Per Leaf (Mount to T-Slot)

Series	Part No.	Qty.	Bolt	Part No.	Qty.	T-Nut
15	3114	2	5/16-18 x 3/4 BHSCS	3203	2	Standard
40	11-8518	2	M8 x 18mm SHCS	40-1984	2	Standard

Suggested Hardware Per Leaf (Mount to Panel ≤ .250" / 6mm)

Part No.	Series	Qty.	Bolt	Hex Nut	Washer
3117	15	2	5/16-18 x 7/8 BHSCS	3214	3260
11-8320	40	2	M8 x 20mm BHSCS	11-8065	11-6042

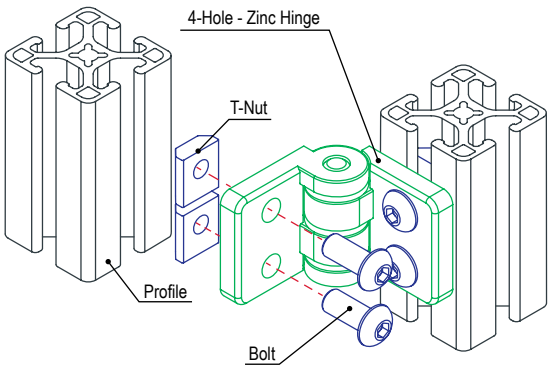

Panels & Doors

4 Hole - Locking Zinc Hinge

- Higher strength hinge used to connect plastic panels and doors to T-slot profiles
- Features ratcheting clamp handle for locking hinge in position

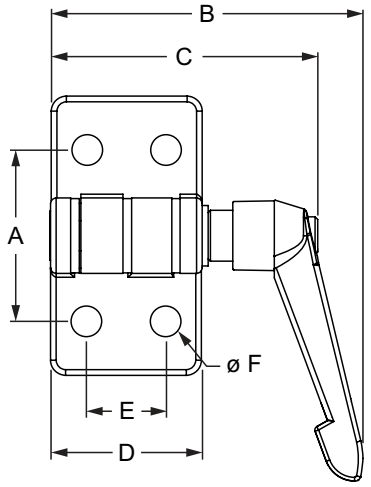

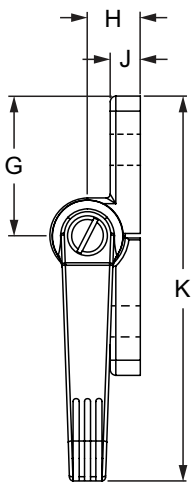

Part No.	Series	A	B	C	D	E	F	G	H	J	K	Weight
4488	15	1.771"	3.252"	2.780"	1.574"	.827"	.323"	1.457"	.551"	.315"	4.016"	.499 lb
40-4488	40	45.40mm	82.60mm	70.60mm	40.00mm	21.00mm	8.20mm	37.00mm	14.00mm	8.00mm	102.00mm	.2280 kg

Material Specifications

Material	Grade	Finish	Process
Zinc	Die-Cast	Black Powder Coat	Die-Casting

Suggested Hardware Per Leaf (Mount to T-Slot)

Series	Part No.	Qty.	Bolt	Part No.	Qty.	T-Nut
15	3114	2	5/16-18 x 3/4 BHSCS	3203	2	Standard
40	11-8518	2	M8 x 18mm SHCS	40-1984	2	Standard

Suggested Hardware Per Leaf (Mount to Panel ≤ .250" / 6mm)

Part No.	Series	Qty.	Bolt	Hex Nut	Washer
3117	15	2	5/16-18 x 7/8 BHSCS	3214	3260
11-8320	40	2	M8 x 20mm BHSCS	11-8065	11-6042

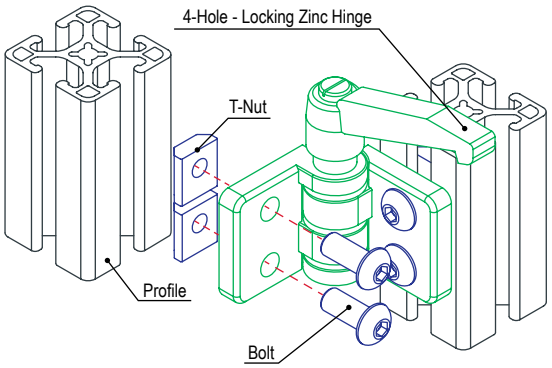

80/20 BUILD YOUR IDEA
More on 80/20® products available at 8020.net

4 Hole - Slotted Zinc Hinge

- Higher strength hinge used to connect plastic panels and doors to T-slot profiles
- Slotted holes to support adjustments; options available with slot tabs

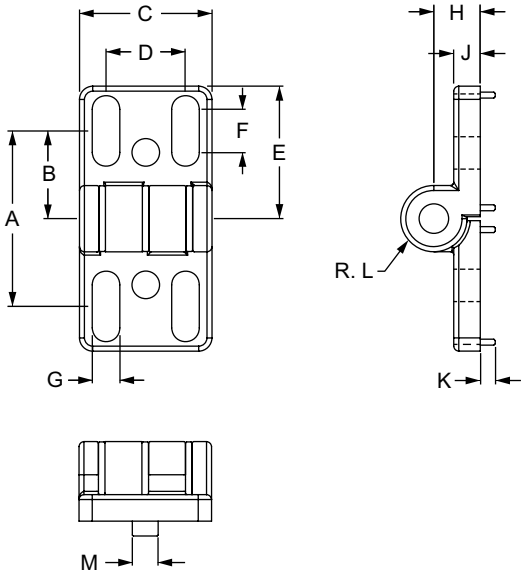

Part No.	Series	Max Load	A	B	C	D	E	F	G	H	J	K	L	M	Weight
12084	15 40 45	250 Nm / 184 ft-Lbs.	53.00mm	26.50mm	40.00mm	24.00mm	40.00mm	13.00mm	8.30mm	14.00mm	8.00mm	—	10.00mm	—	.1816 kg
12088	15 40		53.00mm	26.50mm	40.00mm	24.00mm	40.00mm	13.00mm	8.30mm	14.00mm	8.00mm	4.50mm	10.00mm	7.80mm	.1679 kg
12089	45		53.00mm	26.50mm	40.00mm	24.00mm	40.00mm	13.00mm	8.30mm	14.00mm	8.00mm	4.50mm	10.00mm	9.80mm	.1866 kg

Material Specifications

Material	Grade	Finish	Process
Zinc	Die-Cast	Black Powder Coat	Die-Casting

Suggested Hardware Per Leaf (Mount to T-Slot)

Part No.	Series	Qty.	Bolt	T-Nut
3455	15	2	5/16-18 x 3/4 SHCS	Economy
75-3627	40	2	M8 x 18mm SHCS	Slide-in
75-3630	45	2	M8 x 20mm SHCS	Drop-in

Suggested Hardware Per Leaf (Mount to Panel ≤ .250" / 6mm)

Part No.	Series	Qty.	Bolt	Hex Nut	Washer
3117	15	2	5/16-18 x 7/8 BHSCS	3214	3260
11-8320	40 45	2	M8 x 20mm BHSCS	11-8065	11-6042

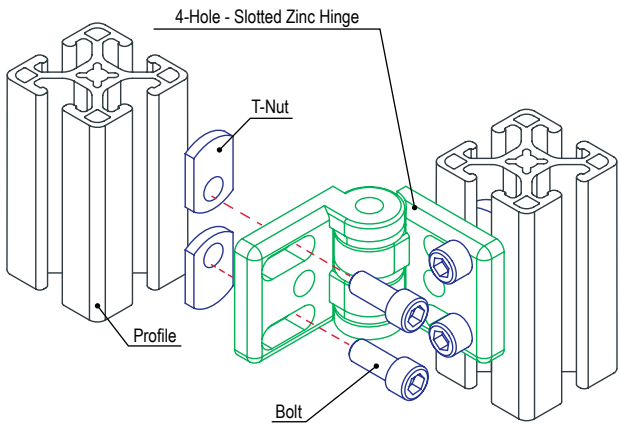

Panels & Doors

4 Hole - Slotted Locking Zinc Hinge

- Higher strength hinge used to connect plastic panels and doors to T-slot profiles
- Ratcheting clamp handle for locking hinge in position; Slotted holes to support adjustments; available with slot tabs

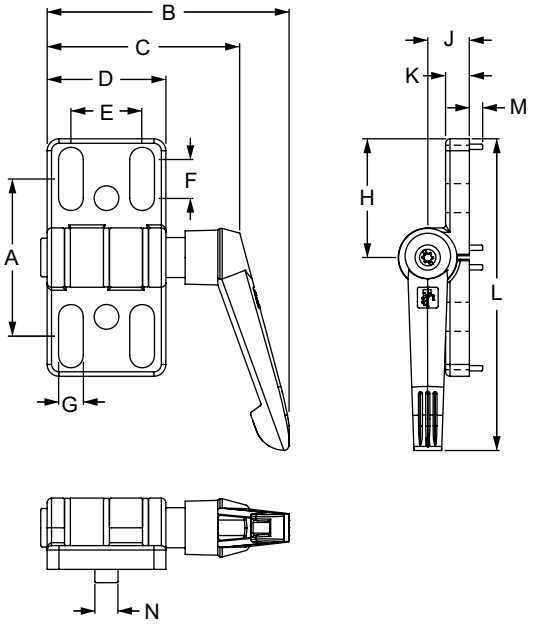

Part No.	Series	Max Load	A	B	C	D	E	F	G	H	J	K	L	M	N	Weight
12085	15 40 45	250 Nm / 184 ft-Lbs.	53.00mm	81.00mm	69.00mm	40.00mm	24.00mm	13.00mm	8.30mm	40.00mm	14.00mm	8.00mm	105.00mm	—	—	.2155 kg
12086	15 40		53.00mm	81.60mm	65.00mm	40.00mm	24.00mm	13.00mm	8.30mm	40.00mm	14.00mm	8.00mm	105.00mm	4.50mm	7.80mm	.2132 kg
12087	45		53.00mm	81.00mm	69.00mm	40.00mm	24.00mm	13.00mm	8.30mm	40.00mm	14.00mm	8.00mm	105.00mm	4.50mm	10.00mm	.2092 kg

Material Specifications

Material	Grade	Finish	Process
Zinc	Die-Cast	Black Powder Coat	Die-Casting

Suggested Hardware Per Leaf (Mount to T-Slot)

Part No.	Series	Qty.	Bolt	T-Nut
3455	15	2	5/16-18 x 3/4 SHCS	Economy
75-3627	40	2	M8 x 18mm SHCS	Slide-in
75-3630	45	2	M8 x 20mm SHCS	Drop-in

Suggested Hardware Per Leaf (Mount to Panel ≤ .250" / 6mm)

Part No.	Series	Qty.	Bolt	Hex Nut	Washer
3117	15	2	5/16-18 x 7/8 BHSCS	3214	3260
11-8320	40 45	2	M8 x 20mm BHSCS	11-8065	11-6042

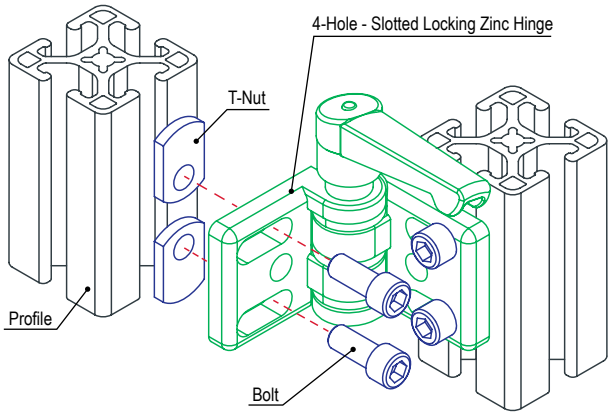

80/20 BUILD YOUR IDEA
More on 80/20® products available at 8020.net

Lite Panel Hinge

- Used to mount plastic panel doors and lightweight T-slot profiles
- Slotted holes allow for greater adjustability; includes bolt assembly to mount to a .250” (6mm) panel

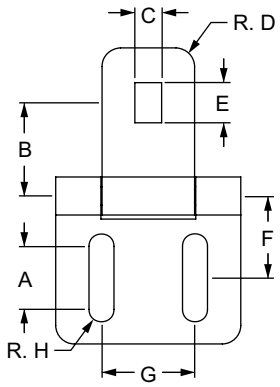

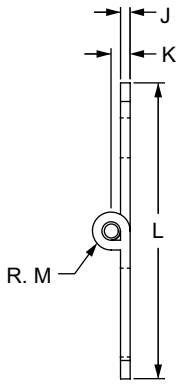

Part No.	Series	Max Load	A	B	C	D	E	F	G	H	J	K	L	M	Weight
12097	15 40	25 Nm / 18.0 ft-Lbs.	13.60mm	20.15mm	6.80mm	4.00mm	8.70mm	17.70mm	20.20mm	2.70mm	4.10mm	2.10mm	64.00mm	4.10mm	.0526 kg

Material Specifications

Material	Grade	Finish	Process
Steel	Die-Cast	Black Powder Coat	Die-Casting

Included Hardware (Mount to Panel ≤ .250” / 6mm)

Series	Qty.	Bolt	Qty.	T-Nut	Qty.	Washer
15 40	1	M5 Screw	1	M5 Hex Nut	1	M5 Washer

Suggested Hardware (Mount to T-Slot)

Part No.	Series	Qty.	Bolt	T-Nut
3487	15	2	10-32 x 1/2 BHSCS	Slide-in
75-3583	40	2	M5 x 12mm BHSCS	Drop-in

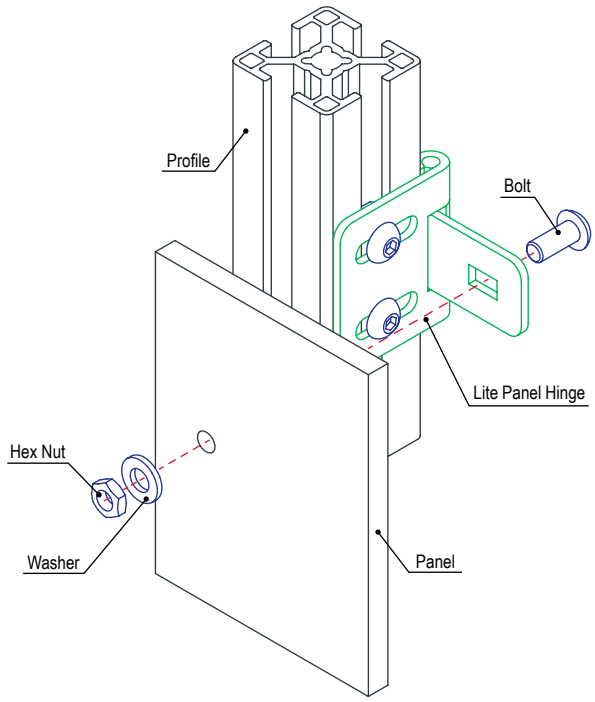

Panels & Doors

Plastic Door Handle

- Used indoor or outdoor
- Mounts directly to T-slot profile or plastic panel

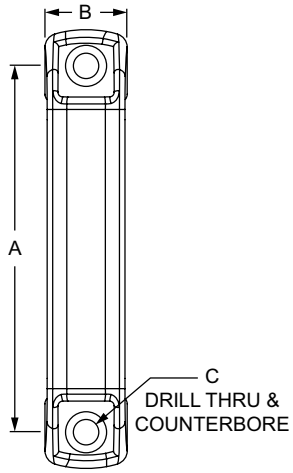

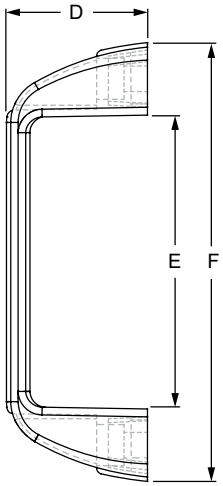

Part No.	Series	Material	Finish	Process	Color	A	B	C	D	E	F	Weight
2062	10	Glass-Filled Nylon	Textured	Molded	Black	3.681"	.827"	1/4	1.417"	2.953"	4.409"	.048 lb
2882	10				Red	3.681"	.827"	1/4	1.417"	2.953"	4.409"	.060 lb
2061	15				Black	4.606"	1.024"	5/16	1.614"	3.779"	5.472"	.079 lb
2881	15				Red	4.606"	1.024"	5/16	1.614"	3.779"	5.472"	.093 lb
2060	15				Black	7.047"	1.102"	5/16	1.969"	6.181"	8.189"	.178 lb
2880	15				Red	7.047"	1.102"	5/16	1.969"	6.181"	8.189"	.168 lb
25-2062	25 30				Black	93.50mm	21.00mm	M6	36.00mm	75.00mm	112.00mm	.0213 kg
25-2882	25 30				Red	93.50mm	21.00mm	M6	36.00mm	75.00mm	112.00mm	.0273 kg
40-2061	40				Black	117.00mm	26.00mm	M8	41.00mm	96.00mm	139.00mm	.0262 kg
40-2881	40				Red	117.00mm	26.00mm	M8	41.00mm	96.00mm	139.00mm	.0426 kg
40-2060	40				Black	179.00mm	28.00mm	M8	50.00mm	157.00mm	208.00mm	.0812 kg
40-2880	40				Red	179.00mm	28.00mm	M8	50.00mm	157.00mm	208.00mm	.0749 kg

Suggested Hardware (Mount to T-Slot)

Part No.	Series	Qty.	Bolt	T-Nut
3491	10	2	1/4-20 x 1/2" SHCS	Economy
3454	15	2	5/16-18 x 5/8" SHCS	Economy
75-3521	25 30	2	M6 x 12mm SHCS	Economy
75-3634	40	2	M8 x 18mm SHCS	Economy

Suggested Hardware (Mount to Panel ≤ .250" / 6mm)

Part No.	Series	Qty.	Bolt	T-Nut
3315	10	2	1/4-20 x 7/8" SHCS & Washer	Hex Nut
3473	15	2	5/16-18 x 1" SHCS & Washer	Hex Nut
75-3470	25 30	2	M6 x 16mm SHCS & Washer	Hex Nut
75-3475	40	2	M8 x 20mm SHCS & Washer	Hex Nut

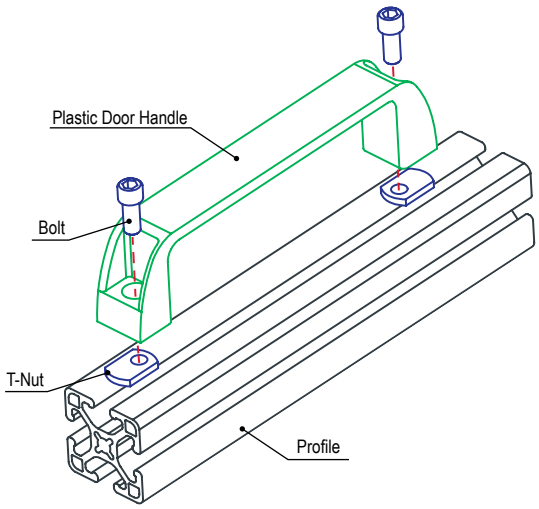

80/20 BUILD YOUR IDEA
More on 80/20® products available at 8020.net

Offset Plastic Handle

- Used indoor or outdoor; mounting hardware included
- Mounts directly to T-slot profile; ideal for bi-fold doors

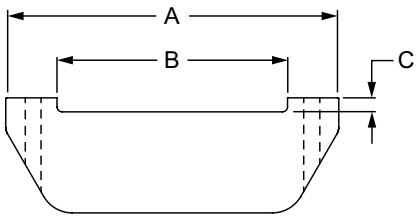

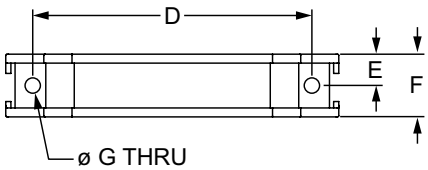

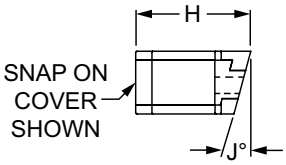

Part No.	Series	Body Color	Cover Color	A	B	C	D	E	F	G	H	J	Weight
2079	10 15	Black	Orange	5.078"	3.543"	.394"	4.291"	.482"	.964"	.236"	1.767"	15°	.196 lb
40-2079	25 30 40			129.00mm	90.00mm	10.00mm	109.00mm	12.25mm	24.50mm	6.00mm	44.90mm	15°	.0826 kg

Material Specifications

Material	Finish	Process
Fiberglass-Reinforced Nylon	Matte	Molded

Included Hardware (Mount to T-Slot)

Part No.	Series	Qty.	Bolt	T-Nut
75-3802	10	2	1/4-20 x 5/8 BHSCS	Economy
75-3804	15	2	1/4-20 x 3/4 BHSCS	Economy
75-3406	25 30	2	M6 x 16mm BHSCS	Economy
75-3407	40	2	M6 x 20mm BHSCS	Economy

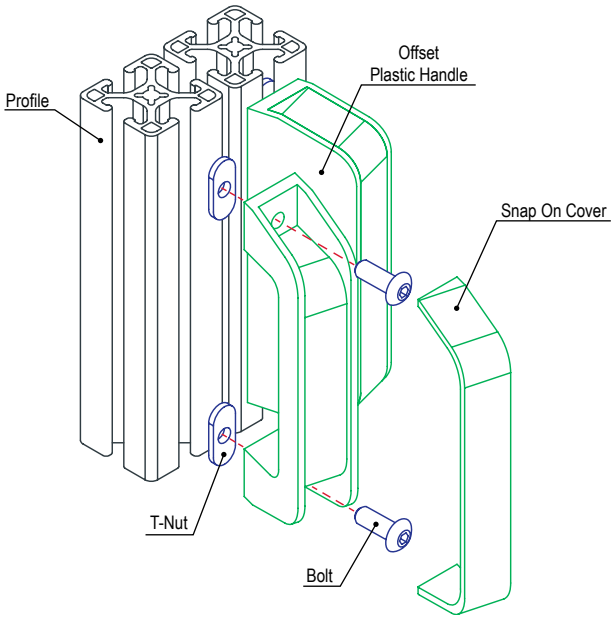

Panels & Doors

Ergonomic Plastic Handle

- Used indoor or outdoor
- Mounts directly to T-slot profile

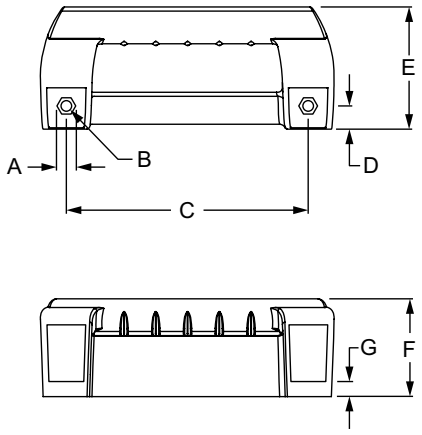

Part No.	Series	Material	Process	Color	A	B	C	D	E	F	G	H	Weight
12000	15 40 45	Nylon PA	Injection Molded	Black	16.00mm	8.70mm	198.00mm	19.00mm	100.00mm	80.00mm	12.50mm	38.00mm	.0762 kg

Suggested Hardware (Mount to T-Slot)

Part No.	Series	Qty.	Bolt	T-Nut
3454	15	2	5/16-18 x 5/8 SHCS	Economy
75-3621	40	2	M8 x 16mm SHCS	Economy
75-3623	45	2	M8 x 16mm SHCS	Drop-In

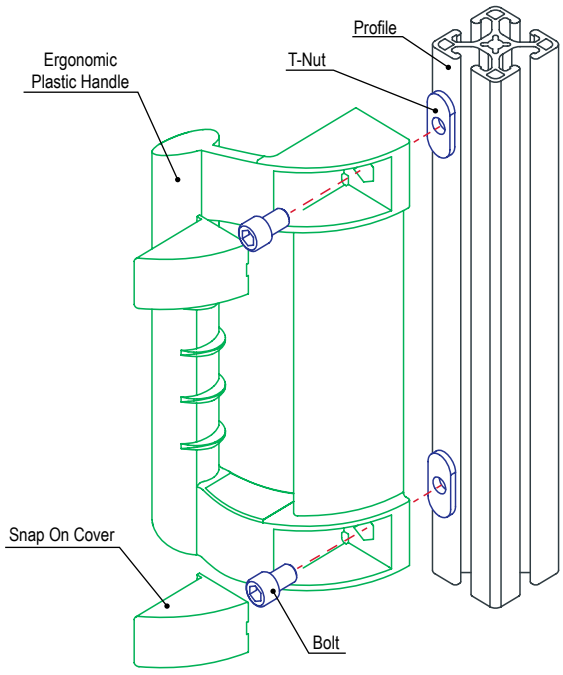

80/20 BUILD YOUR IDEA
More on 80/20® products available at 8020.net

Aluminum Door Handle

- Used indoor or outdoor
- Mounts directly to T-slot profile

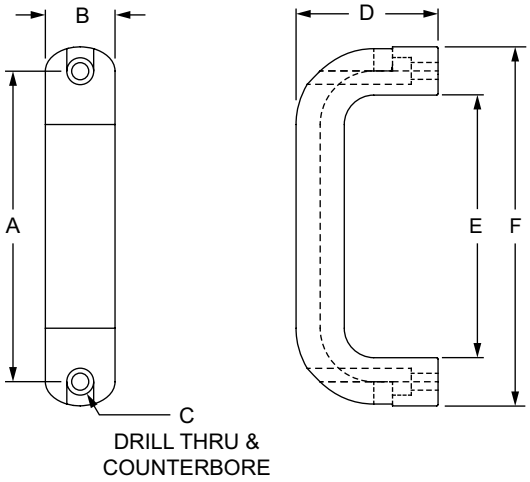

Part No.	Series	Material	Finish	Process	Color	A	B	C	D	E	F	Weight
2884	10 15	Aluminum	Textured Powder Coat	Extruded	Black	4.570"	1.020"	1/4	2.090"	3.858"	5.275"	.354 lb
2885	10 15		Tumbled Mill		Silver	4.570"	1.020"	1/4	2.090"	3.858"	5.275"	.343 lb
2886	10 15		Textured Powder Coat		Black	6.460"	1.020"	1/4	2.240"	5.750"	7.165"	.453 lb
2887	10 15		Tumbled Mill		Silver	6.460"	1.020"	1/4	2.240"	5.750"	7.165"	.459 lb
40-2884	25 30 40 45		Textured Powder Coat		Black	116.00mm	26.00mm	M6	53.00mm	98.00mm	134.00mm	.1589 kg
40-2885	25 30 40 45		Tumbled Mill		Silver	116.00mm	26.00mm	M6	53.00mm	98.00mm	134.00mm	.1533 kg
40-2886	25 30 40 45		Textured Powder Coat		Black	164.00mm	26.00mm	M6	57.00mm	146.00mm	182.00mm	.2118 kg
40-2887	25 30 40 45		Tumbled Mill		Silver	164.00mm	26.00mm	M6	57.00mm	146.00mm	182.00mm	.2095 kg

Suggested Hardware (Mount to T-Slot)

Series	Part No.	Qty.	Bolt	Part No.	Qty.	T-Nut
10	3067	2	1/4-20 x .625" SHCS	3382	2	Economy
15	3064	2	1/4-20 x .750" SHCS	3382	2	Economy
25 30	11-6518	2	M6 x 18mm SHCS	25-1961	2	Economy
40	11-6520	2	M6 x 20mm SHCS	40-1961	2	Economy
45	11-6520	2	M6 x 20mm SHCS	13129	2	Drop-In

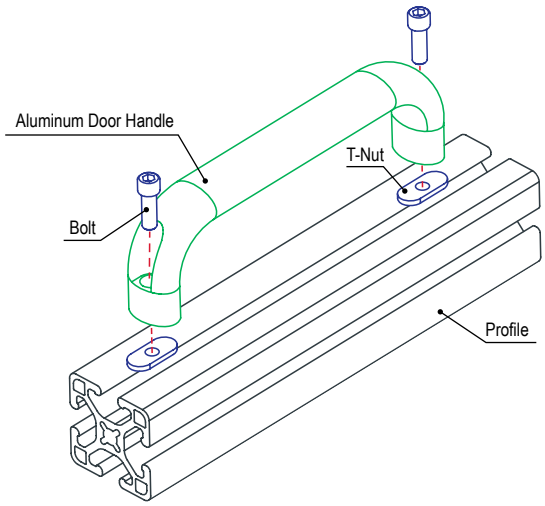

Panels & Doors

Ready Tube® Aluminum Handle

- Used indoor or outdoor
- Mounts directly to Ready Tube profile

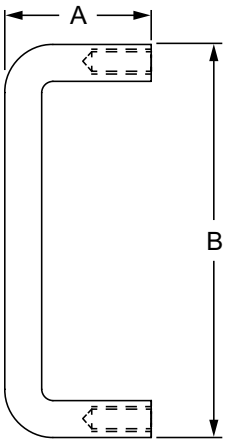

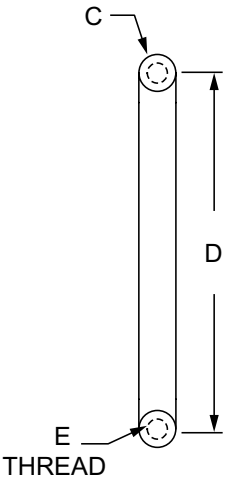

Part No.	Series	Material	Alloy	Finish	A	B	C	D	E	Weight
2888	RT	Aluminum	6061-T6	Black Anodize	1.500"	5.000"	.500"	4.500"	5/16-18	.110 lb
2889	RT				1.500"	6.500"	.500"	6.000"	5/16-18	.137 lb

Suggested Hardware (Mount to Ready Tube Profile)

Part No.	Series	Qty.	Bolt
3753	RT	2	5/16-18 x 2.00" Flanged Hex Head Bolt

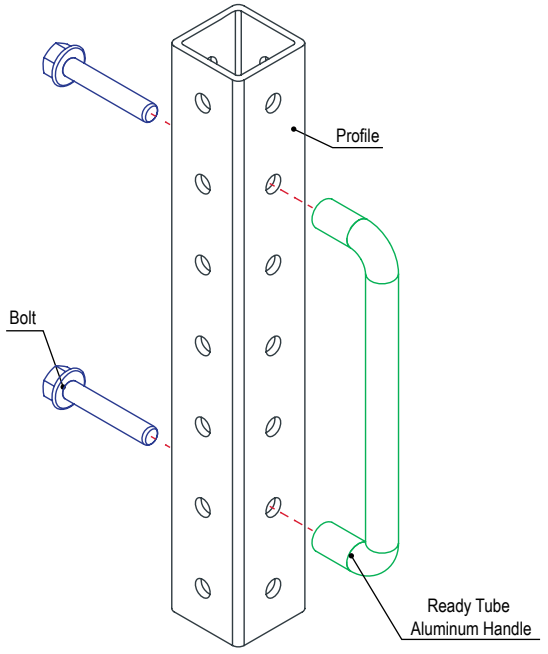

80/20 BUILD YOUR IDEA
More on 80/20® products available at 8020.net

Steel Door Handle

- Mounting hardware included
- Mounts directly to plastic panels

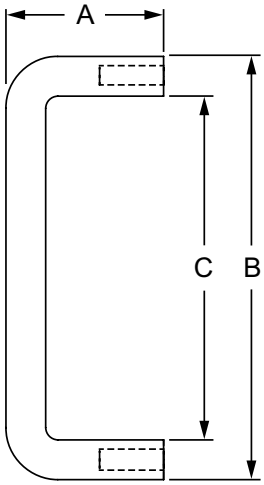

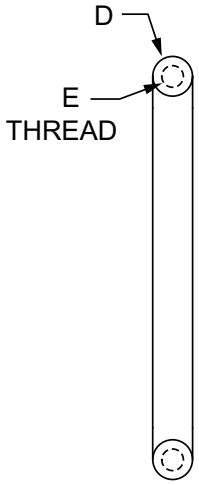

Part No.	Series	Material	Grade	Finish	Process	Color	A	B	C	D	E	Weight
2070	F M	Steel	Carbon	26D Brushed	Formed	Chrome	1.230"	3.300"	2.680"	.310"	8-32 x .500	.104 lb
65-2070	F M						31.20mm	84.00mm	68.30mm	8.00mm	8-32 x .500	.0470 kg

Required Machining Services

Machining Type	Part Machined	Reference Page
Steel Door Handle Plastic Panel Milling	Panel	10-40

Included Hardware (Mount to 1/4" Panel)

Part No.	Series	Qty.	Bolt
3024	F M	2	8-32 x 1/2" BHSCS

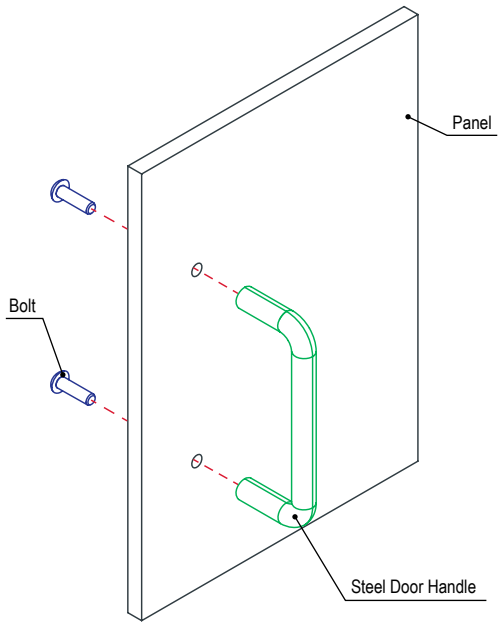

Panels & Doors

Flush Plastic Panel Handle

- Mounts in panels .375" (10mm) or thinner; requires flush handle panel milling service (pg. 10-38)

2056, 65-2056

2058, 65-2058

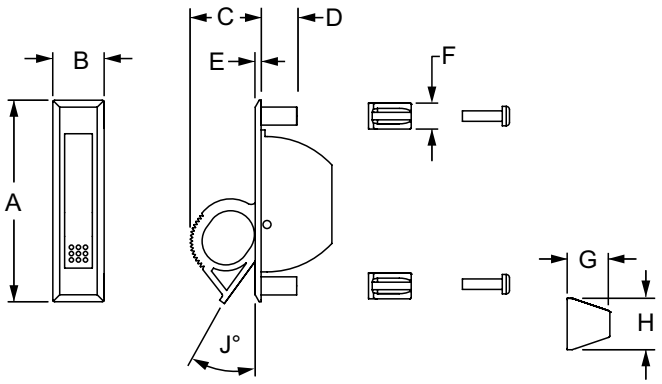

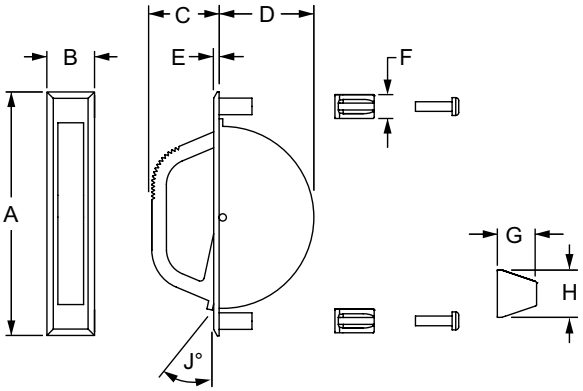

Part No.	Series	Material	Grade	Finish	A	B	C	D	E	F	G	H	J	Weight
2056	F M	Plastic	LNP™ Stat-Kon™	Matte	3.180"	.750"	1.094"	.560"	.094"	.409"	.673"	.811"	30°	.057 lb
2058	F M	Aluminum	—	Black Powder Coat	4.190"	.825"	1.152"	1.625"	.098"	.409"	.673"	.811"	12°	.122 lb
65-2056	F M	Plastic	LNP™ Stat-Kon™	Matte	80.77mm	19.05mm	27.79mm	14.22mm	2.38mm	10.40mm	17.10mm	20.60mm	30°	.0247 kg
65-2058	F M	Aluminum	—	Black Powder Coat	106.40mm	20.95mm	29.26mm	41.27mm	2.49mm	10.40mm	17.10mm	20.60mm	12°	.0562 kg

Required Machining Services

Machining Type	Part Machined	Reference Page
Flush Handle Plastic Panel Milling	Panel	10-38

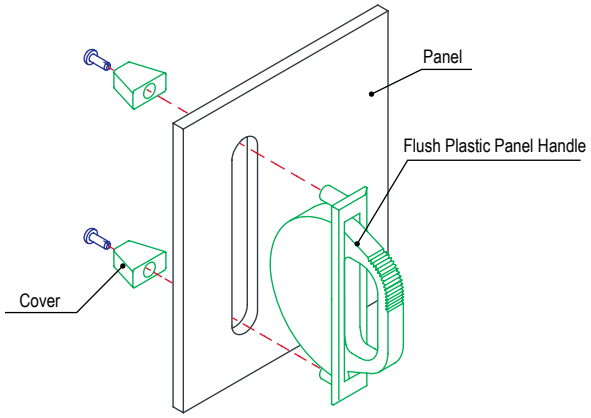

80/20 BUILD YOUR IDEA
More on 80/20® products available at 8020.net

Aluminum Handle

- Used indoor or outdoor; sliding doors
- Mounts to edge of a .236" (6mm) plastic panel
- Available in three stock lengths; custom lengths (pg. 9-20)

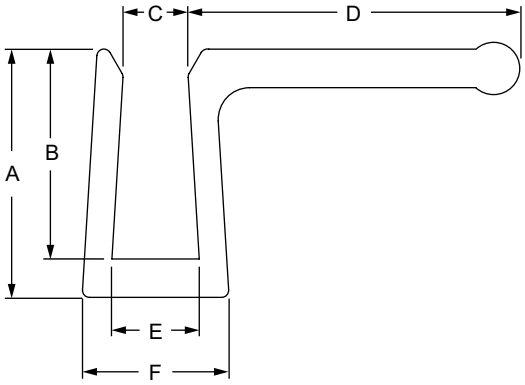

Part No.	Series	A	B	C	D	E	F	Stock Length	Weight
2780	F M	.710"	.600"	.182"	.953"	.245"	.420"	3.000"	.075 lb
2781	F M	.710"	.600"	.182"	.953"	.245"	.420"	6.000"	.150 lb
2782	F M	.710"	.600"	.182"	.953"	.245"	.420"	9.000"	.225 lb
65-2780	F M	18.03mm	15.24mm	4.62mm	24.21mm	6.22mm	10.67mm	76.20mm	.0340 kg
65-2781	F M	18.03mm	15.24mm	4.62mm	24.21mm	6.22mm	10.67mm	152.40mm	.0680 kg
65-2782	F M	18.03mm	15.24mm	4.62mm	24.21mm	6.22mm	10.67mm	228.60mm	.1021 kg

Material Specifications

Material	Alloy	Finish	Process
Aluminum	6005A – T61	Clear Anodize	Extruded

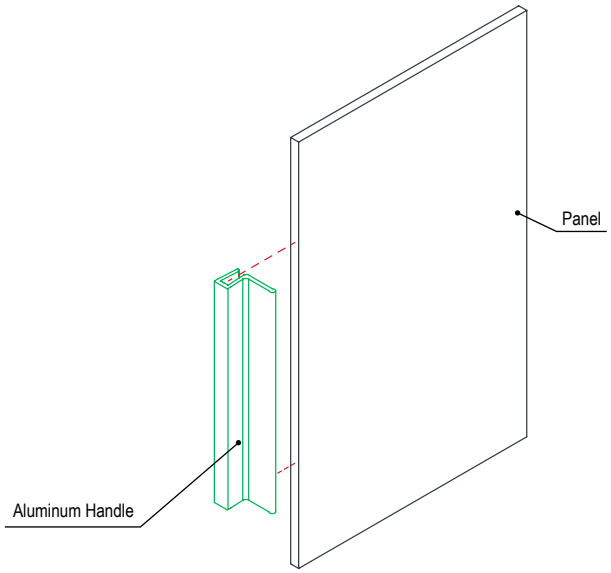

Panels & Doors

Locking Plastic Panel Grabber™ Handle

- Opens from either side; mounts to panels between .075" and .275" (2mm-7mm)
- Mounting hardware and striker plate included

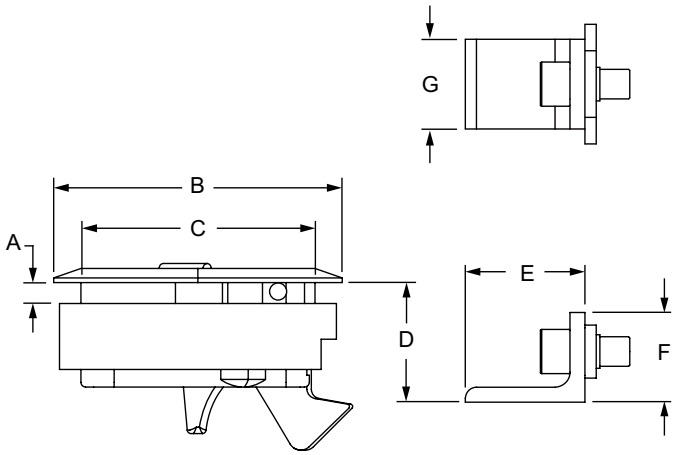

Part No.	Series	Material	Process	Color	A	B	C	D	E	F	G	Weight
2730	10 15 25 30 40 45	PC/PBT Blend	Injection Molded	Black	.075" to .275"	2.413"	1.957"	1.000"	1.000"	.750"	.750"	.180 lb
65-2730					2mm to 7mm	61.30mm	49.70mm	25.40mm	25.40mm	19.05mm	19.05mm	.0806 kg

Required Machining Services

Machining Type	Part Machined	Reference Page
Locking Grabber Handle Panel Milling	Panel	10-37

Included Hardware (Mount Striker Plate to T-Slot)

Part No.	Series	Qty.	Description
3058	10 25 30	1	1/4-20 x 3/8" SHCS
3062	15 40	1	1/4-20 x 1/2" SHCS
3382	10 15 25 30 40	1	Slide-In Economy T-Nut

Suggested Hardware (Mount Striker Plate to T-Slot)

Part No.	Series	Qty.	Description
11-6514	45	1	M6 x 14mm SHCS
14126	45	1	Slide-In Economy T-Nut Block

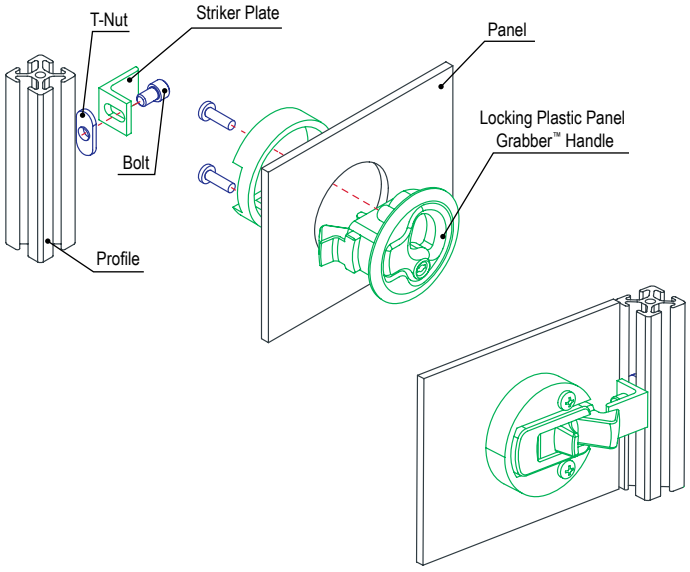

80/20 BUILD YOUR IDEA
More on 80/20® products available at 8020.net

Deluxe Door Handle with Pawl Kit

- Includes deluxe door handle (pg. 4-118), pawl kit (pg. 4-121) and mounting hardware
- Requires deluxe door handle profile milling service (pg. 10-16)

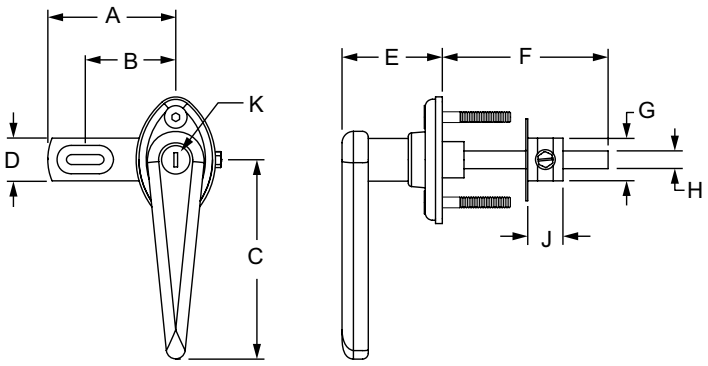

Part No.	Series	A	B	C	D	E	F	G	H	J	K	Weight
2055	15	2.250"	1.590"	3.313"	.750"	1.969"	3.000"	.750"	.313"	.620"	Non-Locking	.301 lb
2063	15	2.250"	1.590"	3.313"	.750"	1.969"	3.000"	.750"	.313"	.620"	Locking	.695 lb
40-2055	40	57.15mm	40.38mm	84.15mm	19.05mm	50.00mm	76.20mm	19.05mm	7.95mm	15.75mm	Non-Locking	.3012 kg
40-2063	40	57.15mm	40.38mm	84.15mm	19.05mm	50.00mm	76.20mm	19.05mm	7.95mm	15.75mm	Locking	.3065 kg

Material Specifications

Material	Finish
Steel	Chrome

Required Machining Services

Machining Type	Part Machined	Reference Page
Deluxe Door Handle Profile Milling	Profile	10-16

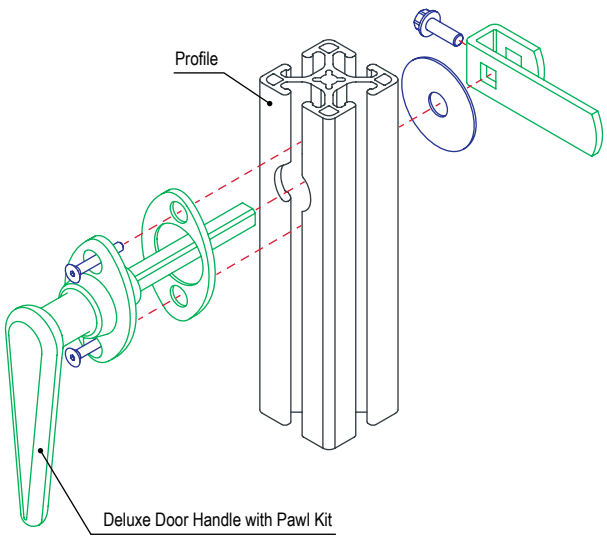

Panels & Doors

Deluxe Door Mating Handle

- Attaches with a simple set screw deluxe door handle with pawl kit (pg. 4-117)
- Requires no machining service

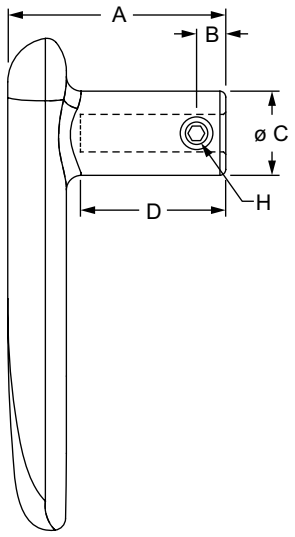

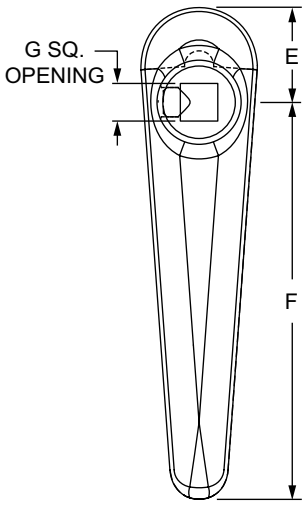

Part No.	Series	Material	Finish	A	B	C	D	E	F	G	H	Weight
2052	15	Steel	Chrome	1.875"	.250"	.719"	1.250"	.813"	3.313"	.320"	1/4-20 x .250	.362 lb
40-2052	40			47.63mm	6.35mm	18.26mm	3.18mm	2.07mm	84.15mm	8.13mm	1/4-20 x .250	.1570 kg

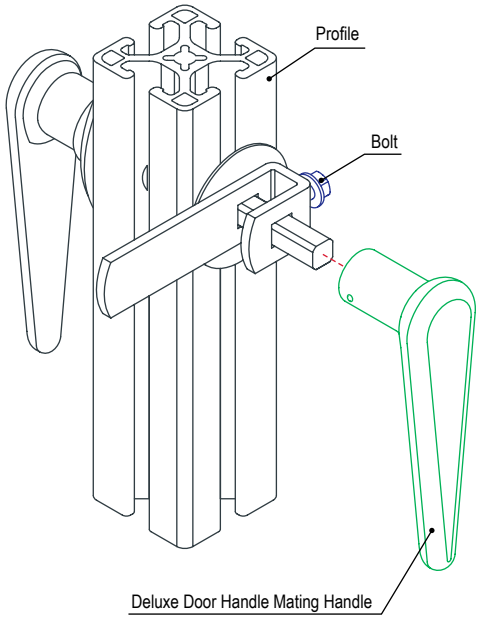

80/20 BUILD YOUR IDEA
More on 80/20® products available at 8020.net

Furniture Style Handle

- Comes in chrome-plated or matte black, “T” or “L” shape, locking or unlocking, 90 degree counter-clockwise or clockwise rotation
- Includes mounting hardware; use pawl kit (4-121) to latch
- Requires furniture style handle profile milling service (pg. 10-17)

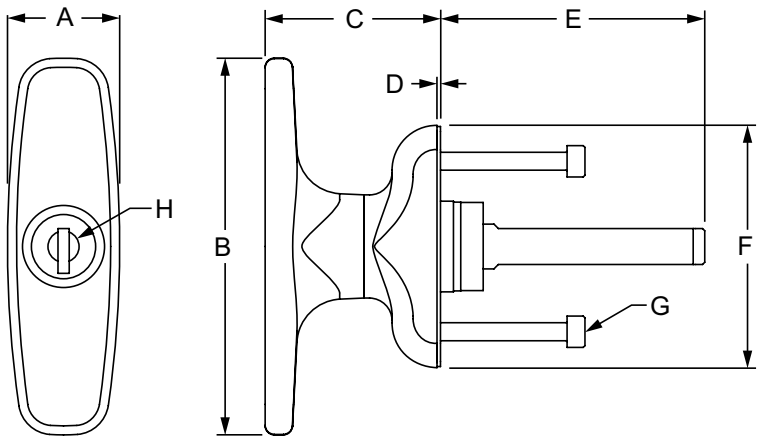

Part No.	Series	Material	Finish	Color	Rotation to Close	A	B	C	D	E	F	G	H	Weight
2082	10 15	Die Cast Zinc	Chrome	Bright	Counter Clockwise	.984”	3.307”	1.535”	.031”	2.319”	2.126”	M4-0.7	Locking	.552 lb
2083	10 15					.984”	3.307”	1.535”	.031”	2.319”	2.126”	M4-0.7	Non-Locking	.532 lb
2952	10 15		Powder Coat	Black		.984”	3.307”	1.535”	.031”	2.319”	2.126”	M4-0.7	Locking	.568 lb
2953	10 15					.984”	3.307”	1.535”	.031”	2.319”	2.126”	M4-0.7	Non-Locking	.523 lb
2932	10 15		Chrome	Bright	Clockwise	.984”	3.307”	1.535”	.031”	2.319”	2.126”	M4-0.7	Locking	.686 lb
2933	10 15					.984”	3.307”	1.535”	.031”	2.319”	2.126”	M4-0.7	Non-Locking	.649 lb
2922	10 15		Powder Coat	Black		.984”	3.307”	1.535”	.031”	2.319”	2.126”	M4-0.7	Locking	.646 lb
2923	10 15					.984”	3.307”	1.535”	.031”	2.319”	2.126”	M4-0.7	Non-Locking	.647 lb
65-2082	25 40		Chrome	Bright	Counter Clockwise	25.00mm	84.00mm	39.00mm	.80mm	57.50mm	54.00mm	M4-0.7	Locking	.2545 kg
65-2083	25 40					25.00mm	84.00mm	39.00mm	.80mm	57.50mm	54.00mm	M4-0.7	Non-Locking	.2371 kg
65-2952	25 40		Powder Coat	Black		25.00mm	84.00mm	39.00mm	.80mm	57.50mm	54.00mm	M4-0.7	Locking	.3356 kg
65-2953	25 40					25.00mm	84.00mm	39.00mm	.80mm	57.50mm	54.00mm	M4-0.7	Non-Locking	.2387 kg
65-2932	25 40		Chrome	Bright	Clockwise	25.00mm	84.00mm	39.00mm	.80mm	59.00mm	54.00mm	M4-0.7	Locking	.3113 kg
65-2933	25 40					25.00mm	84.00mm	39.00mm	.80mm	59.00mm	54.00mm	M4-0.7	Non-Locking	.2947 kg
65-2922	25 40		Powder Coat	Black		25.00mm	84.00mm	39.00mm	.80mm	59.00mm	54.00mm	M4-0.7	Locking	.2934 kg
65-2923	25 40					25.00mm	84.00mm	39.00mm	.80mm	59.00mm	54.00mm	M4-0.7	Non-Locking	.2937 kg

Required Machining Services

Machining Type	Part Machined	Reference Page
Furniture Style Handle Profile Milling	Profile	10-17

Panels & Doors

Furniture Style Handle (Continued)

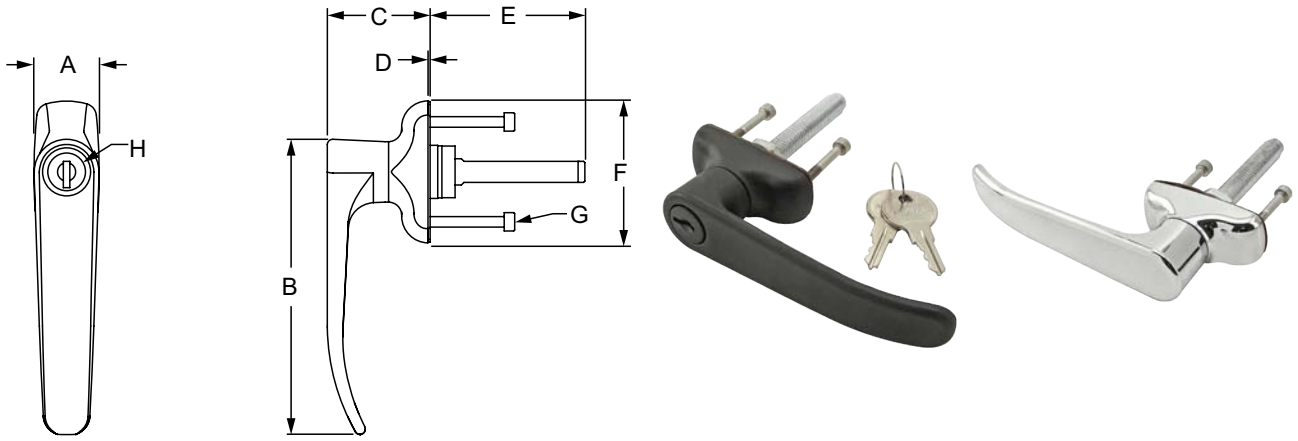

Part No.	Series	Material	Finish	Color	Rotation to Close	A	B	C	D	E	F	G	H	Weight
2087	10 15	Die Cast Zinc	Chrome	Bright	Counter Clockwise	.984"	4.423"	1.535"	.031"	2.319"	2.126"	M4-0.7	Locking	.580 lb
2089	10 15					.984"	4.423"	1.535"	.031"	2.319"	2.126"	M4-0.7	Non-Locking	.553 lb
2957	10 15		Powder Coat	Black		.984"	4.423"	1.535"	.031"	2.319"	2.126"	M4-0.7	Locking	.579 lb
2959	10 15					.984"	4.423"	1.535"	.031"	2.319"	2.126"	M4-0.7	Non-Locking	.549 lb
2937	10 15		Chrome	Bright	Clockwise	.984"	4.423"	1.535"	.031"	2.319"	2.126"	M4-0.7	Locking	.701 lb
2939	10 15					.984"	4.423"	1.535"	.031"	2.319"	2.126"	M4-0.7	Non-Locking	.670 lb
2927	10 15		Powder Coat	Black		.984"	4.423"	1.535"	.031"	2.319"	2.126"	M4-0.7	Locking	.700 lb
2929	10 15					.984"	4.423"	1.535"	.031"	2.319"	2.126"	M4-0.7	Non-Locking	.546 lb
65-2087	25 40		Chrome	Bright	Counter Clockwise	25.00mm	112.34mm	39.00mm	.80mm	59.00mm	54.00mm	M4-0.7	Locking	.2499 kg
65-2089	25 40					25.00mm	112.34mm	39.00mm	.80mm	59.00mm	54.00mm	M4-0.7	Non-Locking	.2475 kg
65-2957	25 40		Powder Coat	Black		25.00mm	112.34mm	39.00mm	.80mm	59.00mm	54.00mm	M4-0.7	Locking	.2615 kg
65-2959	25 40					25.00mm	112.34mm	39.00mm	.80mm	59.00mm	54.00mm	M4-0.7	Non-Locking	.2482 kg
65-2937	25 40		Chrome	Bright	Clockwise	25.00mm	112.34mm	39.00mm	.80mm	59.00mm	54.00mm	M4-0.7	Locking	.3180 kg
65-2939	25 40					25.00mm	112.34mm	39.00mm	.80mm	59.00mm	54.00mm	M4-0.7	Non-Locking	.3043 kg
65-2927	25 40		Powder Coat	Black		25.00mm	112.34mm	39.00mm	.80mm	59.00mm	54.00mm	M4-0.7	Locking	.3177 kg
65-2929	25 40					25.00mm	112.34mm	39.00mm	.80mm	59.00mm	54.00mm	M4-0.7	Non-Locking	.3044 kg

Required Machining Services

Machining Type	Part Machined	Reference Page
Furniture Style Handle Profile Milling	Profile	10-17

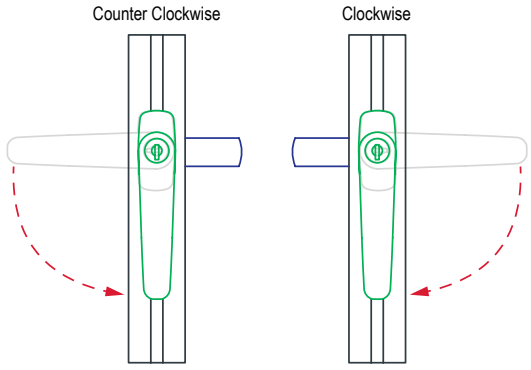

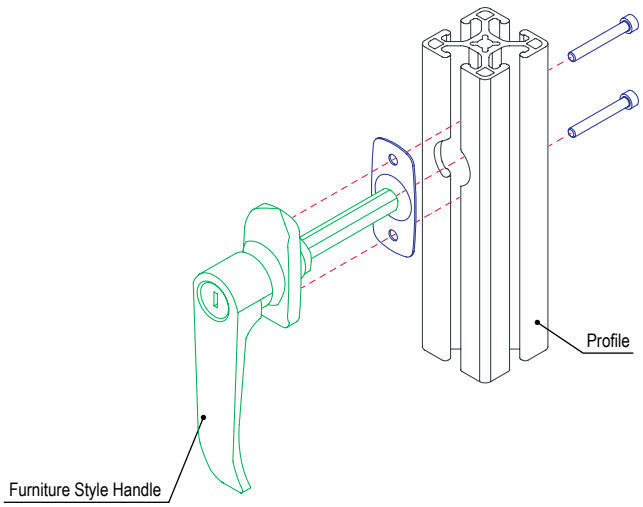

80/20 BUILD YOUR IDEA
More on 80/20® products available at 8020.net

Furniture Style Handle Pawl Kit

- Used to assist in latching a deluxe (pg. 4-118) or furniture style handle (pg. 4-119); mounting hardware included
- Available as transition between 10 and 15 series or 25 and 40 series

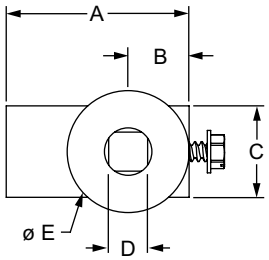

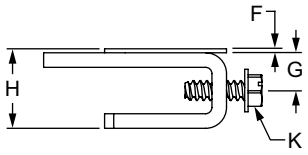

10 & 25 Series

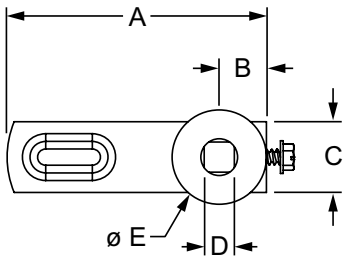

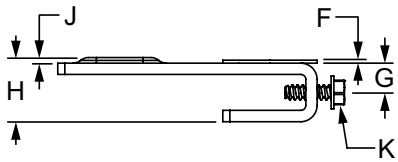

15 & 40 Series

Part No.	Series	A	B	C	D	E	F	G	H	J	K	Weight
2761	10	1.250"	.500"	.750"	.320"	1.000"	.032"	.310"	.652"	—	SDS #10 x .500"	.072 lb
2763	10 to 15	1.500"	.500"	.750"	.320"	1.000"	.032"	.310"	.652"	—	SDS #10 x .500"	.088 lb
2765	15	1.750"	.500"	.750"	.320"	1.000"	.032"	.310"	.680"	.060"	SDS #10 x .500"	.086 lb
2760	15	2.750"	.500"	.750"	.320"	1.000"	.032"	.310"	.680"	.060"	SDS #10 x .500"	.118 lb
25-2761	25	31.75mm	12.70mm	19.05mm	8.13mm	25.40mm	.81mm	7.87mm	16.56mm	—	SDS #10 x .500"	.0272 kg
65-2763	25 to 40	38.10mm	12.70mm	19.05mm	8.13mm	25.40mm	.81mm	7.87mm	16.56mm	—	SDS #10 x .500"	.0320 kg
40-2765	40	44.45mm	12.70mm	19.05mm	8.13mm	25.40mm	.81mm	7.87mm	16.56mm	1.52mm	SDS #10 x .500"	.0327 kg
40-2760	40	69.90mm	12.70mm	19.05mm	8.13mm	25.40mm	.81mm	7.87mm	17.27mm	1.52mm	SDS #10 x .500"	.0426 kg

Material Specifications

Material	Grade	Finish	Process
Steel	Low Carbon	Bright Zinc	Stamping / Blending

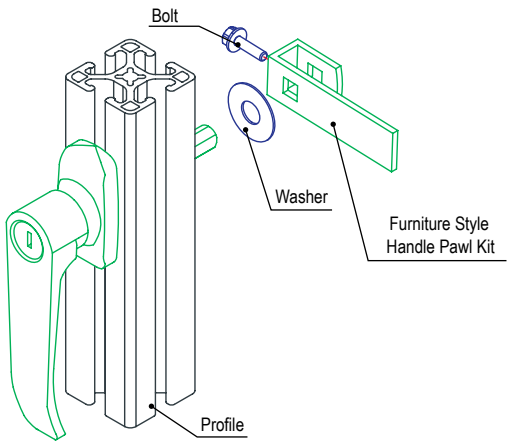

Panels & Doors

Slam Latch

- Mounts to T-slot door or frame from front; requires no machining
- Safe against disassembly in locked position; available with locking mechanisms keyed alike, keyed different or without lock

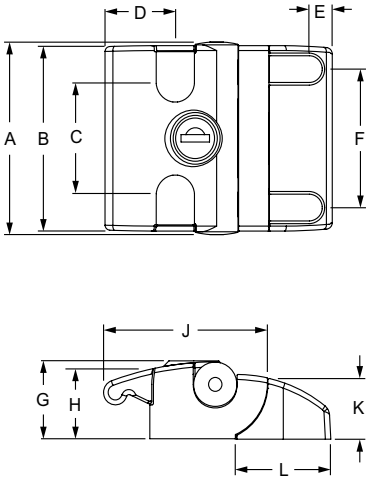

Front View

Back View

Part No.	Series	Lock	A	B	C	D	E	F	G	H	J	K	L	Weight
12145	15 30 40 45	keyed alike	77.80mm	75.00mm	44.40mm	30.00mm	9.90mm	56.00mm	31.60mm	28.30mm	69.00mm	24.50mm	40.20mm	.2404 kg
12146		different key	77.80mm	75.00mm	44.40mm	30.00mm	9.90mm	56.00mm	31.60mm	28.30mm	69.00mm	24.50mm	40.20mm	.2418 kg
12147		without key	77.80mm	75.00mm	44.40mm	30.00mm	9.90mm	56.00mm	31.60mm	28.30mm	69.00mm	24.50mm	40.20mm	.2002 kg

Material Specifications

Material	Finish	Process	Color
Aluminum	Powder Coat	Die Cast	Black

Suggested Hardware (Mount to T-Slot)

Part No.	Series	Qty.	Description
13-6516	15 30 40 45	4	M6 x 16mm SHCS
13117	30	4	Standard Drop-In T-Nut
13119	15 40	4	Standard Drop-In T-Nut
13129	45	4	Standard Drop-In T-Nut

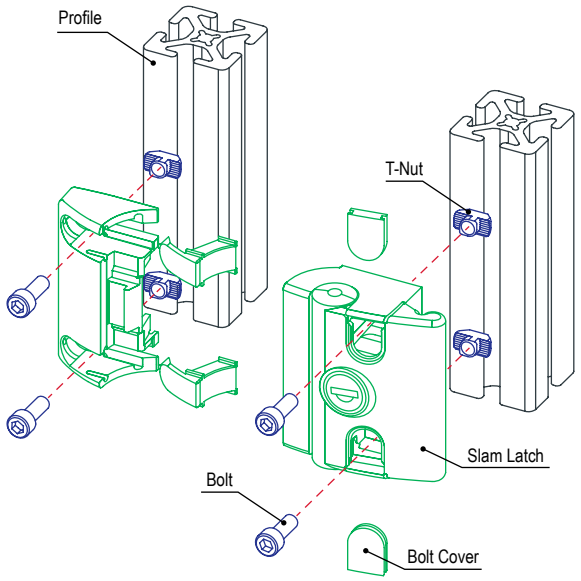

80/20 BUILD YOUR IDEA
More on 80/20® products available at 8020.net

Velcro® Latch

- Recommended for displays, enclosures and light-duty doors
- Mounting hardware included

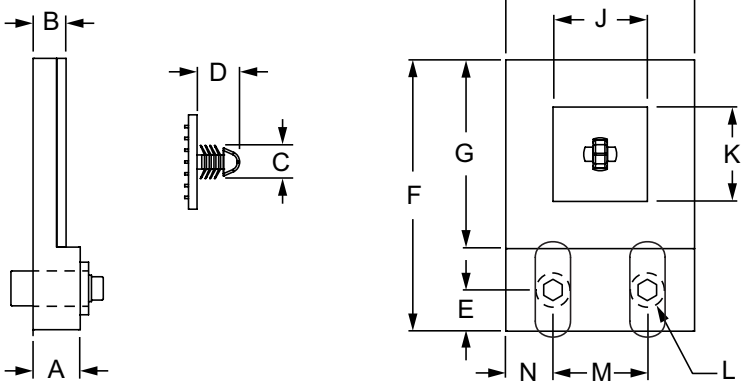

Part No.	Series	A	B	C	D	E	F	G	H	J	K	L	M	N	Weight
2126	15	.500"	.335"	.350"	.448"	.437"	2.875"	2.000"	2.000"	1.000"	1.000"	1/4-20	1.000"	.500"	.243 lb
65-2126	40	12.70mm	8.50mm	8.90mm	11.40mm	11.10mm	73.03mm	50.80mm	50.80mm	25.40mm	25.40mm	M6 x 1.0	25.40mm	12.70mm	.1048 kg

Included Hardware (Mount Velcro Latch to T-Slot)

Series	Part No.	Qty.	Bolt	Part No.	Qty.	T-Nut
15	3068	2	1/4-20 x 7/8" SHCS	3382	2	Slide-In Economy T-Nut
40	13-6520	2	M6 x 20mm SHCS	3859	2	Slide-In Economy T-Nut

Material Specifications

Housing Material	Alloy	Pad Material
Aluminum	6005A – T61	Velcro®

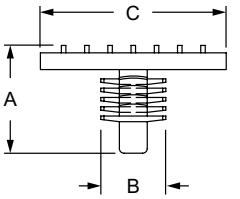

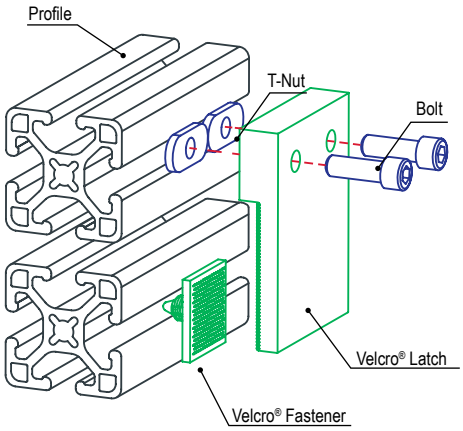

Velcro® Fastener

Part No.	Series	A	B	C	Weight
3273	15	.580"	.350"	1.000"	.007 lb
40-3273	40	14.74mm	8.89mm	25.40mm	.0023 kg

Material Specifications

Material	Grade	Process	Color
Plastic	PVC	Injection Mold	Black

Panels & Doors

0 Degree Deadbolt Latch

- Spring-loaded deadbolt ideal for guarding and enclosures
- Hardware to mount latch to T-slot included

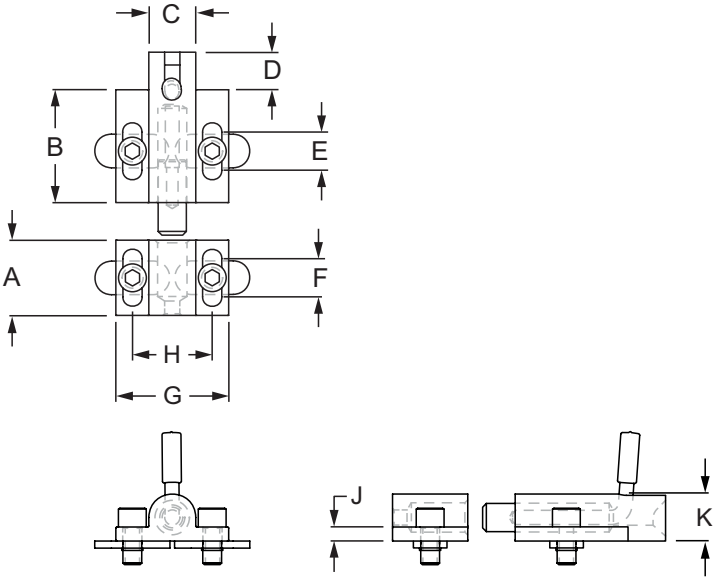

Part No.	Series	Color	A	B	C	D	E	F	G	H	J	K	Weight
2053	10 15	Clear	1.000"	1.500"	.625"	.500"	.507"	.500"	1.500"	1.062"	.187"	.625"	.226 lb
2053-Black	10 15	Black	1.000"	1.500"	.625"	.500"	.507"	.500"	1.500"	1.062"	.187"	.625"	.226 lb
65-2053	25 30 40	Clear	25.40mm	38.10mm	15.88mm	12.70mm	12.88mm	12.70mm	38.10mm	26.97mm	4.75mm	15.88mm	.1007 kg
65-2053-Black	25 30 40	Black	25.40mm	38.10mm	15.88mm	12.70mm	12.88mm	12.70mm	38.10mm	26.97mm	4.75mm	15.88mm	.1007 kg
45-2053	45	Clear	38.00mm	38.10mm	15.88mm	12.70mm	12.88mm	25.40mm	38.10mm	26.97mm	4.75mm	15.88mm	.1212 kg
45-2053-Black	45	Black	38.00mm	38.10mm	15.88mm	12.70mm	12.88mm	25.40mm	38.10mm	26.97mm	4.75mm	15.88mm	.1212 kg

Material Specifications

Material	Alloy	Finish	Process
Aluminum	6005A – T61	Anodize	Milled

Included Hardware (Mount to T-Slot)

Part No.	Series	Qty.	Description
3062	10 15 25 30 40	4	1/4-20 x 1/2" SHCS
3382		4	1/4-20 Slide-In Economy T-Nut
11-6514	45	4	M6 x 14mm SHCS
13129		4	M6 x 1.0 Drop-in T-Nut

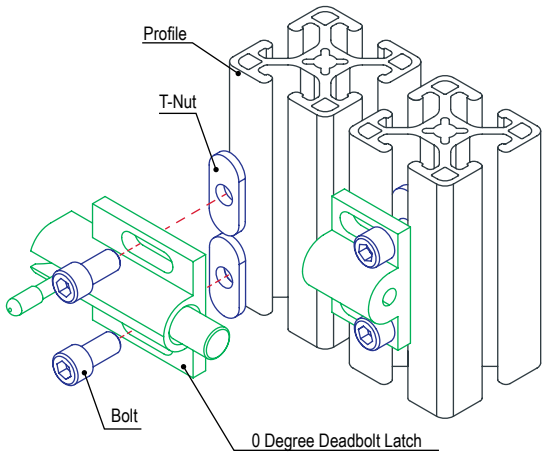

80/20 BUILD YOUR IDEA
More on 80/20® products available at 8020.net

90 Degree Deadbolt Latch

- Spring-loaded deadbolt ideal for guarding and enclosures
- Hardware to mount latch to T-slot included

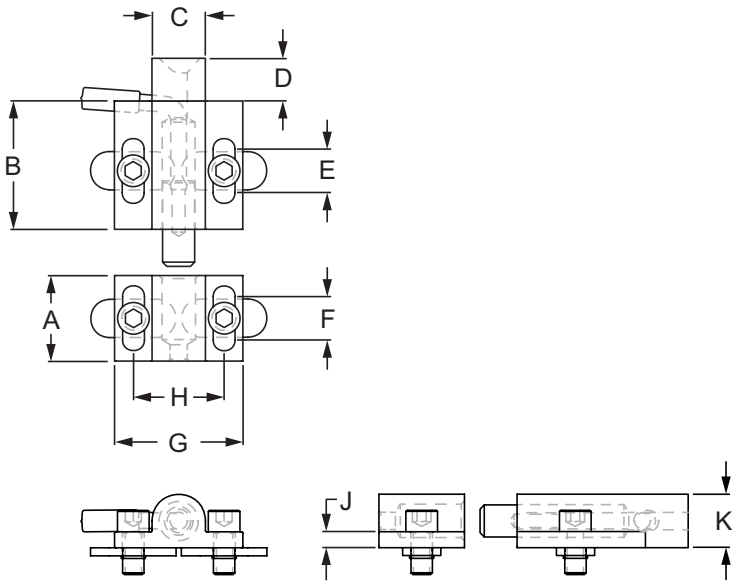

Part No.	Series	Color	A	B	C	D	E	F	G	H	J	K	Weight
2107	10 15	Clear	1.000"	1.500"	.625"	.500"	.507"	.500"	1.500"	1.062"	.187"	.625"	.223 lb
2107-Black	10 15	Black	1.000"	1.500"	.625"	.500"	.507"	.500"	1.500"	1.062"	.187"	.625"	.223 lb
65-2107	25 30 40	Clear	25.40mm	38.10mm	15.88mm	12.70mm	12.88mm	12.70mm	38.10mm	26.97mm	4.75mm	15.88mm	.1004 kg
65-2107-Black	25 30 40	Black	25.40mm	38.10mm	15.88mm	12.70mm	12.88mm	12.70mm	38.10mm	26.97mm	4.75mm	15.88mm	.1004 kg
45-2107	45	Clear	38.00mm	38.10mm	15.88mm	12.70mm	12.88mm	25.40mm	38.10mm	26.97mm	4.75mm	15.88mm	.1209 kg
45-2107-Black	45	Black	38.00mm	38.10mm	15.88mm	12.70mm	12.88mm	25.40mm	38.10mm	26.97mm	4.75mm	15.88mm	.1209 kg

Material Specifications

Material	Alloy	Finish	Process
Aluminum	6005A – T61	Anodize	Milled

Included Hardware (Mount to T-Slot)

Part No.	Series	Qty.	Description
3062	10 15 25 30 40	4	1/4-20 x 1/2" SHCS
3382		4	1/4-20 Slide-In Economy T-Nut
11-6514	45	4	M6 x 14mm SHCS
13129		4	M6 x 1.0 Drop-in T-Nut

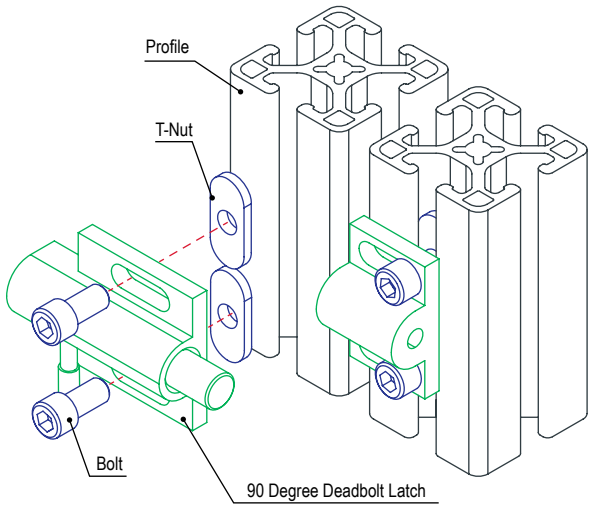

Panels & Doors

Grabber™ Door Catch

- Spring-loaded and mounts to T-slot Grabber door catch mounting plate (pg. 4-127) on the inside of enclosure to create a push to close/pull to open latch
- Mounting hardware included; requires Grabber door catch clearance machining service (pg. 10-37)

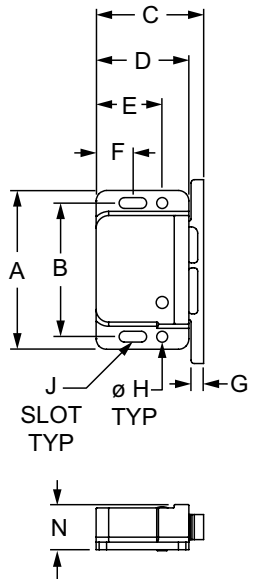

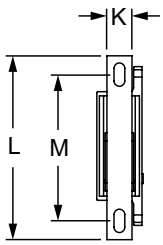

Part No.	Series	A	B	C	D	E	F	G	H	J	K	L	M	N	Pull Force	Weight
2069	10 15	1.900"	1.600"	1.285"	1.110"	.790"	.440"	.150"	.130"	.130 x .330	.300"	2.200"	1.750"	.530"	3.00 lb	.033 lb
2088	10 15	1.900"	1.600"	1.285"	1.110"	.790"	.440"	.150"	.130"	.130 x .330	.300"	2.200"	1.750"	.530"	5.00 lb	.035 lb
2125	10 15	1.900"	1.600"	1.285"	1.110"	.790"	.440"	.150"	.130"	.130 x .330	.300"	2.200"	1.750"	.530"	10.00 lb	.034 lb
65-2069	25 40	48.26mm	40.60mm	32.65mm	28.20mm	20.07mm	11.20mm	3.81mm	3.30mm	3.30mm x 8.40mm	7.62mm	55.88mm	44.45mm	13.70mm	1.40 kg	.0162 kg
65-2088	25 40	48.26mm	40.60mm	32.65mm	28.20mm	20.07mm	11.20mm	3.81mm	3.30mm	3.30mm x 8.40mm	7.62mm	55.88mm	44.45mm	13.70mm	2.30 kg	.0161 kg
65-2125	25 40	48.26mm	40.60mm	32.65mm	28.20mm	20.07mm	11.20mm	3.81mm	3.30mm	3.30mm x 8.40mm	7.62mm	55.88mm	44.45mm	13.70mm	4.60 kg	.0152 kg

Material Specifications

Material	Process	Color
PC / ABS	Injection Molded	Black

Required Machining Services

Machining Type	Part Machined	Reference Page
Grabber Door Catch Panel Milling	Panel	10-37

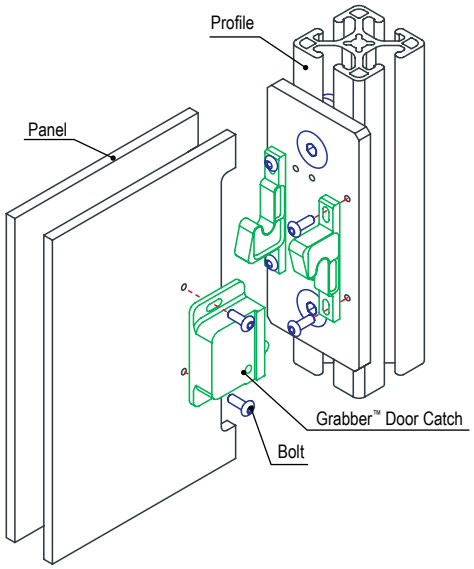

80/20 BUILD YOUR IDEA
More on 80/20® products available at 8020.net

Grabber™ Door Catch Mounting Plate

- Made of .250" anodized aluminum
- Used to mount Grabber door catch (pg. 4-126) to T-slot or plastic panel

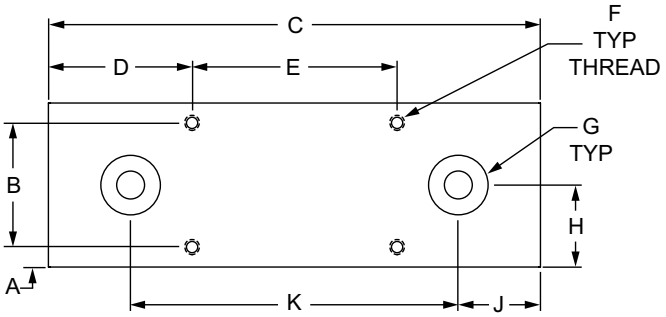

Part No.	Series	Color	A	B	C	D	E	F	G	H	J	K	L	M	Weight
2122	10	Clear	.182"	1.136"	4.500"	1.313"	1.875"	#6-32	5/16-18	.750"	.750"	3.000"	.250"	1.500"	.155 lb
2122-Black	10	Black	.182"	1.136"	4.500"	1.313"	1.875"	#6-32	5/16-18	.750"	.750"	3.000"	.250"	1.500"	.155 lb
25-2122	25	Clear	4.62mm	28.85mm	114.30mm	33.35mm	47.63mm	#6-32	M8 x 1.25	19.05mm	18.67mm	76.20mm	6.35mm	38.10mm	.0706 kg
25-2122-Black	25	Black	4.62mm	28.85mm	114.30mm	33.35mm	47.63mm	#6-32	M8 x 1.25	19.05mm	18.67mm	76.20mm	6.35mm	38.10mm	.0706 kg

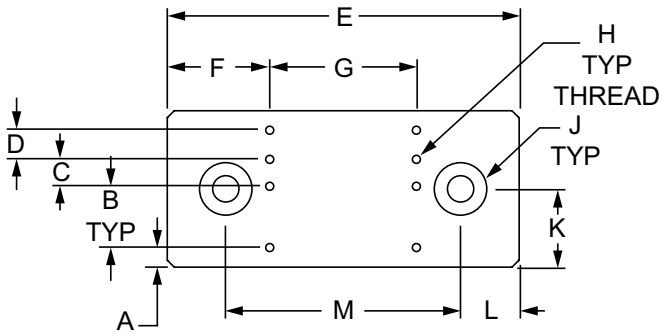

Part No.	Series	Color	A	B	C	D	E	F	G	H	J	K	L	M	N	P	Weight
2121	15	Clear	.250"	.780"	.345"	.375"	4.500"	1.312"	1.875"	#6-32	5/16-18	1.000"	.750"	3.000"	.250"	2.000"	.202 lb
2121-Black	15	Black	.250"	.780"	.345"	.375"	4.500"	1.312"	1.875"	#6-32	5/16-18	1.000"	.750"	3.000"	.250"	2.000"	.202 lb
40-2121	40	Clear	6.35mm	19.81mm	8.76mm	9.53mm	114.30mm	33.32mm	47.63mm	#6-32	M8 x 1.25	25.40mm	19.05mm	76.20mm	6.35mm	50.80mm	.0924 kg
40-2121-Black	40	Black	6.35mm	19.81mm	8.76mm	9.53mm	114.30mm	33.32mm	47.63mm	#6-32	M8 x 1.25	25.40mm	19.05mm	76.20mm	6.35mm	50.80mm	.0924 kg

Panels & Doors

Grabber™ Door Catch Mounting Plate (Continued)

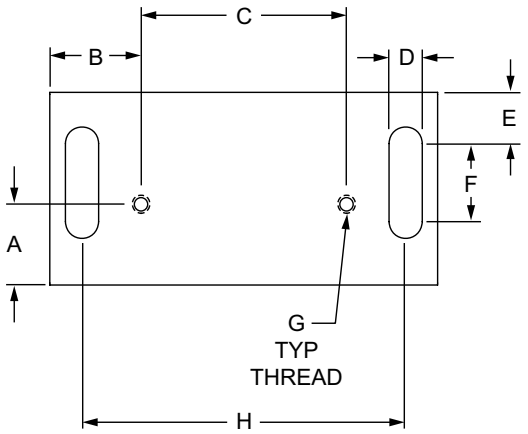

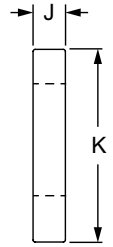

Part No.	Series	Color	A	B	C	D	E	F	G	H	J	K	Weight
2123	10 15	Clear	.625"	.705"	1.590"	.257"	.395"	.605"	#6-32	2.500"	.250"	1.490"	.097 lb
2123-Black	10 15	Black	.625"	.705"	1.590"	.257"	.395"	.605"	#6-32	2.500"	.250"	1.490"	.097 lb
65-2123	25 40	Clear	15.88mm	17.90mm	40.38mm	6.53mm	10.03mm	15.37mm	#6-32	63.50mm	6.35mm	37.85mm	.0440 kg
65-2123-Black	25 40	Black	15.88mm	17.90mm	40.38mm	6.53mm	10.03mm	15.37mm	#6-32	63.50mm	6.35mm	37.85mm	.0440 kg

Material Specifications

Material	Alloy	Finish	Process
Aluminum	6005A – T61	Anodize	Milled

Suggested Hardware (Mount to T-Slot)

Part No.	Bolt Assy.	Series	Qty.	Bolt	T-Nut
2122	3414	10	2	1/4-20 x 1/2" FHSCS	Economy
2123	3321	10	2	1/4-20 x 1/2" FBHSCS	Economy
2123	3371	15	2	1/4-20 x 3/4" BHSCS	Economy
2121	3412	15	2	5/16-18 x 5/8" FHSCS	Economy
25-2122	75-3507	25	2	M6 x 12mm FHSCS	Economy
65-2123	75-3405	25	2	M6 x 12mm BHSCS	Economy
65-2123	75-3406	40	2	M6 x 16mm BHSCS	Economy
40-2121	75-3508	40	2	M8 x 16mm FHSCS	Economy

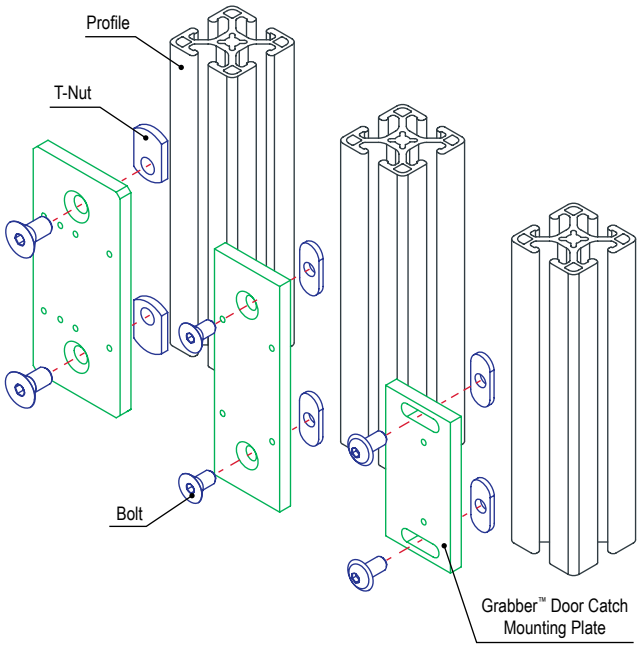

80/20 BUILD YOUR IDEA
More on 80/20® products available at 8020.net

Magnetic Door Catch

- Ideal for latching plastic panels in place; estimated pull force of 12 pounds (5.443 kilograms)
- Mounting hardware included; requires panel tap service to mount striker plate (pg. 10-45)
- Use magnetic door catch bracket (pg. 4-130) to latch profiles together

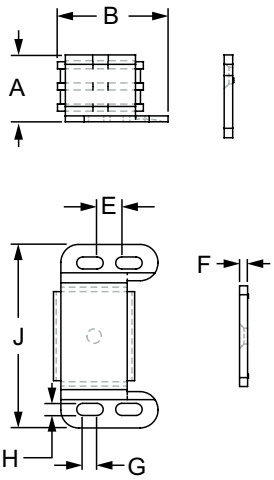

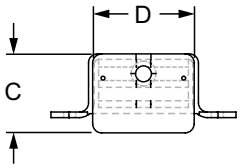

Part No.	Series	Material	Finish	Process	A	B	C	D	E	F	G	H	J	Weight
2090	10 15	Steel	Bright Zinc	Formed	.710"	1.172"	.880"	1.130"	.275"	.090"	.163"	.166"	2.060"	.141 lb
65-2090	25 30 40				18.03mm	29.78mm	22.35mm	28.70mm	6.99mm	2.29mm	4.13mm	4.22mm	52.32mm	.0680 kg
9315	QF				.710"	1.172"	.880"	1.130"	.275"	.090"	.163"	.166"	2.060"	.123 lb

Required Machining Services

Machining Type	Part Machined	Reference Page
Tap	Panel	10-45

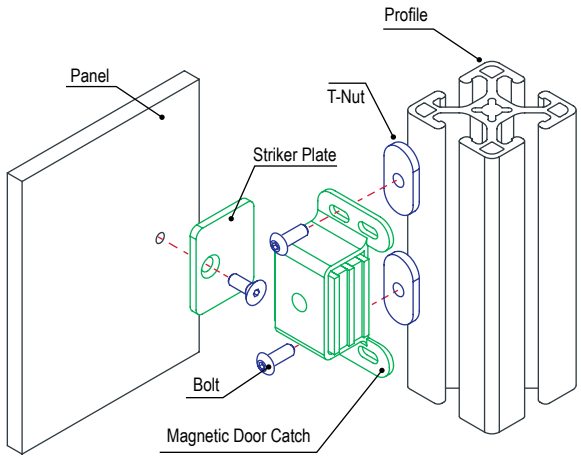

Included Hardware (Mount to T-Slot)

Part No.	Series	Qty.	Description
3005	10 15 25 30 40	2	8-32 x 3/8" BHSCS
3275	10 15 25 30 40	2	Slide-In Economy T-Nut
9325	QF	2	1/4-14 x 3/4" SDS

Included Hardware (Mount Striker Plate to Panel)

Part No.	Series	Qty.	Description
209002	10 15 25 30 40 QF	1	6-32 x 3/8" FHSCS

Suggested Hardware (Mount Striker Plate to Profile)

Series	Part No.	Qty.	Bolt	Part No.	Qty.	T-Nut
10 25	11-4710	1	M4 x 10mm FHSCS	14164	1	Drop-in
15 40	11-4710	1	M4 x 10mm FHSCS	13113	1	Drop-in

Panels & Doors

Magnetic Door Catch Bracket

- Used to attach the magnetic door catch (pg. 4-129)
- Mounting hardware included

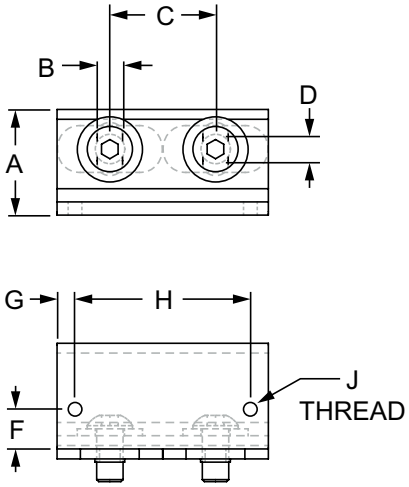

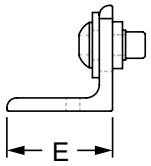

Part No.	Series	Material	Alloy	Finish	Process	A	B	C	D	E	F	G	H	J	Weight
2745	10 15	Aluminum	6005A – T61	Clear Anodize	Milled	1.000"	.250"	1.000"	.250"	1.000"	.375"	.170"	1.660"	8-32	.087 lb
2745-Black	10 15			Black Anodize		1.000"	.250"	1.000"	.250"	1.000"	.375"	.170"	1.660"	8-32	.087 lb
65-2745	25 40			Clear Anodize		25.40mm	6.35mm	25.40mm	6.35mm	25.40mm	9.53mm	4.32mm	42.16mm	8-32	.0372 kg
65-2745-Black	25 40			Black Anodize		25.40mm	6.35mm	25.40mm	6.35mm	25.40mm	9.53mm	4.32mm	42.16mm	8-32	.0372 kg

Included Hardware (Mount to T-Slot)

Series	Qty.	Part No.	Qty.	Part No.	Qty.	Part No.
10 15	2	3061	2	3382	2	3258
25 40	2	13-6312	2	3859	2	13-6041

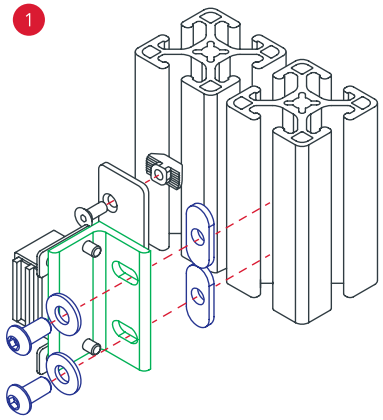

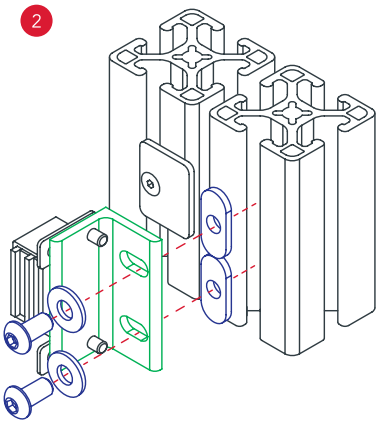

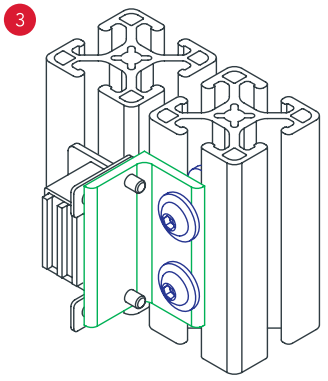

80/20 BUILD YOUR IDEA
More on 80/20® products available at 8020.net

Nylon Magnetic Door Catch

- Quick-catching method ideal for plastic panel doors
- Requires panel tap machining service (pg. 10-45)

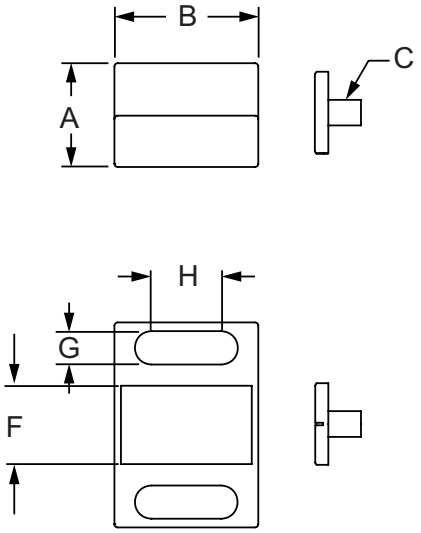

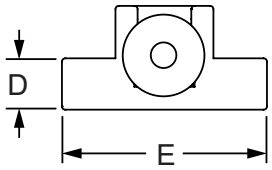

Part No.	Series	Color	A	B	C	D	E	F	G	H	Weight
4486	10 15	Black	.795"	1.102"	M5 x 0.8	.393"	1.570"	.600"	.255"	.532"	.078 lb
65-4486	25 40		20.19mm	28.00mm	M5 x 0.8	10.00mm	39.88mm	15.24mm	6.48mm	13.51mm	.0354 kg

Material Specifications

Material	Finish	Process
Nylon	Black	Injection Molded

Required Machining Services

Machining Type	Part Machined	Reference Page
Tap	Panel	10-45

Suggested Hardware (Mount to T-Slot)

Part No.	Series	Qty.	Bolt	T-Nut
3493	10	2	1/4-20 x 5/8" SHCS	Economy
3304	15	2	1/4-20 x 3/4" SHCS	Economy
75-3522	25	2	M6 x 16mm SHCS	Economy
75-3596	40	2	M6 x 18mm SHCS	Drop-In

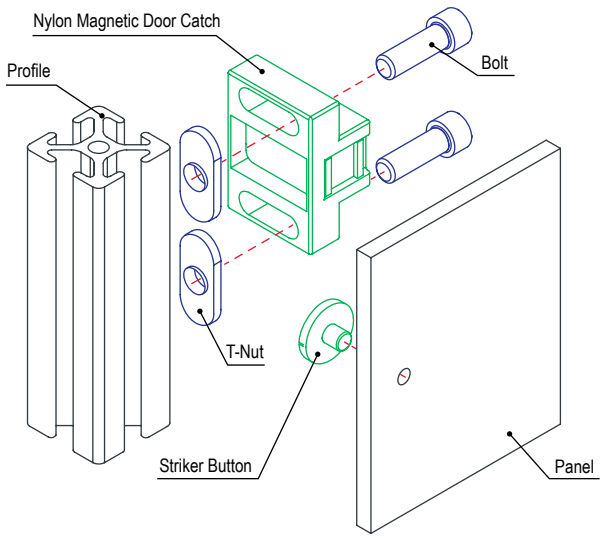

Panels & Doors

Single Ball Catch

- Quick-catching method ideal for plastic panel doors
- Requires panel tap machining service (pg. 10-45)

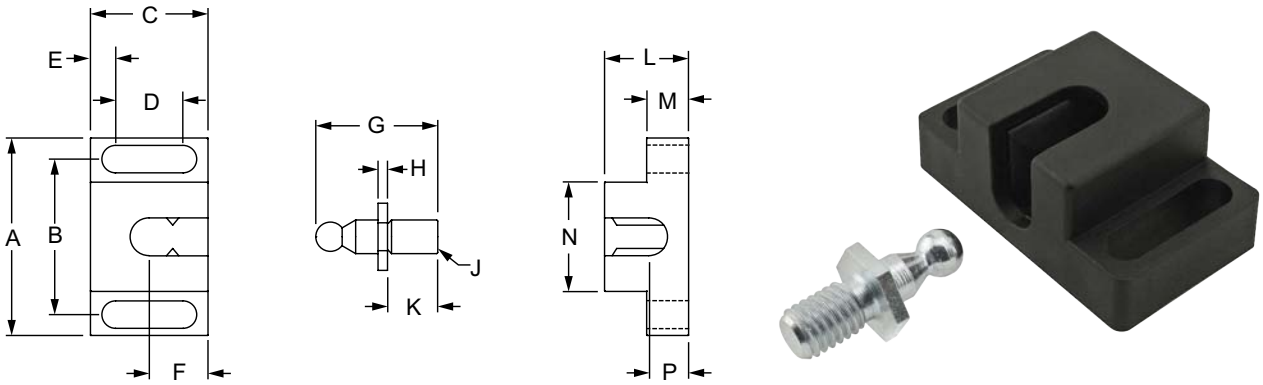

Part No.	Series	A	B	C	D	E	F	G	H	J	K	L	M	N	P	Weight
4487	10 15	1.890"	1.457"	1.102"	.630"	.236"	.512"	1.110"	.087"	M8 x 1.25	.472"	.787"	.394"	.984"	.335"	.062 lb
65-4487	25 30 40	48.00mm	37.00mm	28.00mm	16.00mm	6.00mm	13.00mm	28.20mm	2.20mm	M8 x 1.25	12.00mm	20.00mm	10.00mm	25.00mm	8.50mm	.0281 kg

Material Specifications

Material	Process	Color
Nylon PA	Injection Molded	Black

Required Machining Services

Machining Type	Part Machined	Reference Page
Drill Thru Tap	Panel	10-45

Suggested Hardware (Mount to T-Slot)

Part No.	Series	Qty.	Bolt	T-Nut
3493	10	2	1/4-20 x 5/8" SHCS	Economy
3304	15	2	1/4-20 x 3/4" SHCS	Economy
75-3522	25 30	2	M6 x 16mm SHCS	Economy
75-3596	40	2	M6 x 18mm SHCS	Drop-In

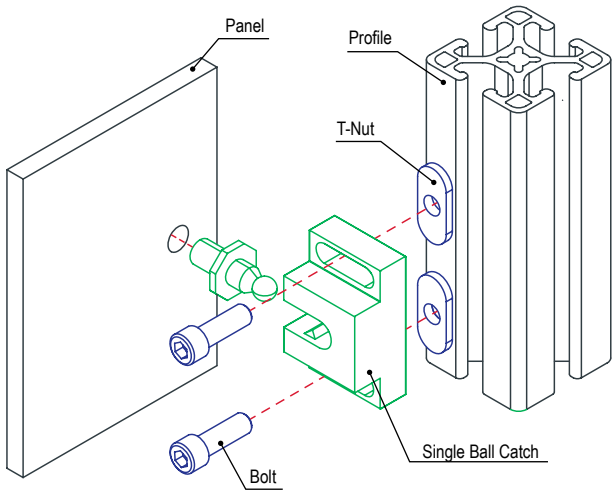

80/20 BUILD YOUR IDEA
More on 80/20® products available at 8020.net

Double Ball Catch

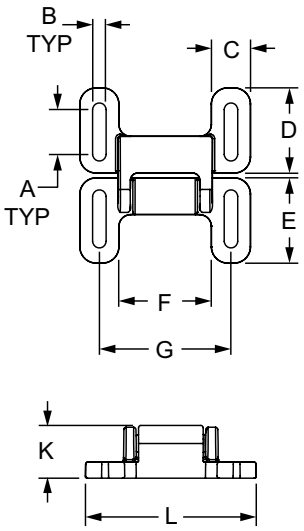

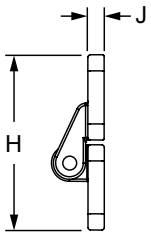

Part No.	Series	A	B	C	D	E	F	G	H	J	K	L	Weight
12019	10 15 25 30 40 45	19.50mm	5.44mm	17.00mm	37.00mm	37.00mm	40.00mm	57.00mm	76.00mm	7.00mm	22.87mm	73.90mm	.0410 kg

Material Specifications

Material	Process	Color
Nylon	Injection Molded	Black

Suggested Hardware (Mount to T-Slot)

Series	Qty.	Part No.	Qty.	Part No.	Qty.	Part No.
10 25	4	11-5314	4	25-1951	4	11-6040
15	4	13-5516	4	13116	4	13-6040
30	4	13-5512	4	13115	4	13-6040
40	4	13-5520	4	13116	4	13-6040
45	4	13-5520	4	13127	4	13-6040

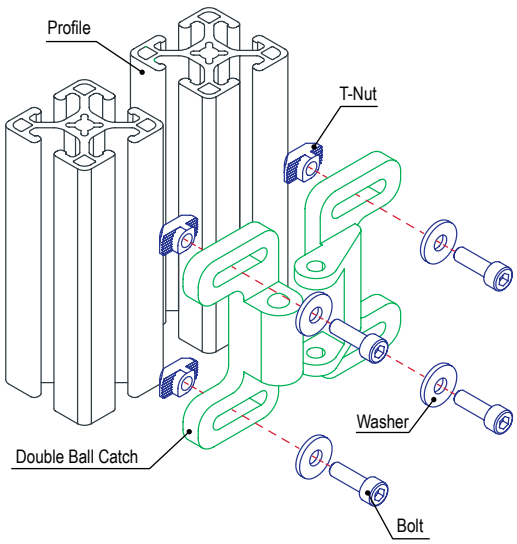

Panels & Doors

Tension Ball Latch

- Mounting hardware included
- No machining required

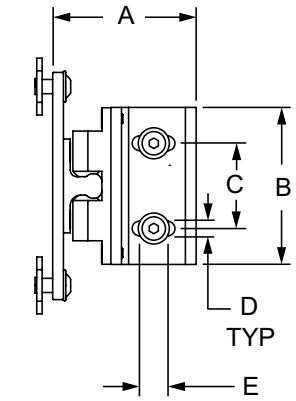

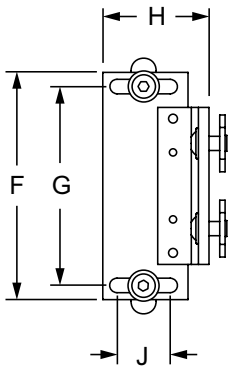

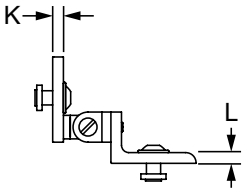

Part No.	Series	Color	A	B	C	D	E	F	G	H	J	K	L	Weight
2134	15 30 40 45	Clear	2.523"	2.764"	1.500"	.257"	.500"	4.000"	3.500"	1.871"	.938"	.188"	.188"	.439 lb
2134-Black	15 30 40 45	Black	2.523"	2.764 "	1.500"	.257"	.500"	4.000"	3.500"	1.871"	.938"	.188"	.188"	.439 lb

Material Specifications

Material	Alloy	Finish
Aluminum	6005A – T61	Anodize

Included Hardware (Mount to T-Slot)

Part No.	Series	Qty.	Description
3342	15 30 40	4	1/4-20 x 1/2" FBHSCS
3382	15 30 40	4	Slide-In Economy T-Nut

Suggested Hardware (Mount to T-Slot)

Part No.	Series	Qty.	Bolt
13-6316	45	4	M6 x 16mm BHSCS
13129	45	4	Standard Drop-In T-Nut

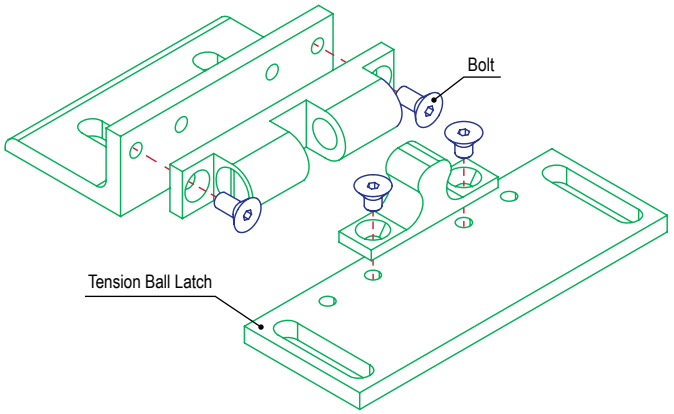

80/20 BUILD YOUR IDEA
More on 80/20® products available at 8020.net

Sliding Door Lock

- Locks .250” (6.35mm) sliding panels
- Security lock is keyed; multiple quantities keyed alike

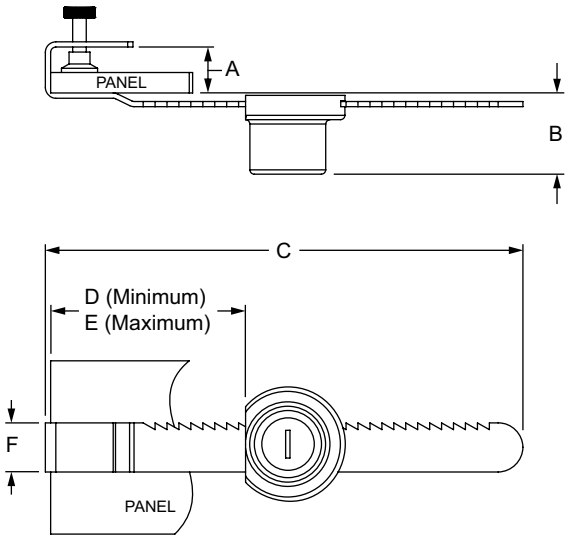

Part No.	Series	Material	Finish	A	B	C	D	E	F	Weight
2057	F M	Steel	Chrome	.500”	.938”	5.500”	1.250”	4.500”	.567”	.210 lb
65-2057				12.70mm	23.81mm	139.70mm	31.75mm	114.30mm	14.40mm	.1006 kg

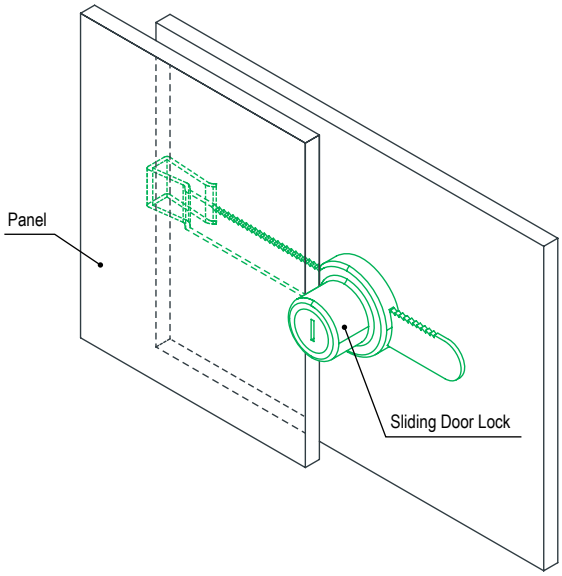

Panels & Doors

Panel Stiffener

- Used to add rigidity to .236" (6mm) thick panels
- Available in stock length of 72.5 inches (1841.5mm) and custom lengths (pg. 9-20)
- Connects using soft face mallet (pg. 11-6)

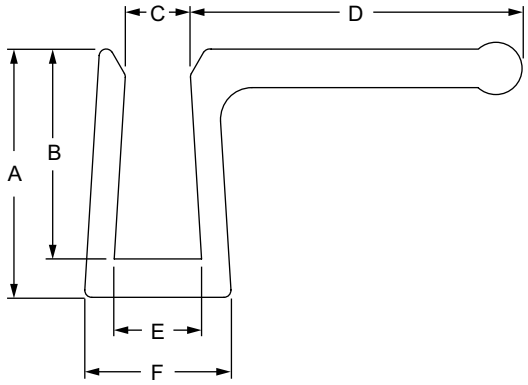

2424, 65-2424

2429, 65-2429

Part No.	Series	A	B	C	D	E	F	Stock Length	Weight
2424	F M	.710"	.600"	.182"	—	.245"	.417"	72.500"	1.015 lb
2429		.710"	.600"	.182"	.953"	.245"	.420"	72.500"	1.813 lb
65-2424		18.03mm	15.24mm	4.62mm	—	6.22mm	10.59mm	1841.50mm	.4604 kg
65-2429		18.03mm	15.24mm	4.62mm	24.21mm	6.22mm	10.67mm	1841.50mm	.8224 kg

Material Specifications

Material	Alloy	Finish	Process
Aluminum	6005A – T61	Clear Anodize	Extruded

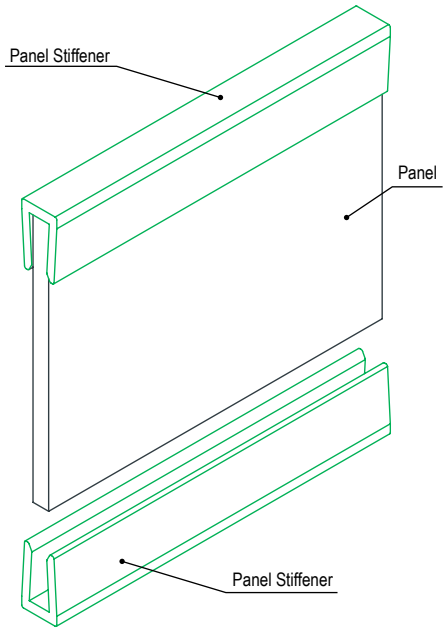

80/20 BUILD YOUR IDEA
More on 80/20® products available at 8020.net

Standard Panel Gasket

- Recommended for .236" (6mm) thick panels
- Use edge radius machining service (pg. 10-27) for easy insertion in the T-slot

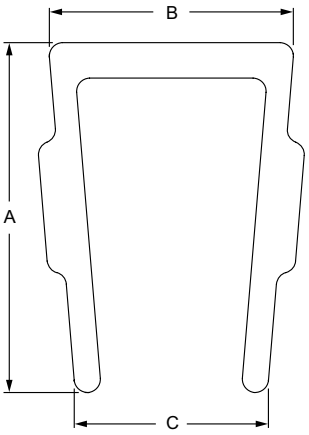

Part No.	Series	Material	Process	Color	A	B	C	Length	Weight
2120	15	Polypropylene	Extruded	Black	.469"	.327"	.260"	72.500"	.118 lb
40-2120	40				11.90mm	8.31mm	6.61mm	1841.50mm	.0547 kg

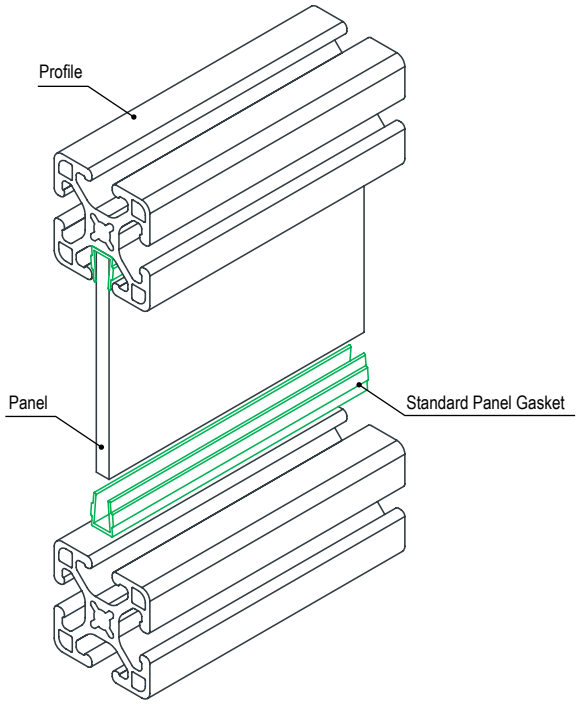

Panels & Doors

Economy Panel Gasket

- Recesses in T-slot to secure plastic panels and plates
- Sold by foot (meter) or in 150 foot (45.7 meter) rolls
- Cut ends at 45 degree angle for corner connections

2115

2178

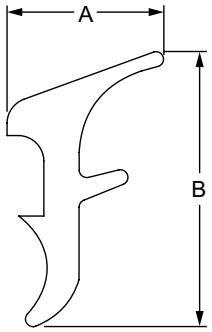

2177

2116

Part No.	Series	Material	Finish	Process	Color	A	B	Length	Weight
2116	10	Thermoplastic Elastomer	Gloss	Extruded	Black	.208"	.362"	per foot	.011 lb/ft
2118	10	Thermoplastic Elastomer			Black	.208"	.362"	per 150 foot roll	2.377 lb
2177	10	Silicone Rubber			Gray	.208"	.362"	per foot	.016 lb/ft
2115	15	Thermoplastic Elastomer			Black	.311"	.547"	per foot	.022 lb/ft
2117	15	Thermoplastic Elastomer			Black	.311"	.547"	per 150 foot roll	4.027 lb
2178	15	Silicone Rubber			Gray	.311"	.547"	per foot	.028 lb/ft
14157	20	Thermoplastic Elastomer			Black	5.80mm	7.60mm	per meter	.0148 kg/m
25-2116	25	Thermoplastic Elastomer			Black	5.28mm	9.19mm	per meter	.0148 kg/m
25-2118	25	Thermoplastic Elastomer			Black	5.28mm	9.19mm	per 45.7 meter roll	1.0218 kg
25-2177	25	Silicone Rubber			Gray	5.28mm	9.19mm	per meter	.0247 kg/m
40-2115	30 40	Thermoplastic Elastomer			Black	7.90mm	13.89mm	per meter	.0370 kg/m
40-2117	30 40	Thermoplastic Elastomer			Black	7.90mm	13.89mm	per 45.7 meter roll	1.8985 kg
40-2178	40	Silicone Rubber			Gray	7.90mm	13.89mm	per meter	.0018 kg/m
14160	45	Thermoplastic Elastomer			Black	11.13mm	19.40mm	per meter	.0018 kg/m

Recommended Panel Thickness

Series	Panel Thickness
10	.177" / 4.50mm
15	.220" - .236" / 6.00mm
20	.118" / 3.00mm
25	.177" / 4.50mm
30	.220" - .236" / 6.00mm
40	.220" - .236" / 6.00mm
45	.220" - .236" / 6.00mm

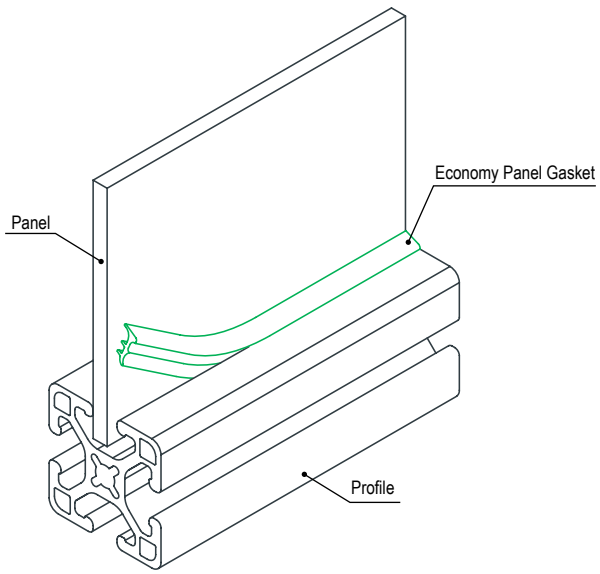

80/20 BUILD YOUR IDEA
More on 80/20® products available at 8020.net

Rubber Door Seal

- Keyed pad that presses into T-slot
- Sold by the foot or in 100 foot rolls
- Minimum door gap of .250" (6.35mm) is required

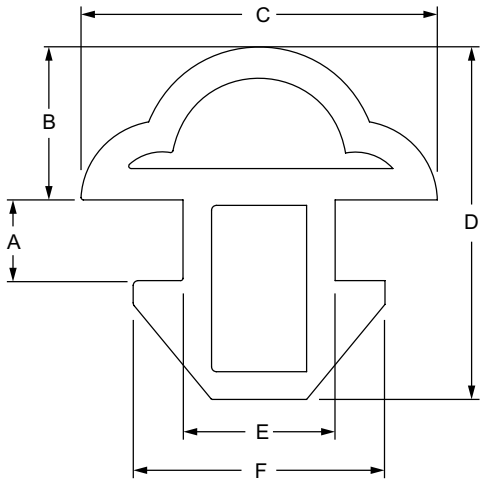

Part No.	Series	Material	Finish	Process	A	B	C	D	E	F	Length	Weight
2829	15 40	Thermoplastic Elastomer	Matte Black	Extruded	.170"	.322"	.750"	.742"	.320"	.530"	per foot	.090 lb / ft
2834					.170"	.322"	.750"	.742"	.320"	.530"	per 100 foot roll	8.393 lb / 100 ft

Material Specifications

Material	Finish	Process
Thermoplastic Elastomer	Matte	Extruded

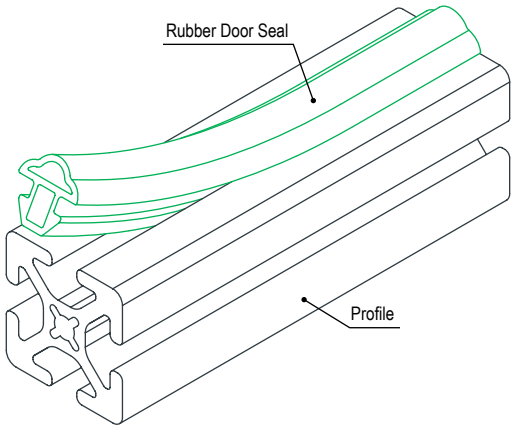

Panels & Doors

Wire Edge Cover

- Crimps on edge of wire mesh or expanded metal panels
- Sold by foot or meter

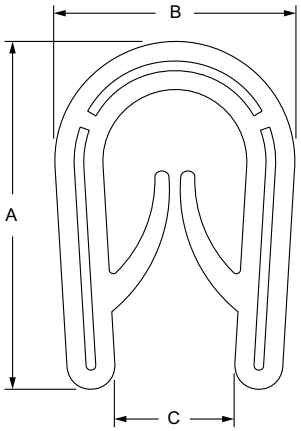

Part No.	Series	Material	Finish	Process	Color	A	B	C	Length	Max Length	Weight
2465	F M	PVC / Aluminum	Pebble Finish	Co-Extrusion	Black	.545"	.357"	.187"	per foot	250 foot roll	.194 lb / ft
65-2465						13.84mm	9.07mm	4.75mm	per meter	76.2 meter roll	.1050 kg / m

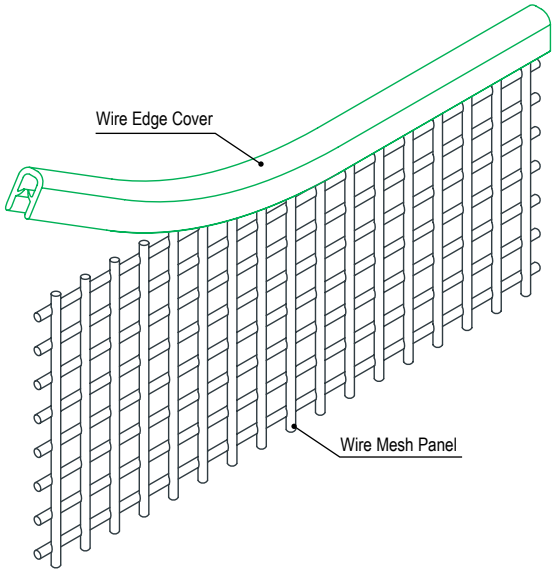

80/20 BUILD YOUR IDEA
More on 80/20® products available at 8020.net

Aluminum Door Stop

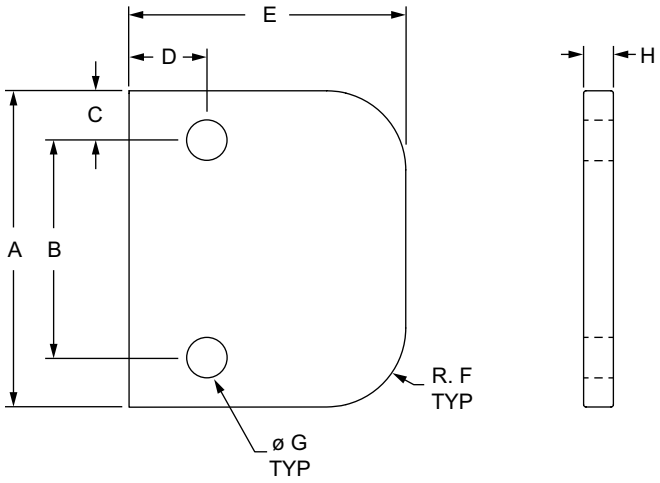

Part No.	Series	Material	Alloy	Finish	A	B	C	D	E	F	G	H	Weight
4483	10 15 25 30 40 45	Aluminum	6005A – T61	Clear Anodize	2.000"	1.375"	.313"	.492"	1.750"	.500"	.257"	.188"	.066 lb
4483-Black				Black Anodize	2.000"	1.375"	.313"	.492"	1.750"	.500"	.257"	.188"	.066 lb

Suggested Hardware (Mount to T-Slot)

Series	Part No.	Qty.	Bolt	T-Nut	Qty.	T-Nut
10	3061	2	1/4-20 x 1/2" BHSCS	3376	2	Roll-in
15	3063	2	1/4-20 x 5/8" BHSCS	3933	2	Drop-in
25	11-6310	2	M6 x 10mm BHSCS	25-1966	2	Roll-in
30	11-6312	2	M6 x 12mm BHSCS	13117	2	Drop-in
40	11-6316	2	M6 x 16mm BHSCS	13119	2	Drop-in
45	11-6316	2	M6 x 16mm BHSCS	13129	2	Drop-in

Panels & Doors

Nylon Door Stop

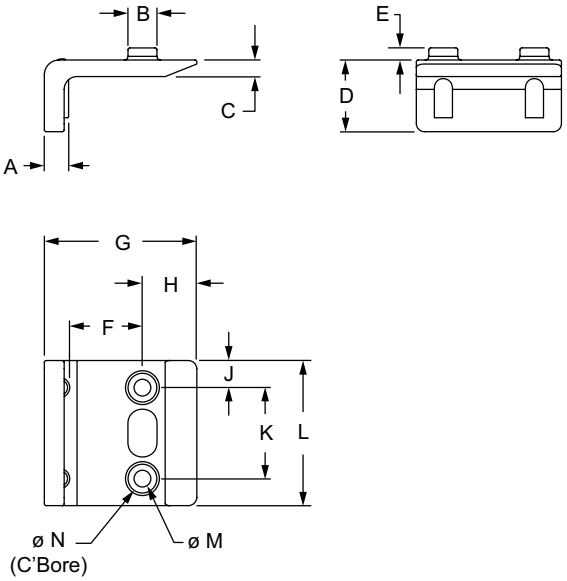

Part No.	Series	Material	Color	A	B	C	D	E	F	G	H	J	K	L	M	N	Weight
2021	15 40	Nylon	Black	.260"	.310"	.177"	.768"	.130"	.780"	1.634"	.582"	.289"	.976"	1.555"	.177"	.307" x .118" DEEP	.280 lb

Suggested Hardware (Mount to T-Slot)

Series	Part No.	Qty.	Bolt	Part No.	Qty.	T-Nut
15 40	11-4312	2	M4 x 12mm BHSCS	25-1941	2	Slide-in

80/20 BUILD YOUR IDEA
More on 80/20® products available at 8020.net

Building the Base

Page 5-2

Considering Capacity

Page 5-2

Caster Options

Page 5-3

Feet/Glide Options
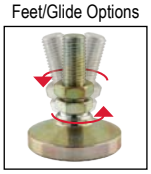
Page 5-3

Added Stability with Base Plates

Page 5-3

Casters, Leveling Feet and Base Plates

Threaded Stem Swivel Caster

Page 5-4

Furniture Style Caster

Page 5-5

Flanged Mount Swivel Caster

Page 5-6

Flanged Mount Rigid Caster

Page 5-8

Triangular Top Plate Caster

Page 5-9

Deluxe Flange Mount Swivel Caster

Page 5-10

Deluxe Flange Mount Rigid Caster

Page 5-11

Heavy-Duty Flange Mount Swivel Caster

Page 5-12

Heavy-Duty Flange Mount Rigid Caster

Page 5-13

High-Capacity Swivel Caster

Page 5-14

High-Capacity Rigid Caster

Page 5-15

Leveling Caster

Page 5-16

Adjustable Position Floor Lock

Page 5-17

Standard Floor Glide

Page 5-18

Economy Floor Glide

Page 5-19

Large Base Glide

Page 5-20

Anti-Vibration Leveling Foot

Page 5-21

Economy Anti-Vibration Mount

Page 5-22

Deluxe Leveling Foot

Page 5-23

Economy Leveling Foot

Page 5-24

Swivel Foot Base

Page 5-25

Swivel Foot Base with Mount Holes

Page 5-25

Swivel Foot Threaded Stem

Page 5-26

Swivel Foot Extended Base

Page 5-27

Swivel Foot Trapezoid Base
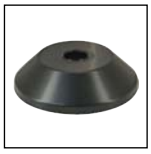
Page 5-28

Trapezoid Base Anchor

Page 5-29

Wedge Floor Anchor

Page 5-30

Die-Cast Floor Bracket

Page 5-31

Adjustable Die-Cast Floor Bracket

Page 5-32

Steel Floor Bracket

Page 5-33

Aluminum Floor Bracket

Page 5-34

Threaded End Bracket

Page 5-35

Flange Mount Caster Base Plate

Page 5-36

Heavy-Duty Flange Mount Caster Base Plate

Page 5-37

Leveling Caster Base Plate

Page 5-38

Position Floor Lock Base Plate

Page 5-39

3 Hole - Center Tap Base Plate

Page 5-40

5 Hole - Center Tap Base Plate

Page 5-42

4 Hole - Offset Tap Base Plate

Page 5-44

2 Hole - Leveling Anchoring Base Plate

Page 5-45

4 Hole - Leveling Anchoring Base Plate
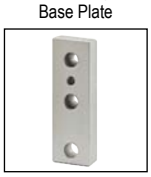
Page 5-46

6 Hole - Leveling Anchoring Base Plate
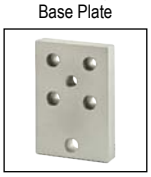
Page 5-47

Floor Mount Base Plate
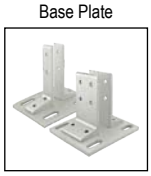
Page 5-48

Economy Floor Mount Base Plate

Page 5-50

Slotted Economy Floor Mount Base Plate

Page 5-52

Casters & Feet

Building the Base

Once you've got your design narrowed down it's time to start thinking about your base. There are several varieties available, from casters to furniture glides, leveling feet, or anchors. Some add movement and provide a swivel or a pivot, while others lock or reduce vibration. There are also feet that do just what their name implies; level or anchor your project. You can also choose from options that provide combinations of these features.

Mobile

Stationary

Anchored

You'll want to consider how often your application will need to be in motion or relocated. For example, work carts are constantly moving and turning while furniture only occasionally needs repositioned. In contrast, a guard or larger machine may never need moved or only very infrequently. There may also be a need to immobilize equipment. Determining the frequency of movement will help you decide if you need a caster, a leveling foot, a glide or perhaps a floor lock or anchor.

Consider the Capacity

After you've decided on the type of foot that works best for your project, you'll want to begin narrowing down your product choices. One of the main factors will be the required load capacity. Keep in mind that the ratings are per foot; if you're using multiple bases the weight will be distributed and provide a higher overall capacity.

Find Your Footing

Casters, glides, bases, leveling feet and anchors are a great way to customize your application and design it to fit your specific space and purpose. There are several added features to choose from.

Caster Options

When using a caster, there are options available that swivel or remain rigid. Some of the casters also include locking mechanisms. The leveling caster is a great combination foot that incorporates both mobility and leveling features with one component.

The threaded stem swivel caster is one of many casters with or without brakes that 80/20 offers.

Leveling Feet, Glide Options

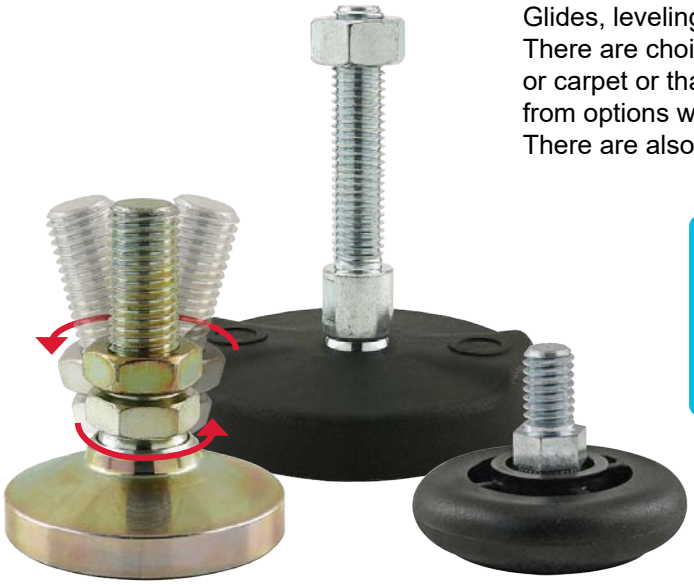

Glides, leveling feet and bases come in a wide range of varieties. There are choices suitable for different surfaces such as concrete or carpet or that provide leveling and shock-resistance. Select from options with a pad that help reduce and absorb vibration. There are also heavier and lighter-duty bases to pick from.

Options include feet that are both resistant to vibration and pivot up to 20 degrees to accommodate uneven floors.

Add Stability with a Base Plate

Many feet mount to the profile using a base plate. There are several plates available; this allows you to mount your foot anywhere along the profile T-slot or end, reducing limitations on where you can position the foot.

There are also alternatives that let you attach a foot directly to the profile end without the need for a base plate. You'll want to keep in mind that the profile will require an end tap.

Casters & Feet

Threaded Stem Swivel Caster

- Mounts directly to T-slot profile end or to profile side using base plate (pg. 5-40)
- Profile end mounting requires end tap machining service (pg. 10-3)

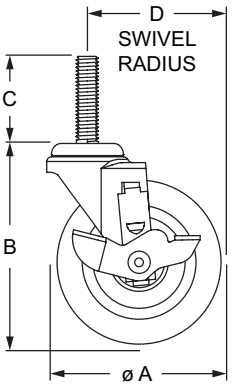

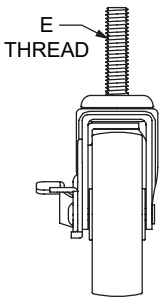

Side Brake

Top Brake

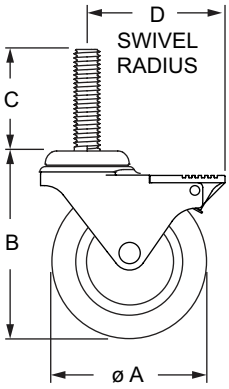

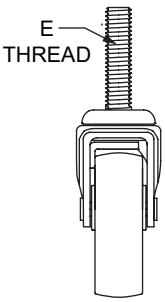

Part No.	Series	Material	Finish	Color	Brake	A	B	C	D	E	Load Height	Load Capacity	Weight
2298		Steel / Soft Rubber	Zinc	Black	None	1.625"	2.313"	1.500"	1.625"	3/8-16	2.313"	70.00 lb	.265 lb
2299		Steel / Soft Rubber			Top	2.000"	2.531"	1.500"	1.812"	3/8-16	2.531"	70.00 lb	.444 lb
2300		Steel / Soft Rubber			Side	3.000"	3.531"	1.500"	2.375"	3/8-16	3.531"	100.00 lb	.585 lb
2310	F RT	Steel / Soft Rubber			Side	4.000"	4.531"	1.500"	3.250"	7/16-14	4.531"	125.00 lb	1.263 lb
2305		Steel / Hard Rubber			Side	4.000"	4.531"	1.500"	3.250"	7/16-14	4.531"	140.00 lb	1.596 lb
2306		Steel / Soft Rubber			Side	5.000"	5.531"	1.500"	3.875"	7/16-14	5.531"	125.00 lb	1.641 lb
2307		Steel / Hard Rubber			Side	5.000"	5.531"	1.500"	3.875"	7/16-14	5.531"	145.00 lb	1.641 lb
65-2340		Steel / Soft Rubber			None	35.00mm	50.00mm	30.00mm	41.27mm	M10 x 1.5	50.00mm	34.02 kg	.1481 kg
65-2341		Steel / Soft Rubber			Top	50.00mm	64.30mm	30.00mm	50.80mm	M10 x 1.5	64.30mm	34.02 kg	.2021 kg
65-2342		Steel / Soft Rubber			Top	75.00mm	89.70mm	30.00mm	73.03mm	M10 x 1.5	89.70mm	45.36 kg	.3142 kg
65-2343	M RT	Steel / Soft Rubber			Top	100.00mm	115.10mm	30.00mm	82.55mm	M10 x 1.5	115.10mm	66.00 kg	.5480 kg
65-2344		Steel / Soft Rubber			Top	125.00mm	140.50mm	30.00mm	98.43mm	M10 x 1.5	140.50mm	68.00 kg	.7171 kg
65-2345		Steel / Hard Rubber			Top	100.00mm	115.10mm	30.00mm	82.55mm	M12 x 1.75	115.10mm	79.00 kg	.5715 kg
65-2346		Steel / Hard Rubber			Top	125.00mm	140.50mm	30.00mm	98.43mm	M12 x 1.75	140.50mm	79.00 kg	.7343 kg

Required Machining Services

Machining Type	Machined	Reference Page
End Tap	Mounting Profile	10-3

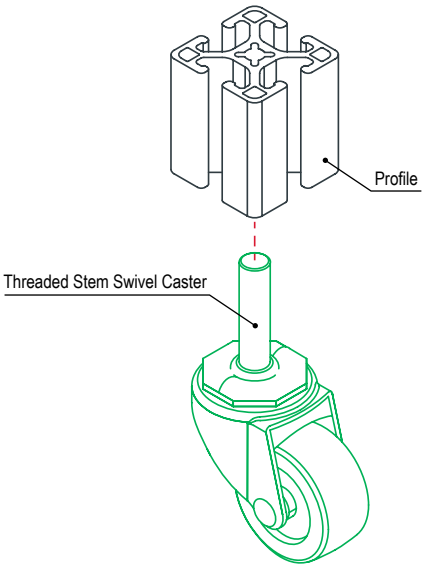

80/20 BUILD YOUR IDEA
More on 80/20® products available at 8020.net

Furniture Style Caster

- Mounts directly to T-slot profile end or to profile side using base plate (pg. 5-40)
- Quick Frame caster connects to tube profile using a connector (pg. 3-217)
- Profile end mounting requires end tap machining service (pg. 10-3)

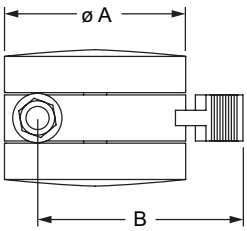

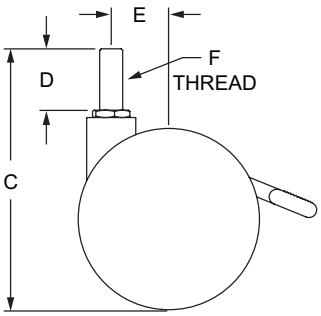

Without Brake 2291, 2293, 2295

With Brake 2292, 2294, 2296

Quick Frame 9361

Part No.	Series	Material	Color	Brake	A	B	C	D	E	F	Load Height	Load Capacity	Weight
2291	F	Steel / Nylon	Black	No	2.850"	—	4.250"	1.000"	.944"	3/8-16	3.250"	165.00 lb	.417 lb
2292				Yes	2.850"	3.660"	4.250"	1.000"	.944"	3/8-16	3.250"	165.00 lb	.468 lb
2293				No	3.930"	—	5.375"	1.000"	1.370"	3/8-16	4.375"	175.00 lb	.726 lb
2294				Yes	3.930"	4.880"	5.375"	1.000"	1.370"	3/8-16	4.375"	175.00 lb	.722 lb
2295				No	4.920"	—	6.437"	1.000"	1.370"	1/2-13	5.438"	180.00 lb	1.091 lb
2296				Yes	4.920"	5.750"	6.437"	1.000"	1.370"	1/2-13	5.438"	180.00 lb	1.172 lb
9361	QF			No	2.394"	—	3.725"	.984"	.827"	—	2.741"	130.00 lb	.246 lb

Required Machining Services

Machining Type	Machined	Reference Page
End Tap	Mounting Profile	10-3

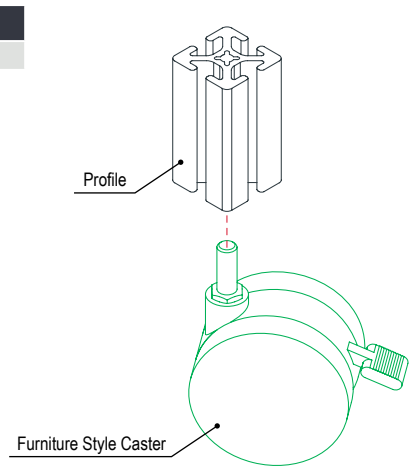

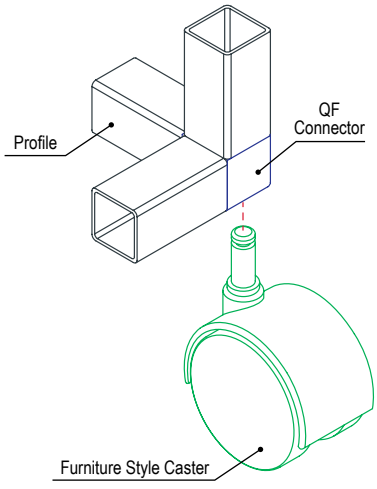

Casters & Feet

Flanged Mount Swivel Caster

- Mounts directly to T-slot profile end or to profile side using base plate (pg. 5-36)
- Available with side or front mount brake kit; front brake locks both wheel and swivel motion

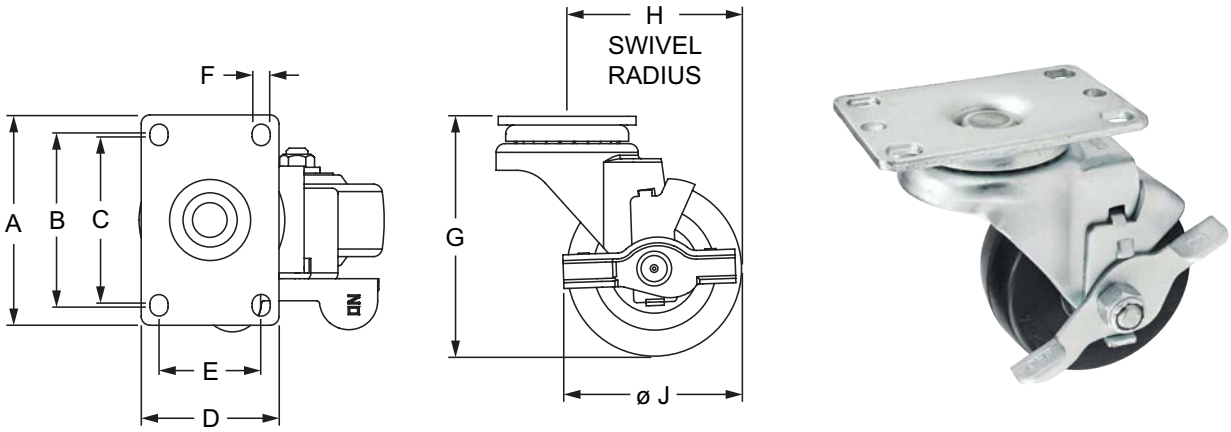

Part No.	Series	Brake	A	B	C	D	E	F	G	H	J	Load Height	Load Capacity	Weight
2317	F RT	Side	3.625"	3.000"	2.875"	2.375"	1.750"	.328"	4.125"	3.000"	3.000"	4.125"	150.00 lb	1.725 lb
2318			3.625"	3.000"	2.875"	2.375"	1.750"	.328"	4.125"	3.000"	3.000"	4.125"	200.00 lb	1.740 lb.
65-2317	M RT		92.08mm	76.20mm	73.03mm	60.33mm	44.45mm	8.33mm	104.78mm	76.20mm	92.08mm	104.78mm	68.04 kg	.7668 kg
65-2318			92.08mm	76.20mm	73.03mm	60.33mm	44.45mm	8.33mm	104.78mm	76.20mm	92.08mm	104.78mm	90.72 kg	.7790 kg

Material Specifications

Part No.	Material	Finish	Color
2317	Steel / Soft Rubber	Zinc	Black
2318	Steel / Hard Rubber		
65-2317	Steel / Soft Rubber		
65-2318	Steel / Hard Rubber		

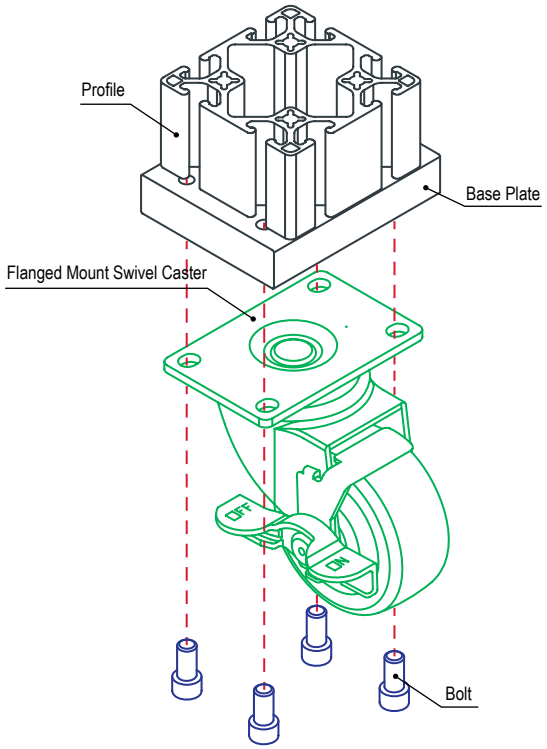

Suggested Hardware (Mount to Base Plate)

Part No.	Series	Qty.	Bolt
3110	F	4	5/16-18 x 5/8" SHCS
13-8520	M	4	M8 x 20mm SHCS

Suggested Hardware (Mount to Ready Tube)

Part No.	Series	Qty.	Bolt Assembly
3960	RT	2	5/16-18 x 2.00" Flange Hex Head Bolt & Flanged Hex Nut

80/20 BUILD YOUR IDEA
More on 80/20® products available at 8020.net

Flanged Mount Swivel Caster (Continued)

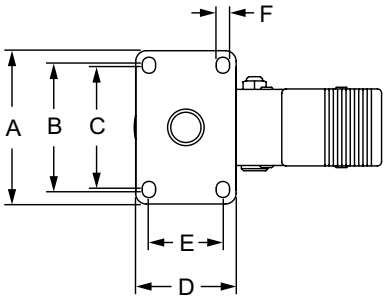

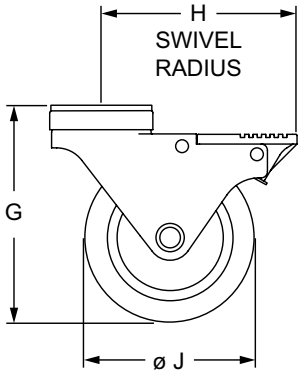

Part No.	Series	Brake	A	B	C	D	E	F	G	H	J	Load Height	Load Capacity	Weight
2321	F RT	Front	3.625"	3.000"	2.875"	2.375"	1.750"	.328"	5.125"	4.625"	4.000"	5.125"	255.00 lb	1.939 lb
2323	F RT	Front	3.625"	3.000"	2.875"	2.375"	1.750"	.328"	6.250"	4.625"	5.000"	6.250"	280.00 lb	2.202 lb
65-2321	M RT	Front	92.08mm	76.20mm	73.03mm	60.33mm	44.45mm	8.33mm	133.18mm	117.48mm	101.60mm	133.18mm	115.67 kg	.8743 kg
65-2323	M RT	Front	92.08mm	76.20mm	73.03mm	60.33mm	44.45mm	8.33mm	155.58mm	117.48mm	127.00mm	158.45mm	127.01 kg	1.0115 kg

Material Specifications

Material	Finish	Color
Steel / Soft Rubber	Zinc	Gray

Suggested Hardware (Mount to Base Plate)

Part No.	Series	Qty.	Bolt
3110	F	4	5/16-18 x 5/8" SHCS
13-8520	M	4	M8 x 20mm SHCS

Suggested Hardware (Mount to Ready Tube)

Part No.	Series	Qty.	Bolt Assembly
3960	RT	2	5/16-18 x 2.00" Flange Hex Head Bolt & Flanged Hex Nut

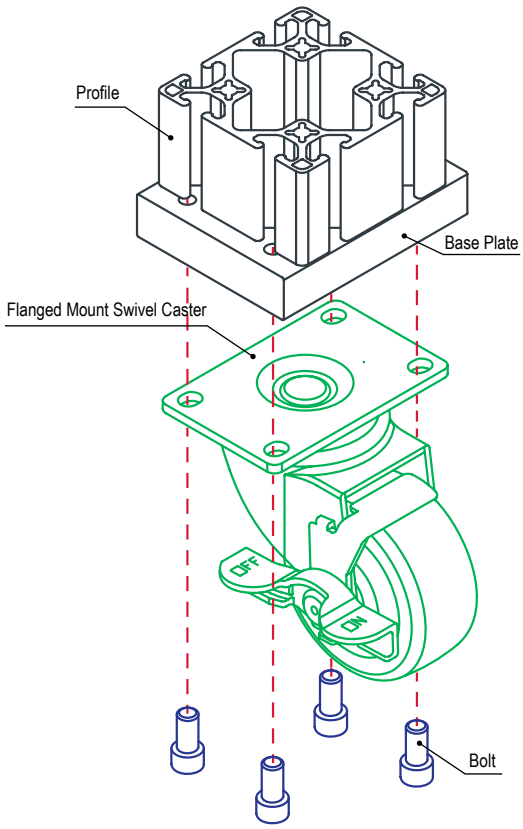

Casters & Feet

Flange Mount Rigid Caster

- Mounts directly to T-slot profile end or to profile side using base plate (pg. 5-36)
- Used in conjunction with swivel casters to create applications that easily pivot

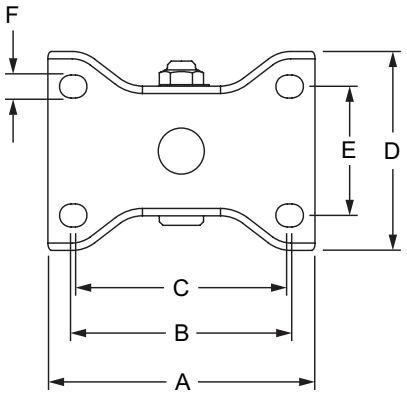

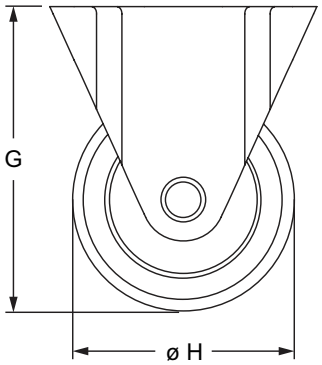

Part No.	Series	A	B	C	D	E	F	G	H	Load Height	Load Capacity	Weight
2311	10 15 RT	3.625"	3.000"	2.875"	2.700"	1.750"	.313"	4.125"	3.000"	4.125"	220.00 lb	1.055 lb
2312		3.625"	3.000"	2.875"	2.700"	1.750"	.313"	4.125"	3.000"	4.125"	150.00 lb	1.057 lb
2314		3.625"	3.000"	2.875"	2.700"	1.750"	.313"	5.125"	4.000"	5.125"	255.00 lb	1.151 lb
2316		3.625"	3.000"	2.875"	2.700"	1.750"	.313"	6.250"	5.000"	6.250"	280.00 lb	1.411 lb
65-2312	25 40 RT	92.08mm	76.20mm	73.03mm	68.58mm	44.45mm	7.94mm	104.78mm	76.20mm	104.78mm	68.04 kg	.4781 kg
65-2314		92.08mm	76.20mm	73.03mm	68.58mm	44.45mm	7.94mm	130.18mm	101.60mm	130.18mm	115.67 kg	.5130 kg
65-2316		92.08mm	76.20mm	73.03mm	68.58mm	44.45mm	7.94mm	158.75mm	127.00mm	136.36mm	127.01 kg	.6482 kg

Material Specifications

Part No.	Material	Finish	Color
2311	Steel / Soft Rubber	Zinc	Black
2312	Steel / Hard Rubber		Black
2314	Steel / Soft Rubber		Gray
2316	Steel / Soft Rubber		Gray
65-2312	Steel / Hard Rubber		Black
65-2314	Steel / Soft Rubber		Gray
65-2316	Steel / Soft Rubber		Gray

Suggested Hardware (Mount to Base Plate)

Part No.	Series	Qty.	Bolt
3110	10 15	4	5/16-18 x 5/8" SHCS
13-8520	25 40	4	M8 x 20mm SHCS

Suggested Hardware (Mount to Ready Tube)

Part No.	Series	Qty.	Bolt Assembly
3960	RT	2	5/16-18 x 2.00" Flange Hex Head Bolt & Flanged Hex Nut

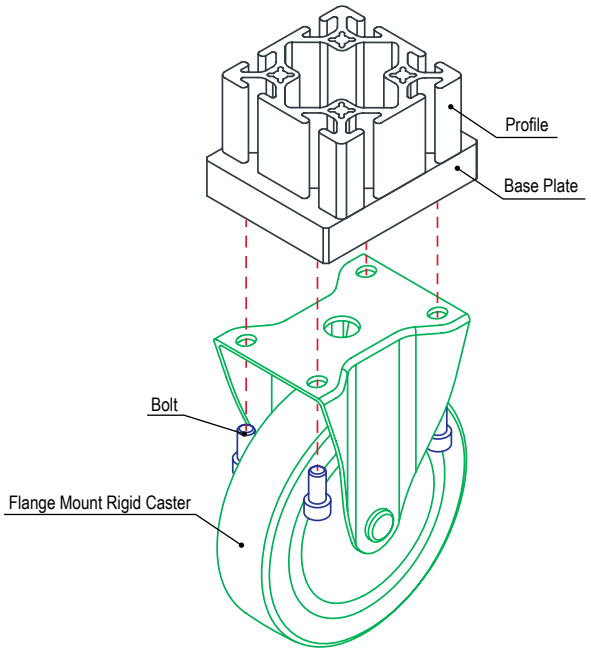

80/20 BUILD YOUR IDEA
More on 80/20® products available at 8020.net

Triangular Top Plate Caster

- Mounts directly to T-slot profile without a base plate
- Slotted holes allow for easy positioning along the profile
- Locking tab stops the wheel and swivel rotation

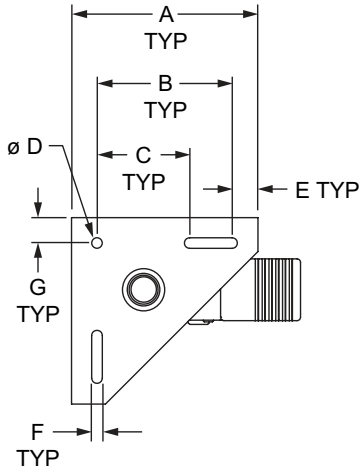

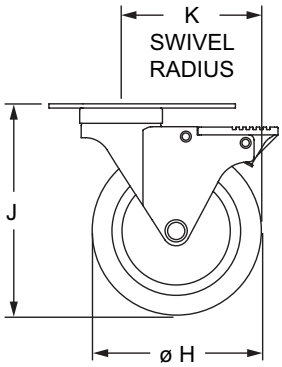

Part No.	Series	A	B	C	D	E	F	G	H	J	K	Load Height	Load Capacity	Weight
2337	15	5.500"	4.000"	2.750"	.313"	.766"	.313"	.750"	4.000"	5.125"	4.625"	5.125"	250.00 lb	2.413 lb
2338		5.500"	4.000"	2.750"	.313"	.766"	.313"	.750"	5.000"	6.250"	4.625"	6.250"	300.00 lb	2.664 lb
65-2337	30 40 45	139.70mm	101.60mm	69.85mm	7.95mm	19.46mm	7.95mm	19.05mm	101.60mm	130.18mm	117.48mm	130.18mm	113.64 kg	1.0890 kg
65-2338		139.70mm	101.60mm	69.85mm	7.95mm	19.46mm	7.95mm	19.05mm	127.00mm	158.75mm	117.48mm	158.75mm	136.36 kg	1.2252 kg

Material Specifications

Material	Finish	Color
Steel / Soft Rubber	Zinc	Gray

Suggested Hardware (Mount to T-Slot)

Part No.	Series	Qty.	Bolt	T-Nut
3462	15	3	5/16-18 x 5/8" SHCS, Washer	Economy
75-3620	30	3	M8 x 12mm SHCS	Slide-In
75-3625	40	3	M8 x 16mm SHCS	Slide-In
75-3623	45	3	M8 x 16mm SHCS	Drop-In

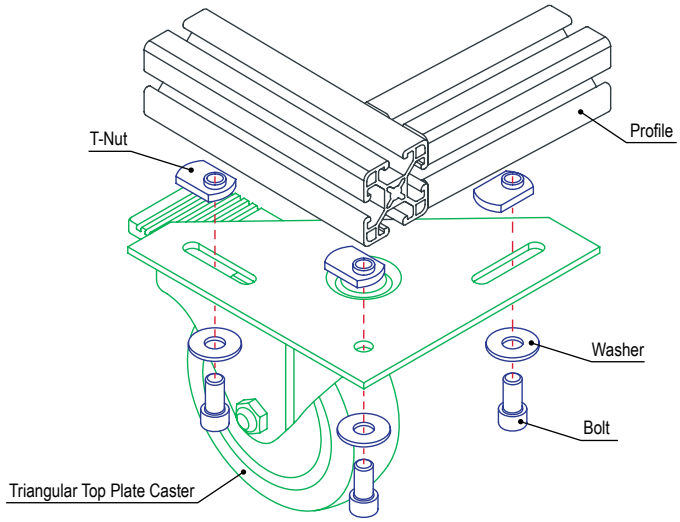

Casters & Feet

Deluxe Flange Mount Swivel Caster

- Mounts directly to T-slot profile end or to profile side using base plate (pg. 5-36)
- Polyurethane wheels and hardened raceways provide smooth motion with brake included
- Locking tab stops the wheel and swivel rotation

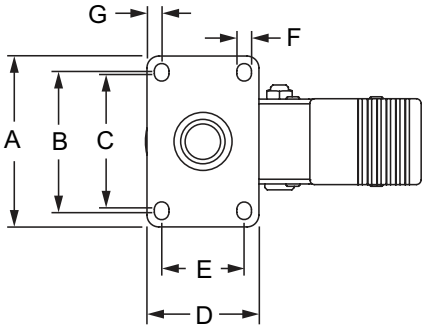

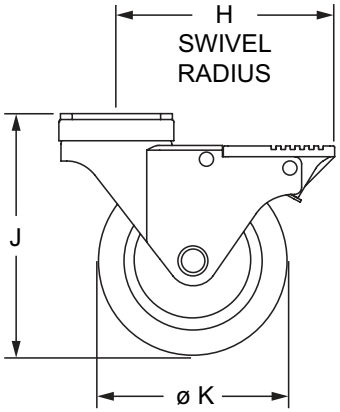

Part No.	Series	A	B	C	D	E	F	G	H	J	K	Load Height	Load Capacity	Weight
2333	F RT	3.625"	3.000"	2.875"	2.375"	1.750"	.328"	.313"	4.625"	5.125"	4.000"	5.125"	250.00 lb	1.997 lb
2334		3.625"	3.000"	2.875"	2.375"	1.750"	.328"	.313"	4.625"	6.250"	5.000"	6.250"	300.00 lb	2.229 lb
65-2333	M RT	92.08mm	76.20mm	73.03mm	60.33mm	44.45mm	8.33mm	7.94mm	117.48mm	130.18mm	101.60mm	130.18mm	113.64 kg	.9071 kg
65-2334		92.08mm	76.20mm	73.03mm	60.33mm	44.45mm	8.33mm	7.94mm	117.48mm	158.75mm	127.00mm	158.75mm	136.36 kg	1.0043 kg

Material Specifications

Material	Finish	Color
Steel / Polyurethane	Zinc	Black on Gray

Suggested Hardware (Mount to Base Plate)

Part No.	Series	Qty.	Bolt
3110	F	4	5/16-18 x 5/8" SHCS
11-8512	M	4	M8 x 12mm SHCS

Suggested Hardware (Mount to Ready Tube)

Part No.	Series	Qty.	Bolt Assembly
3960	RT	2	5/16-18 x 2.00" Flange Hex Head Bolt & Flanged Hex Nut

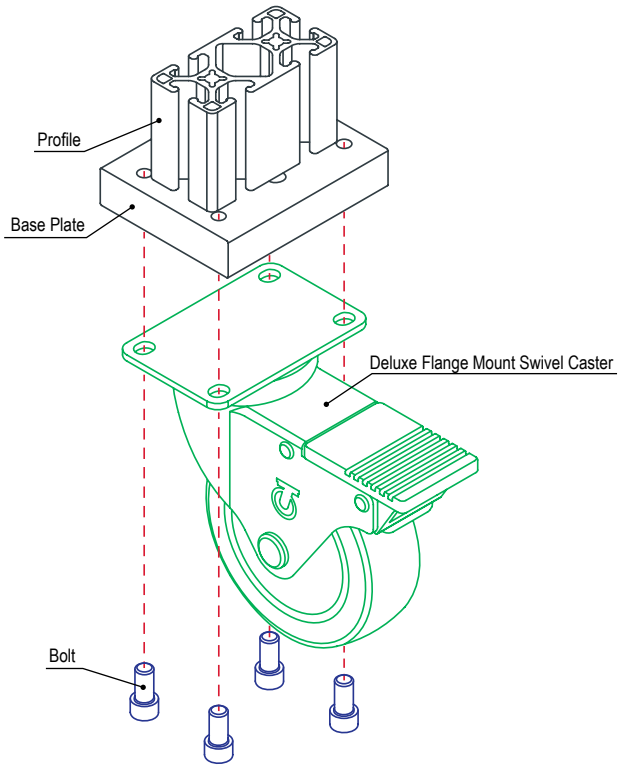

80/20 BUILD YOUR IDEA
More on 80/20® products available at 8020.net

Deluxe Flange Mount Rigid Caster

- Mounts directly to T-slot profile end or to profile side using base plate (pg. 5-36)
- Polyurethane wheels and hardened raceways provide smooth motion

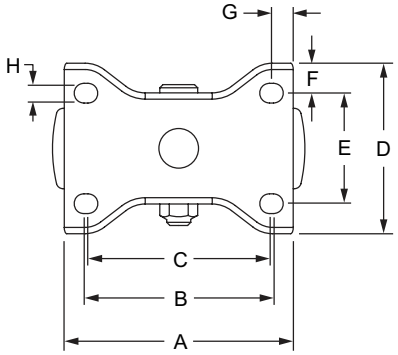

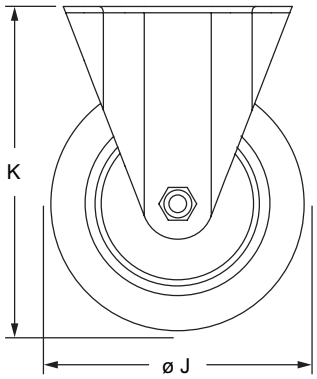

Part No.	Series	A	B	C	D	E	F	G	H	J	K	Load Height	Load Capacity	Weight
2335	F RT	3.625"	3.000"	2.875"	2.688"	1.750"	.469"	.313"	.328"	4.000"	5.125"	5.125"	300.00 lb	1.164 lb
2336		3.625"	3.000"	2.875"	2.688"	1.750"	.469"	.313"	.328"	5.000"	6.250"	6.250"	300.00 lb	1.386 lb
65-2335	M RT	92.08mm	76.20mm	73.03mm	68.28mm	44.45mm	11.91mm	7.94mm	8.33mm	101.60mm	130.18mm	130.18mm	113.64 kg	.5398 kg
65-2336		92.08mm	76.20mm	73.03mm	68.28mm	44.45mm	11.91mm	7.94mm	8.33mm	127.00mm	158.75mm	158.75mm	136.36 kg	.6299 kg

Material Specifications

Material	Finish	Color
Steel / Polyurethane	Zinc	Black on Gray

Suggested Hardware (Mount to Base Plate)

Part No.	Series	Qty.	Bolt
3110	F	4	5/16-18 x 5/8" SHCS
11-8512	M	4	M8 x 12mm SHCS

Suggested Hardware (Mount to Ready Tube)

Part No.	Series	Qty.	Bolt Assembly
3960	RT	2	5/16-18 x 2.00" Flange Hex Head Bolt & Flanged Hex Nut

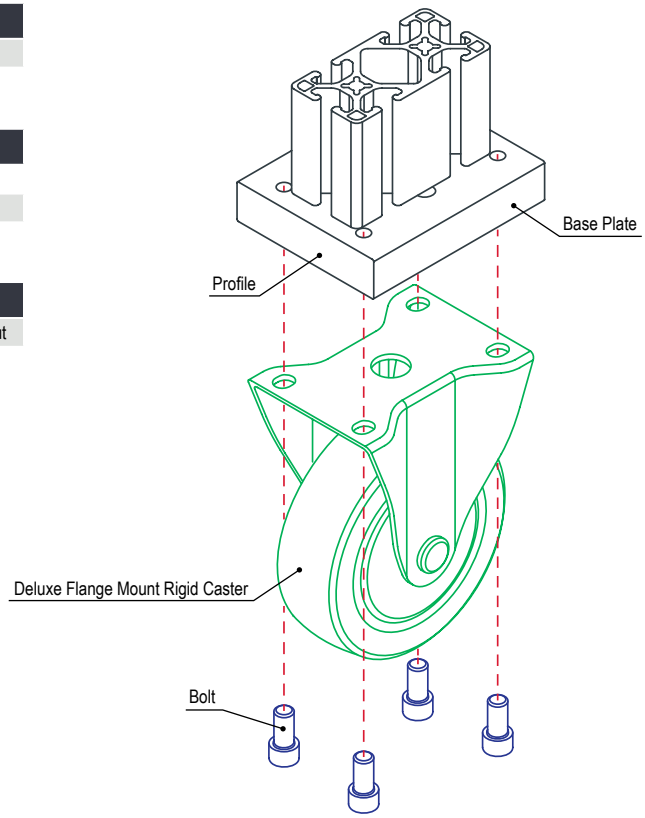

Casters & Feet

Heavy-Duty Flange Mount Swivel Caster

- Mounts to profile side using base plate (pg. 5-37)
- Quick access to lubrication fittings; oil resistant option with higher ground clearance

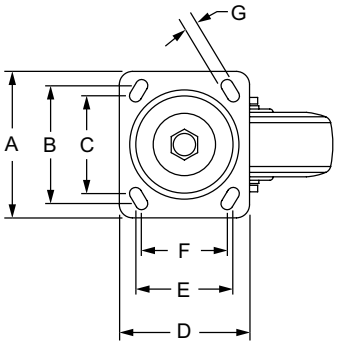

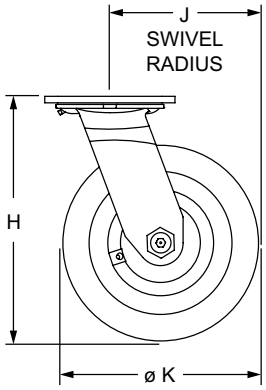

Part No.	Series	A	B	C	D	E	F	G	H	J	K	Load Height	Load Capacity	Weight
2700	F	4.500"	3.625"	3.000"	4.000"	3.000"	2.625"	.420"	6.500"	3.875"	5.000"	6.500"	375.00 lb	4.320 lb
2704		4.500"	3.625"	3.000"	4.000"	3.000"	2.625"	.420"	7.500"	4.562"	6.000"	7.500"	550.00 lb	4.585 lb
2708		4.500"	3.625"	3.000"	4.000"	3.000"	2.625"	.420"	6.500"	3.875"	5.000"	6.500"	700.00 lb	4.419 lb
2712		4.500"	3.625"	3.000"	4.000"	3.000"	2.625"	.420"	7.500"	4.562"	6.000"	7.500"	900.00 lb	4.766 lb
40-2700	M	114.30mm	92.08mm	76.20mm	101.60mm	76.20mm	66.68mm	10.67mm	165.10mm	98.43mm	127.00mm	165.10mm	117.45 kg	2.0126 kg
40-2704		114.30mm	92.08mm	76.20mm	101.60mm	76.20mm	66.68mm	10.67mm	190.50mm	115.88mm	152.40mm	190.50mm	250.00 kg	2.0561 kg
40-2708		114.30mm	92.08mm	76.20mm	101.60mm	76.20mm	66.68mm	10.67mm	165.10mm	98.43mm	127.00mm	165.10mm	318.18 kg	2.0300 kg
40-2712		114.30mm	92.08mm	76.20mm	101.60mm	76.20mm	66.68mm	10.67mm	190.50mm	115.88mm	152.40mm	190.50mm	409.09 kg	2.2244 kg

Material Specifications

Part No.	Material	Finish	Color
2700	Steel / Soft Rubber	Zinc	Gray
2704			
2708	Steel / Hard Rubber		Red on Black
2712			
40-2700	Steel / Soft Rubber		Gray
40-2704			
40-2708	Steel / Hard Rubber		Red on Black
40-2712			

Suggested Hardware (Mount to Base Plate)

Part No.	Series	Qty.	Bolt
3125	F	4	3/8-16 x 3/4" SHCS
13-1520	M	4	M10 x 20mm SHCS

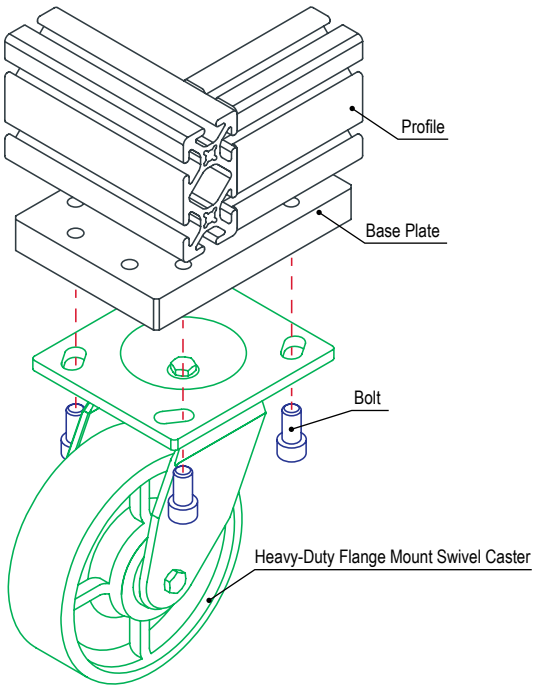

80/20 BUILD YOUR IDEA
More on 80/20® products available at 8020.net

Heavy-Duty Flange Mount Rigid Caster

- Mounts to profile side using base plate (pg. 5-37)
- Quick access to lubrication fittings; oil resistant option with higher ground clearance

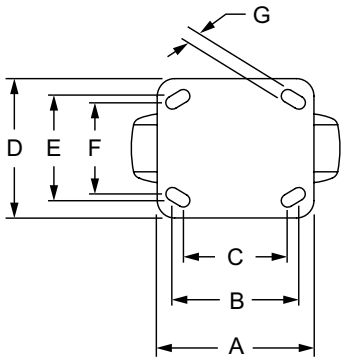

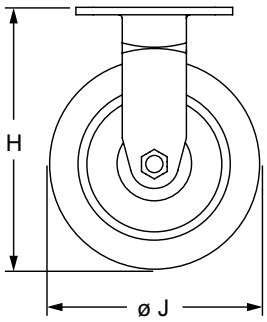

Part No.	Series	A	B	C	D	E	F	G	H	J	Load Height	Load Capacity	Weight
2701	F	4.437"	3.625"	3.000"	4.000"	3.000"	2.625"	.420"	6.500"	5.000"	6.500"	500.00 lb	3.455 lb
2705		4.437"	3.625"	3.000"	4.000"	3.000"	2.625"	.420"	7.500"	6.000"	7.500"	500.00 lb	3.716 lb
2709		4.437"	3.625"	3.000"	4.000"	3.000"	2.625"	.420"	6.500"	5.000"	6.500"	800.00 lb	3.647 lb
2713		4.437"	3.625"	3.000"	4.000"	3.000"	2.625"	.420"	7.500"	6.000"	7.500"	900.00 lb	3.935 lb
40-2701	M	112.70mm	92.08mm	76.20mm	101.60mm	76.20mm	66.68mm	10.67mm	165.10mm	127.00mm	165.10mm	227.27 kg	1.5549 kg
40-2705		112.70mm	92.08mm	76.20mm	101.60mm	76.20mm	66.68mm	10.67mm	190.50mm	152.40mm	190.50mm	227.27 kg	1.6883 kg
40-2709		112.70mm	92.08mm	76.20mm	101.60mm	76.20mm	66.68mm	10.67mm	165.10mm	127.00mm	165.10mm	363.64 kg	1.6433 kg
40-2713		112.70mm	92.08mm	76.20mm	101.60mm	76.20mm	66.68mm	10.67mm	190.50mm	152.40mm	190.50mm	409.09 kg	1.8516 kg

Material Specifications

Part No.	Material	Finish	Color
2701	Steel / Soft Rubber	Zinc	Gray
2705			
2709	Steel / Hard Rubber		Red on Black
2713			
40-2701	Steel / Soft Rubber		Gray
40-2705			
40-2709	Steel / Hard Rubber		Red on Black
40-2713			

Suggested Hardware (Mount to Base Plate)

Part No.	Series	Qty.	Bolt
3125	F	4	3/8-16 x 3/4" SHCS
13-1520	M	4	M10 x 20mm SHCS

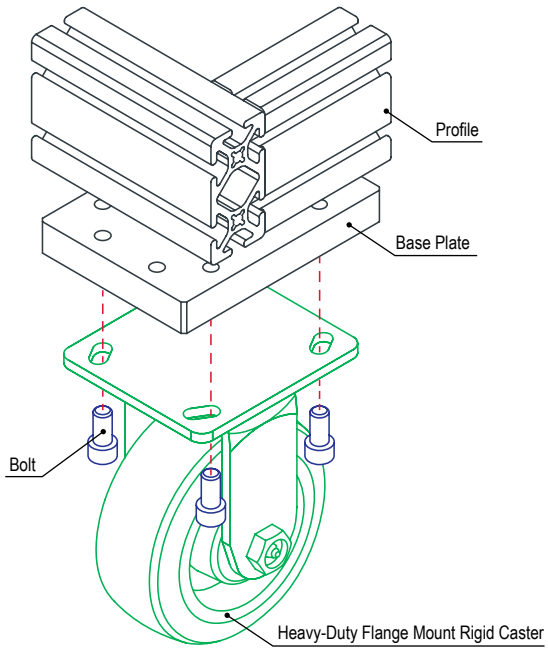

Casters & Feet

High-Capacity Swivel Caster

- Mounts to profile side using base plate (pg. 5-37)
- Made for higher loads and smooth rolling movement; polyurethane wheel is resistant to machining chips on floor

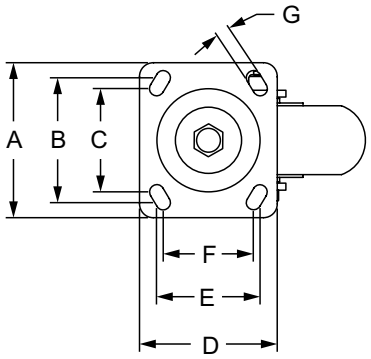

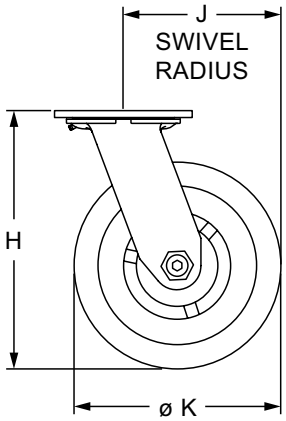

Part No.	Series	Material	A	B	C	D	E	F	G	H	J	K	Load Capacity	Weight
2703	15 40	Steel / Polyurethane	4.500"	3.625"	3.000"	4.000"	3.000"	2.625"	.420"	7.500"	4.562"	6.000"	1000 lb	5.727 lb

Suggested Hardware (Mount to Base Plate)

Part No.	Series	Qty.	Bolt
3125	15	4	3/8-16 x 3/4" SHCS
13-1520	40	4	M10 x 20mm SHCS

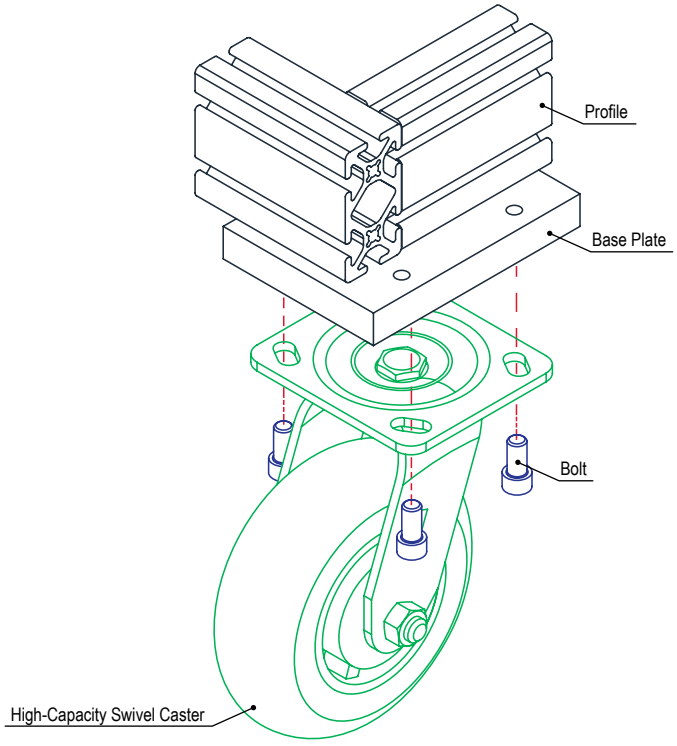

80/20 BUILD YOUR IDEA
More on 80/20® products available at 8020.net

High-Capacity Rigid Caster

- Mounts to profile side using base plate (pg. 5-37)
- Made for higher loads and smooth rolling movement; polyurethane wheel is resistant to machining chips on floor

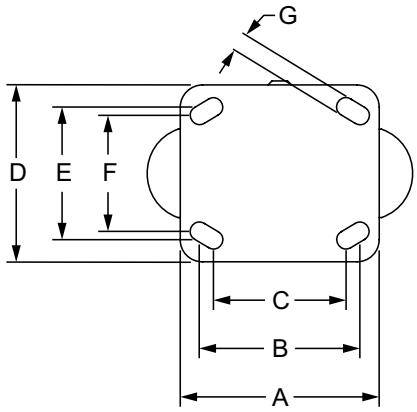

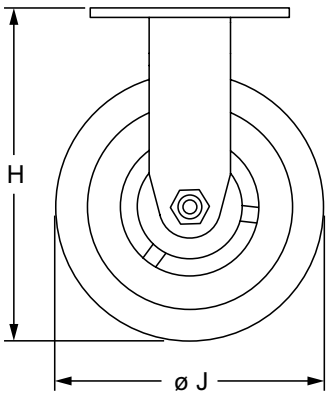

Part No.	Series	Material	A	B	C	D	E	F	G	H	J	Load Capacity	Weight
2702	15 40	Steel / Polyurethane	4.500"	3.625"	3.000"	4.000"	3.000"	2.625"	.420"	7.500"	6.000"	1000 lb	5.009 lb

Suggested Hardware (Mount to Base Plate)

Part No.	Series	Qty.	Bolt
3125	15	4	3/8-16 x 3/4" SHCS
13-1520	40	4	M10 x 20mm SHCS

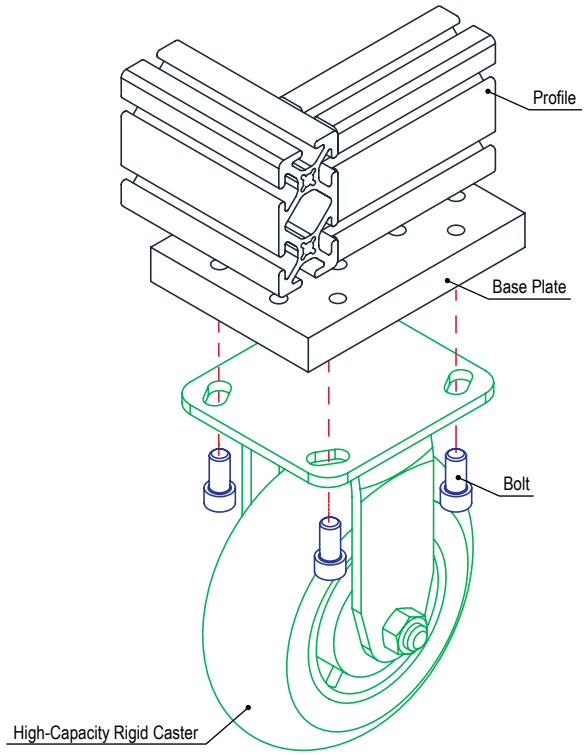

Casters & Feet

Leveling Caster

- Mounts directly to T-slot profile end or to profile side using base plate (pg. 5-38)
- Incorporates leveling and mobility features in one component; ideal for large machines and automation

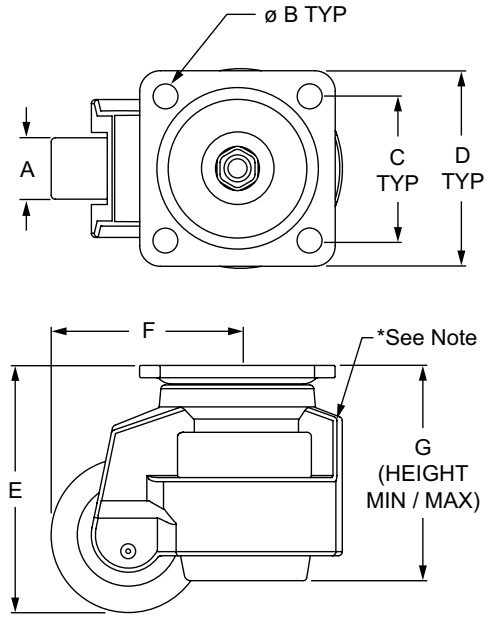

Part No.	Series	A	B	C	D	E	F	G	Load Capacity	Weight
2714	F	.945"	.276"	2.283"	2.874"	3.228"	2.362"	2.700" / 3.650"	550.00 lb	1.620 lb
2715		1.142"	.315"	2.756"	3.543"	4.020"	3.051"	3.429" / 4.606"	1100.00 lb	2.943 lb
2716		1.193"	.433"	2.756"	3.740"	4.724"	3.563"	4.035" / 5.197"	1650.00 lb	3.950 lb
2717*		1.220"	.433"	2.756"	3.740"	4.724"	3.563"	4.250" / 4.875"	2205.00 lb	3.557 lb
65-2714	M	24.00mm	7.00mm	58.00mm	73.00mm	82.00mm	60.00mm	68.70mm / 92.70mm	249.47 kg	.7542 kg
40-2715		29.00mm	9.00mm	70.00mm	90.00mm	102.00mm	77.50mm	87.10mm / 117.00mm	498.95 kg	1.3045 kg
40-2716		30.30mm	11.00mm	70.00mm	95.00mm	120.00mm	90.50mm	102.50mm / 132.00mm	748.42 kg	1.7917 kg
40-2717*		31.00mm	11.00mm	70.00mm	95.00mm	119.90mm	90.50mm	107.95mm / 123.83mm	1000.00 kg	1.6134 kg

*Center bar not available

Material Specifications

Material	Finish	Color
Die Cast Aluminum / Plastic Nylon (Nylon 6)	Powder Coat Over Zinc	Black

Suggested Hardware (Mount to Base Plate)

Caster No.	Series	Base Plate	Bolt Kit	Bolt Kit Qty.
2714	F	2406 / 2407	3064	4
2715		2408	3112	4
2716		2409	3125	4
2717		2409	3125	4
65-2714	M	25-2406 / 40-2407	13-6520	4
40-2715		40-2408	13-8525	4
40-2716		40-2409	13-1520	4
40-2717		40-2409	13-1520	4

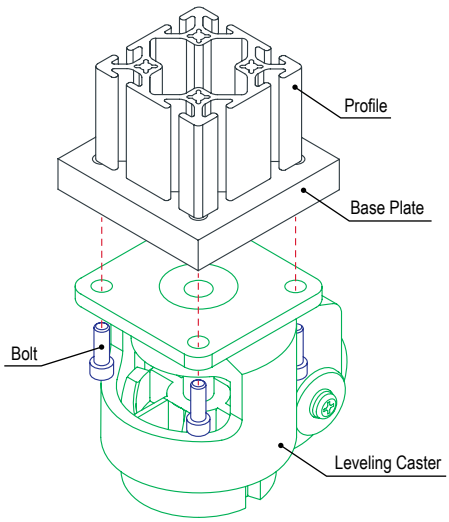

80/20 BUILD YOUR IDEA
More on 80/20® products available at 8020.net

Adjustable Position Floor Lock

- Mounts to T-slot profile side using position floor lock base plate (pg. 5-39)
- Extends up to 2.75” (69.85mm); minimum weight required is 70 pounds (31.75 kg)
- Adjust holding force with tension nut from 70 pounds (31.75 kg) to 120 pounds (54.43 kg)

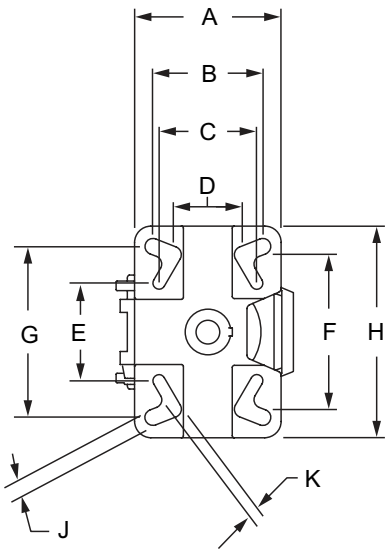

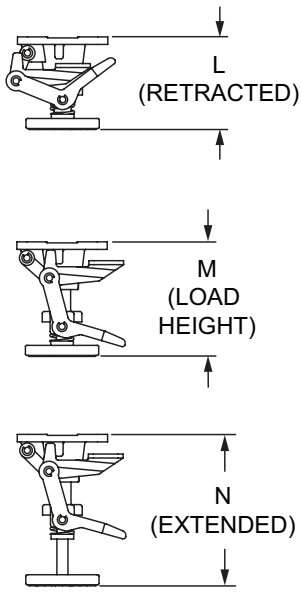

Part No.	Series	A	B	C	D	E	F	G	H	J	K	L	M	N	Load Capacity	Weight
2731	F	4.500”	3.319”	2.992”	2.157”	2.933”	4.870”	5.228”	6.500”	.492”	.374”	5.500”	6.250”	8.000”	70-120 lb	7.115 lb
40-2731	M	114.30mm	84.30mm	76.00mm	54.80mm	74.50mm	123.70mm	132.80mm	165.10mm	12.50mm	9.50mm	139.70mm	158.75mm	203.20mm	32-54 kg	3.233 kg

Material Specifications

Material	Finish
Steel Casting	Paint

Suggested Hardware (Mount to Base Plate)

Part No.	Series	Qty.	Bolt
3289	F	4	3/8-16 x 1.00” SHCS & Washer
13-1525	M	4	M10 x 25.00mm SHCS
13-6043	M	4	10.63mm ID Washer

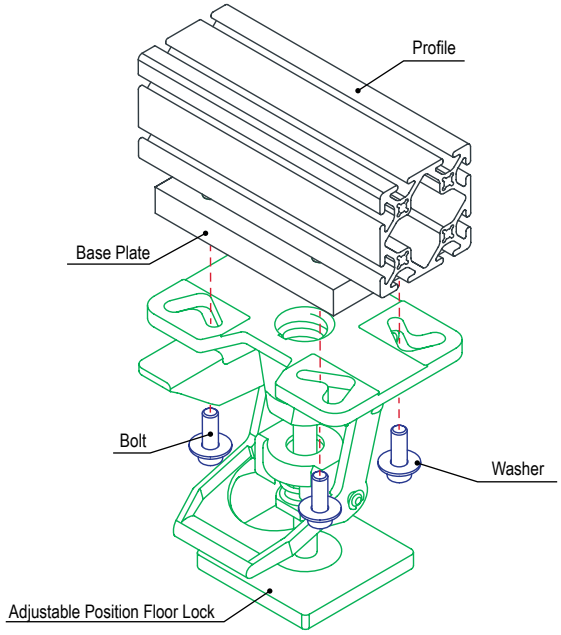

Casters & Feet

Standard Floor Glide

- Mounts directly to T-slot profile end or to profile side using base plate (pg. 5-40)
- Works well on carpet or tiled areas

2203

2204

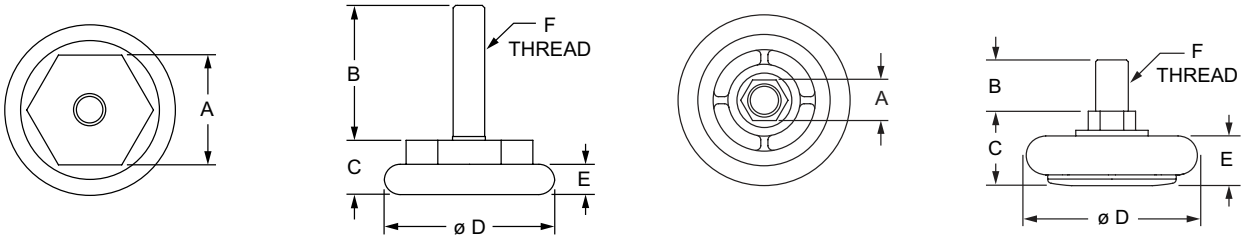

Part No.	Series	Material	Finish	Color	A	B	C	D	E	F	Load Capacity	Weight
2203	F	Steel / Nylon	Zinc	Black	.875"	1.070"	.430"	1.350"	.240"	1/4-20	100.00 lb	.033 lb
2204					.470"	.593"	.860"	1.968"	.575"	3/8-16	100.00 lb	.088 lb

Required Machining Services

Machining Type	Machined	Reference Page
Tap Profile End	Mounting Profile	10-3

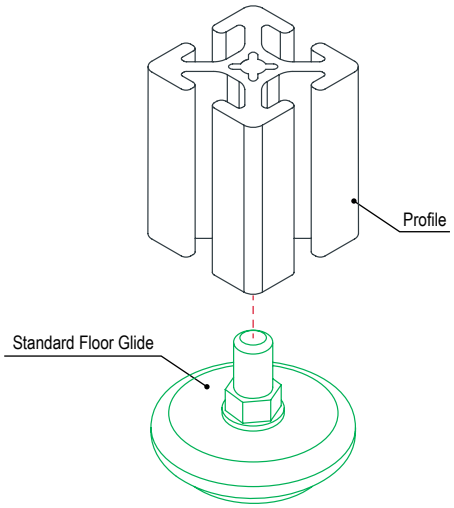

80/20 BUILD YOUR IDEA
More on 80/20® products available at 8020.net

Economy Floor Glide

- Mounts directly to T-slot profile end or to profile side using base plate (pg. 5-40)
- Works well on variety of surfaces such as concrete, carpet or tiled areas

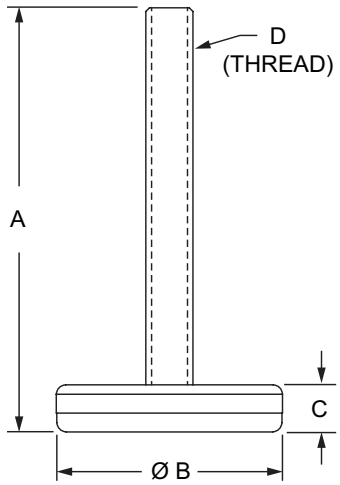

Part No.	Series	Material	Process	Finish	Color	A	B	C	D	Load Capacity	Weight
2186	F	Steel / Nylon	Machined	Nickel	Bright / Natural	2.250"	1.200"	.378"	1/4-20	250.00 lb	.042 lb
2187	F RT					2.840"	2.030"	.460"	5/16-18	250.00 lb	.118 lb
2188	F RT					3.030"	2.400"	.530"	3/8-16	250.00 lb	.169 lb
2189	F RT					3.030"	2.800"	.542"	1/2-13	500.00 lb	.258 lb
25-2186	M					57.20mm	31.00mm	9.60mm	M6 x 1.0	113.00 kg	.0188 kg
65-2187	M RT					57.20mm	52.00mm	11.80mm	M8 x 1.25	113.00 kg	.0501 kg
65-2188	M RT					75.40mm	61.00mm	13.40mm	M10 x 1.5	113.00 kg	.0806 kg
65-2189	M RT					77.00mm	72.00mm	13.76mm	M12 x 1.75	227.00 kg	.1142 kg

Required Machining Services

Machining Type	Machined	Reference Page
Tap Profile End	Mounting Profile	10-3

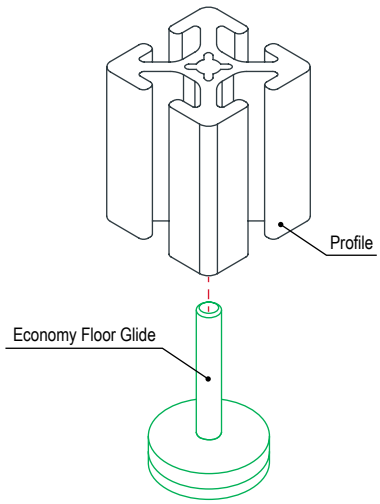

Casters & Feet

Large Base Glide

- Mounts using base plate (pg. 5-40); works for leveling heavier applications
- 15 degree swivel in all directions; punch out mounting holes for floor anchors (pg. 5-30) or bolting to floor

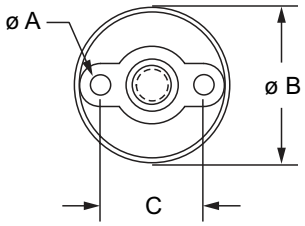

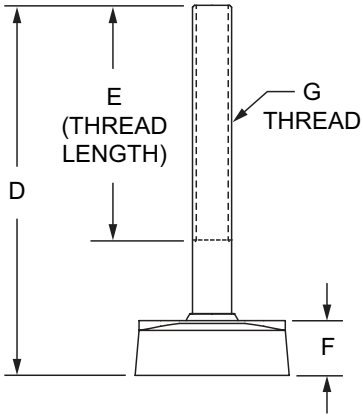

Part No.	Series	A	B	C	D	E	F	G	Load Capacity	Weight
2183	FRT	.272"	1.970"	1.320"	4.290"	3.000"	.730"	3/8-16	4000.00 lb	.236 lb
2184		.272"	1.970"	1.320"	4.290"	3.000"	.730"	1/2-13	4000.00 lb	.316 lb
2181		.354"	3.150"	2.165"	4.290"	3.000"	.730"	3/8-16	5000.00 lb	.304 lb
2182		.354"	3.150"	2.165"	4.290"	3.000"	.730"	1/2-13	5000.00 lb	.383 lb
65-2183	MRT	6.50mm	50.80mm	33.30mm	110.00mm	75.00mm	18.00mm	M10 x 1.50	1740.00 kg	.1128 kg
65-2184		6.50mm	50.80mm	33.30mm	110.00mm	75.00mm	18.00mm	M12 x 1.75	1740.00 kg	.1245 kg
65-2178		6.50mm	50.80mm	33.30mm	135.00mm	100.00mm	18.00mm	M16 x 2.00	1740.00 kg	.2227 kg
65-2181		9.00mm	80.00mm	55.00mm	110.00mm	75.00mm	18.00mm	M10 x 1.50	2175.00 kg	.1676 kg
65-2182		9.00mm	80.00mm	55.00mm	110.00mm	75.00mm	18.00mm	M12 x 1.75	2175.00 kg	.1626 kg
65-2179		9.00mm	80.00mm	55.00mm	135.00mm	100.00mm	18.00mm	M16 x 2.00	2175.00 kg	.2580 kg

Material Specifications

Material	Process	Finish	Color
Steel / Elastomer Rubber	Injection Molded	Zinc / Matte	Bright / Black

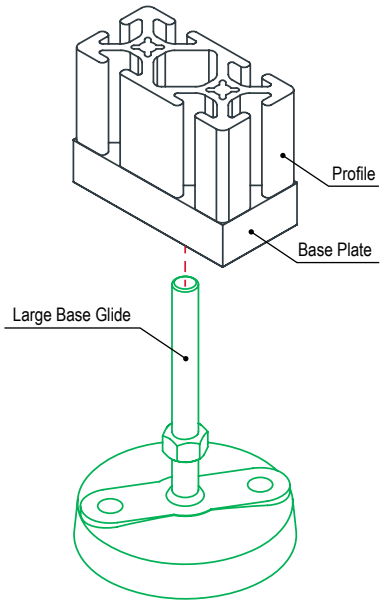

80/20 BUILD YOUR IDEA
More on 80/20® products available at 8020.net

Anti-Vibration Leveling Foot

- Recommended for use with leveling anchor base plate (pg. 5-45)
- High level of vibration and shock isolation; non-skid elastomer pad

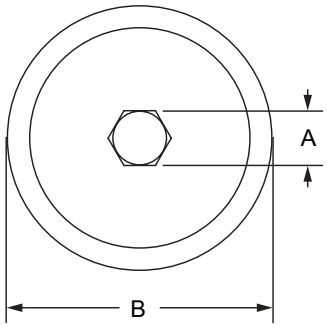

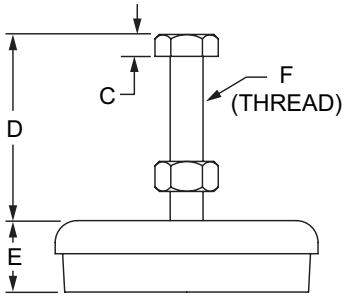

Part No.	Series	A	B	C	D	E	F	Load Capacity (MIN/MAX)	Weight
2215	F	.563"	3.000"	.250"	2.250"	1.500"	3/8-16	300.00 / 700.00 lb	1.005 lb
2205		.563"	3.000"	.250"	2.250"	1.500"	3/8-24	300.00 / 700.00 lb	1.008 lb
2216		.750"	5.000"	.375"	4.250"	1.500"	1/2-13	500.00 / 2,000.00 lb	2.404 lb
2217		1.125"	6.000"	.500"	4.250"	1.630"	3/4-10	1,000.00 / 4,500.00 lb	4.901 lb
25-2205	M	17.00mm	75.00mm	8.38mm	65.00mm	40.00mm	M10 x 1.50	136.08 / 317.52 kg	.4763 kg
40-2206		18.80mm	116.00mm	11.20mm	119.50mm	40.00mm	M12 x 1.75	226.80 / 907.18 kg	1.0659 kg

Material Specifications

Material	Process	Finish	Color
Steel / Elastomer Rubber	Cold Rolled Sheet Coil Steel Formed	Zinc / Powder Coated	Bright / Yellow / Black

Required Machining Services

Machining Type	Machined	Reference Page
Tap Profile End	Mounting Profile	10-3

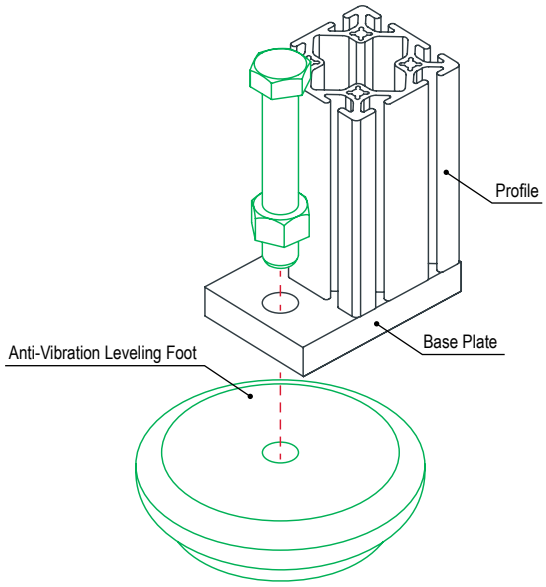

Casters & Feet

Economy Anti-Vibration Mount

- Mounts directly to T-slot profile end or to profile side using base plate (pg. 5-40)
- 20 degree swivel in all directions; includes jam nut

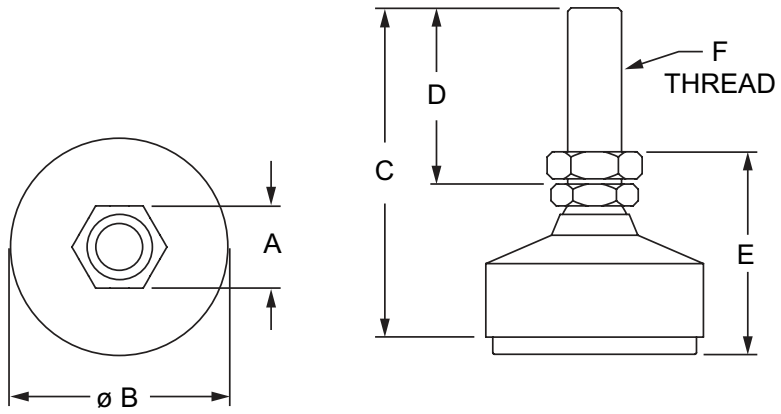

Part No.	Series	Material	Grade	Process	Finish	Color	A	B	C	D	E	F	Load Capacity	Weight
2207	F RT	Steel	12L14	Machined	Zinc	Yellow	.562"	1.250"	3.500"	2.000"	1.500"	3/8-16	200.00 lb	.346 lb
2208	F RT						.625"	1.875"	3.750"	2.000"	1.750"	1/2-13	500.00 lb	.816 lb
2209	F						1.062"	3.000"	4.125"	2.000"	2.125"	3/4-10	1250.00 lb	2.407 lb
65-2207	M RT						16.00mm	32.00mm	89.00mm	51.00mm	48.00mm	M10 x 1.50	23.00 kg	.1711 kg
65-2208	M RT						19.00mm	48.00mm	95.00mm	51.00mm	53.00mm	M12 x 1.75	54.00 kg	.3574 kg
65-2215	M						22.00mm	64.00mm	99.00mm	51.00mm	58.00mm	M16 x 2.00	100.00 kg	.6950 kg
65-2209	M						27.00mm	76.00mm	105.00mm	51.00mm	68.00mm	M20 x 2.50	148.00 kg	1.0991 kg

Required Machining Services

Machining Type	Machined	Reference Page
Tap Profile End	Mounting Profile	10-3

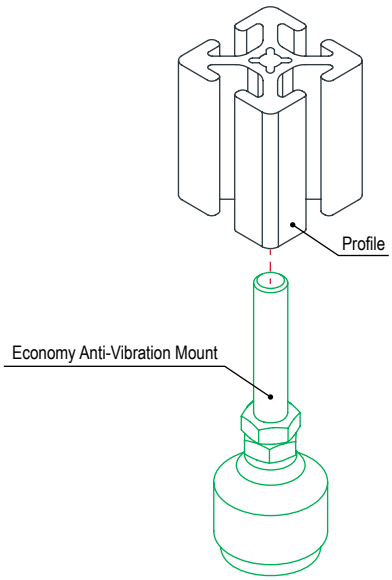

80/20 BUILD YOUR IDEA
More on 80/20® products available at 8020.net

Deluxe Leveling Foot

- Mounts directly to T-slot profile end or to profile side using base plate (pg. 5-40)
- 20 degree swivel in all directions; includes jam nut

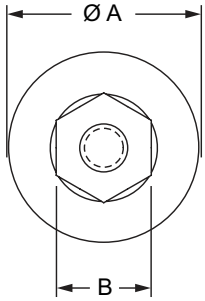

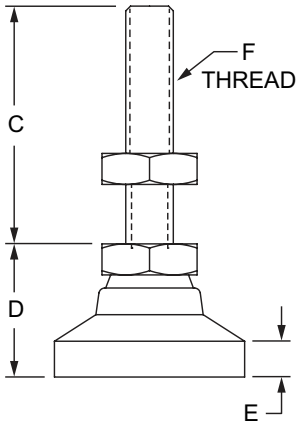

Part No.	Series	Material	Grade	Process	Finish	Color	A	B	C	D	E	F	Load Capacity	Weight
2192	F	Steel	12L14	Machined	Zinc	Yellow	1.000"	.500"	1.250"	.703"	.156"	1/4-20	1000.00 lb	.1042 lb
2194	F RT						1.250"	.625"	2.000"	.875"	.188"	5/16-18	2300.00 lb	.1966 lb
2190	F RT						1.250"	.625"	2.000"	.875"	.188"	3/8-16	3750.00 lb	.2160 lb
2200	F RT						1.875"	.750"	2.000"	1.125"	.250"	1/2-13	5000.00 lb	.4940 lb
2202	F						3.000"	1.062"	2.000"	1.500"	.500"	3/4-10	7400.00 lb	1.6930 lb
25-2192	M						19.00mm	10.00mm	25.00mm	14.00mm	2.50mm	M6 x 1.00	317.00 kg	.0213 kg
65-2212	M RT						26.00mm	13.00mm	32.00mm	18.00mm	3.50mm	M8 x 1.25	453.00 kg	.0487 kg
65-2190	M RT						32.00mm	16.00mm	51.00mm	22.00mm	4.00mm	M10 x 1.50	1701.00 kg	.1049 kg
65-2200	M RT						48.00mm	19.00mm	51.00mm	29.00mm	5.50mm	M12 x 1.75	2268.00 kg	.2183 kg
65-2213	M						64.00mm	22.00mm	51.00mm	32.00mm	8.00mm	M16 x 2.00	2721.00 kg	.4490 kg
65-2202	M						76.00mm	27.00mm	51.00mm	38.00mm	10.00mm	M20 x 2.50	3357.00 kg	.7580 kg

Required Machining Services

Machining Type	Machined	Reference Page
Tap Profile End	Mounting Profile	10-3

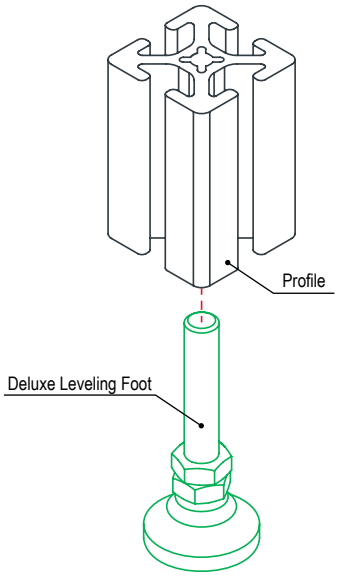

Casters & Feet

Economy Leveling Foot

- Mounts directly to T-slot profile end or to profile side using base plate (pg. 5-40)
- Includes jam nut

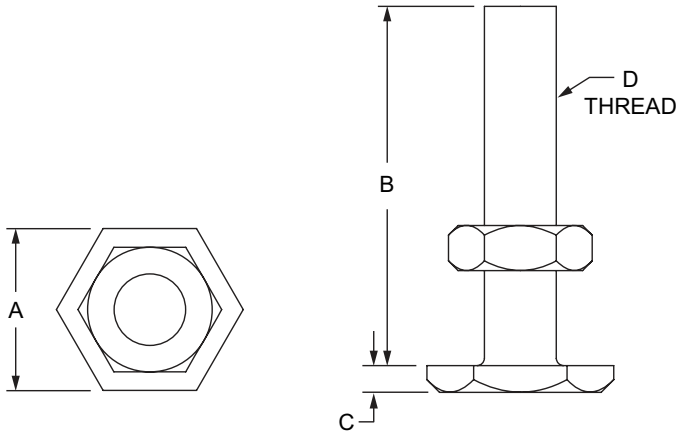

Part No.	Series	Material	Grade	Process	Finish	Color	A	B	C	D	Load Capacity	Weight
2193	F	Steel	C1010	Cold Formed	Zinc	Black	.563"	1.250"	.094"	1/4-20	1050.00 lb	.025 lb
2195	F RT						.750"	1.500"	.109"	5/16-18	1750.00 lb	.046 lb
2191	F RT						.875"	2.000"	.141"	3/8-16	2550.00 lb	.082 lb
2201	F RT						1.063"	2.500"	.172"	1/2-13	4700.00 lb	.180 lb
25-2193	M					Bright	14.00mm	30.00mm	2.40mm	M6 x 1.00	475.00 kg	.0089 kg
65-2195	M RT						18.00mm	40.00mm	3.10mm	M8 x 1.25	790.00 kg	.0213 kg
65-2191	M RT						22.00mm	60.00mm	3.70mm	M10 x 1.50	1150.00 kg	.0471 kg
65-2201	M RT						25.00mm	63.00mm	4.40mm	M12 x 1.75	2130.00 kg	.0721kg

Required Machining Services

Machining Type	Machined	Reference Page
Tap Profile End	Mounting Profile	10-3

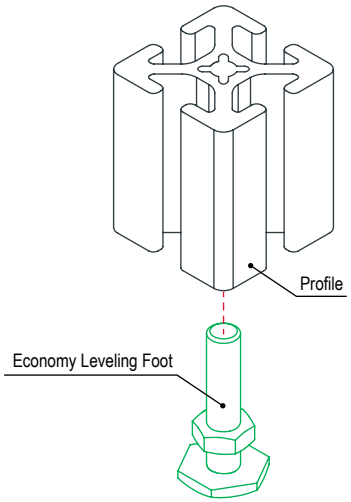

80/20 BUILD YOUR IDEA
More on 80/20® products available at 8020.net

Swivel Foot Base

- Heavy-duty with rubber pad provides resistance to vibration
- Requires threaded stem (pg. 5-26)

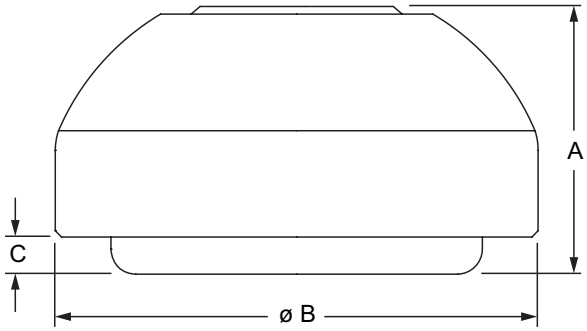

Part No.	Series	Material	Process	Finish	Color	A	B	C	Load Capacity	Weight
12170	F M	Stainless-Steel / Thermoplastic Elastomer	Metal Injection Molded	Stainless	Satin / Black	20.00mm	29.00mm	2.00mm	4,400 lb / 1995.80 kg	.0670 kg
12172						20.00mm	39.00mm	2.00mm	6,600 lb / 2993.71 kg	.1092 kg
12174						20.00mm	44.00mm	2.00mm	6,600 lb / 2993.71 kg	.1300 kg
12176						20.00mm	49.00mm	2.00mm	7,700 lb / 3492.66 kg	.1680 kg
12178						20.00mm	59.00mm	2.00mm	7,700 lb / 3492.66 kg	.2324 kg
12182						20.00mm	79.00mm	2.00mm	8,000 lb / 3991.61 kg	.4065 kg
12186						20.00mm	99.00mm	2.00mm	8,000 lb / 3991.61 kg	.6451 kg

Swivel Foot Base with Mount Holes

- Heavy-duty with mounting holes and resistance to vibration
- Requires threaded stem (pg. 5-26)

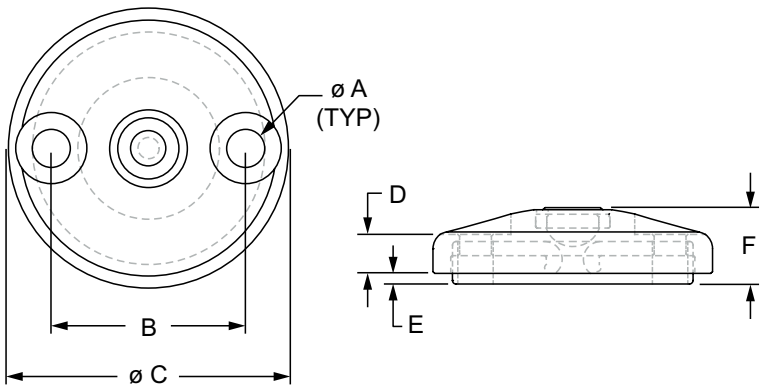

Part No.	Series	A	B	C	D	E	F	Load Capacity	Weight
12181	F M	9.00mm	55.00mm	79.00mm	11.00mm	2.00mm	20.00mm	2993.71 kg	.3865 kg
12185		9.00mm	74.00mm	99.00mm	11.00mm	2.00mm	20.00mm	3991.61 kg	.6238 kg

Material Specifications

Material	Process	Finish	Color
Stainless-Steel / Thermoplastic Elastomer	Metal Injection Molded	Stainless	Satin / Black

Casters & Feet

Swivel Foot Threaded Stem

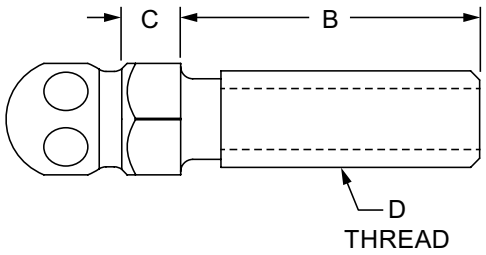

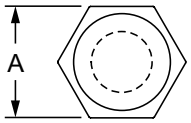

Part No.	Series	Material	Grade	Process	Finish	Color	A	B	C	D	Load Capacity	Weight
12211	F	Steel	5.8		Zinc	Bright	.551"	—	.295"	1/4-20	400.00 lb	.047 lb
12229	F	Stainless-Steel	304		Stainless	Natural	9/16	1.500"	.295"	1/4-20	400.00 lb	.069 lb
12230	F	Steel	5.8		Zinc	Bright	9/16	1.500"	.295"	1/4-20	400.00 lb	.070 lb
12245	F	Stainless-Steel	304		Stainless	Natural	9/16	1.500"	.295"	5/16-18	700.00 lb	.081 lb
12246	F	Steel	5.8		Zinc	Bright	9/16	1.500"	.295"	5/16-18	700.00 lb	.078 lb
12247	F	Stainless-Steel	304		Stainless	Natural	9/16	2.500"	.295"	5/16-18	700.00 lb	.094 lb
12248	F	Steel	5.8		Zinc	Bright	9/16	2.500"	.295"	5/16-18	700.00 lb	.093 lb
12249	F	Stainless-Steel	304		Stainless	Natural	9/16	3.500"	.295"	5/16-18	700.00 lb	.111 lb
12250	F	Steel	5.8		Zinc	Bright	9/16	3.500"	.295"	5/16-18	700.00 lb	.120 lb
12237	F	Stainless-Steel	304		Stainless	Natural	9/16	1.500"	.295"	3/8-16	1000.00 lb	.092 lb
12238	F	Steel	5.8		Zinc	Bright	9/16	1.500"	.295"	3/8-16	1000.00 lb	.090 lb
12239	F	Stainless-Steel	304		Stainless	Natural	9/16	2.500"	.295"	3/8-16	1000.00 lb	.113 lb
12240	F	Steel	5.8		Zinc	Bright	9/16	2.500"	.295"	3/8-16	1000.00 lb	.112 lb
12241	F	Stainless-Steel	304		Stainless	Natural	9/16	4.000"	.295"	3/8-16	1000.00 lb	.154 lb
12242	F	Steel	5.8		Zinc	Bright	9/16	4.000"	.295"	3/8-16	1000.00 lb	.147 lb
12243	F	Stainless-Steel	304		Stainless	Natural	9/16	6.000"	.295"	3/8-16	1000.00 lb	.200 lb
12213	F	Stainless-Steel	304		Stainless	Natural	9/16	1.500"	.295"	1/2-13	1600.00 lb	.112 lb
12215	F	Stainless-Steel	304		Stainless	Natural	9/16	2.500"	.295"	1/2-13	1600.00 lb	.162 lb
12216	F	Steel	5.8		Zinc	Bright	9/16	2.500"	.295"	1/2-13	1600.00 lb	.162 lb
12217	F	Stainless-Steel	304		Stainless	Natural	9/16	2.000"	.295"	1/2-13	1600.00 lb	.140 lb
12218	F	Steel	5.8		Zinc	Bright	9/16	2.000"	.295"	1/2-13	1600.00 lb	.143 lb
12221	F	Stainless-Steel	304		Stainless	Natural	9/16	3.000"	.295"	1/2-13	1600.00 lb	.188 lb
12222	F	Steel	5.8	Machined	Zinc	Bright	9/16	3.000"	.295"	1/2-13	1600.00 lb	.179 lb
12223	F	Stainless-Steel	304		Stainless	Natural	9/16	4.000"	.295"	1/2-13	1600.00 lb	.234 lb
12224	F	Steel	5.8		Zinc	Bright	9/16	4.000"	.295"	1/2-13	1600.00 lb	.229 lb
12227	F	Stainless-Steel	304		Stainless	Natural	9/16	6.000"	.295"	1/2-13	1600.00 lb	.312 lb
12228	F	Steel	5.8		Zinc	Bright	9/16	6.000"	.295"	1/2-13	1600.00 lb	.322 lb
12231	F	Stainless-Steel	304		Stainless	Natural	7/8	4.000"	.413"	3/4-10	5300.00 lb	.518 lb
12232	F	Steel	5.8		Zinc	Bright	7/8	4.000"	.413"	3/4-10	5300.00 lb	.508 lb
12233	F	Stainless-Steel	304		Stainless	Natural	7/8	6.000"	.413"	3/4-10	5300.00 lb	.731 lb
12234	F	Steel	5.8		Zinc	Bright	7/8	6.000"	.413"	3/4-10	5300.00 lb	.723 lb
12195	M	Stainless-Steel	304		Stainless	Natural	14.00mm	40.00mm	7.50mm	M8 x 1.25	318.00 kg	.0363 kg
12390	M	Steel	5.8		Zinc	Bright	14.00mm	40.00mm	7.50mm	M8 x 1.25	318.00 kg	.0358 kg
12392	M	Steel	5.8		Zinc	Bright	14.00mm	80.00mm	7.50mm	M8 x 1.25	318.00 kg	.0484 kg
12197	M	Stainless-Steel	304		Stainless	Natural	14.00mm	45.00mm	7.50mm	M10 x 1.50	454.00 kg	.0459 kg
12394	M	Steel	5.8		Zinc	Bright	14.00mm	45.00mm	7.50mm	M10 x 1.50	454.00 kg	.0456 kg
12198	M	Stainless-Steel	304		Stainless	Natural	14.00mm	90.00mm	7.50mm	M10 x 1.50	454.00 kg	.0671 kg
12396	M	Steel	5.8		Zinc	Bright	14.00mm	90.00mm	7.50mm	M10 x 1.50	454.00 kg	.0680 kg
12200	M	Stainless-Steel	304		Stainless	Natural	14.00mm	45.00mm	7.50mm	M12 x 1.75	726.00 kg	.0563 kg
12400	M	Steel	5.8		Zinc	Bright	14.00mm	45.00mm	7.50mm	M12 x 1.75	726.00 kg	.0555 kg
12201	M	Stainless-Steel	304		Stainless	Natural	14.00mm	100.00mm	7.50mm	M12 x 1.75	726.00 kg	.0963 kg
12402	M	Steel	5.8		Zinc	Bright	14.00mm	100.00mm	7.50mm	M12 x 1.75	726.00 kg	.0953 kg
12203	M	Stainless-Steel	304		Stainless	Natural	17.00mm	66.00mm	7.50mm	M16 x 2.00	1406.00 kg	.1133 kg
12204	M	Stainless-Steel	304		Stainless	Natural	17.00mm	125.00mm	7.50mm	M16 x 2.00	1406.00 kg	.1919 kg
12408	M	Steel	5.8		Zinc	Bright	17.00mm	125.00mm	7.50mm	M16 x 2.00	1406.00 kg	.1883 kg

80/20 BUILD YOUR IDEA
More on 80/20® products available at 8020.net

Swivel Foot Extended Base

- Through-hole secures directly to concrete floor with a wedge anchor (pg. 5-30)
- Requires threaded stem (pg. 5-26)

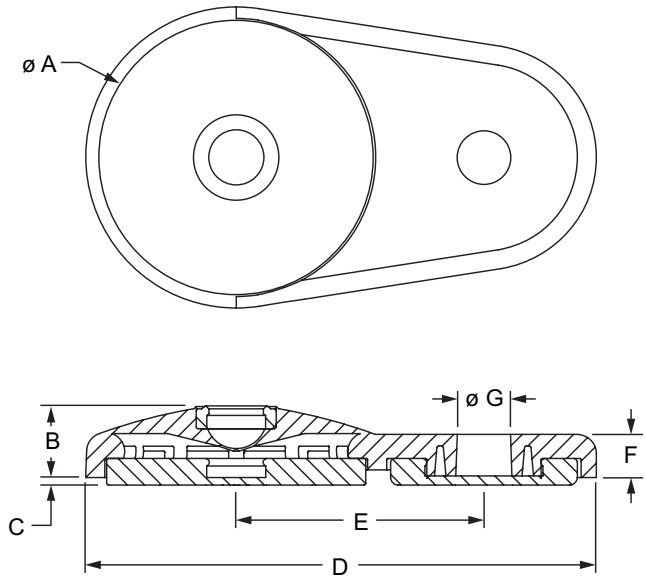

Part No.	Series	Material	Process	Finish	Color	A	B	C	D	E	F	G	Load Capacity	Weight
12192	F M	Die Cast Zinc	Die-Casting	Black Powder Coated	Black	3.110"	.709"	.079"	5.275"	2.559"	.445"	.551"	6600.00 lb	.969 lb

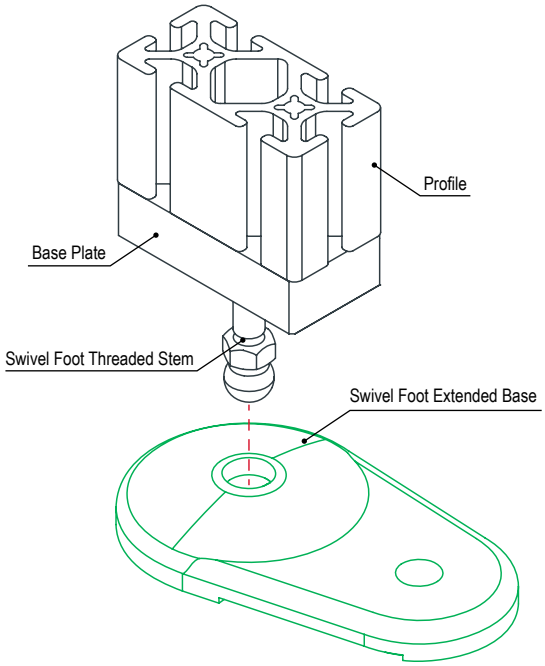

Casters & Feet

Swivel Foot Trapezoid Base

- Heavy-duty with rubber pad provides resistance to vibration
- Requires threaded stem (pg. 5-26)

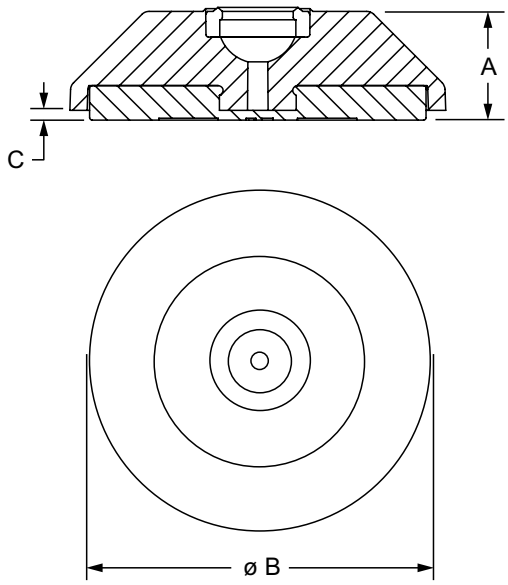

Part No.	Series	Material	Process	Finish	A	B	C	Load Capacity	Weight
12194	F M	Die Cast Zinc	Die-Casting	Black Powder Coated	.866"	2.992"	.079"	6600.00 lb	.480 lb

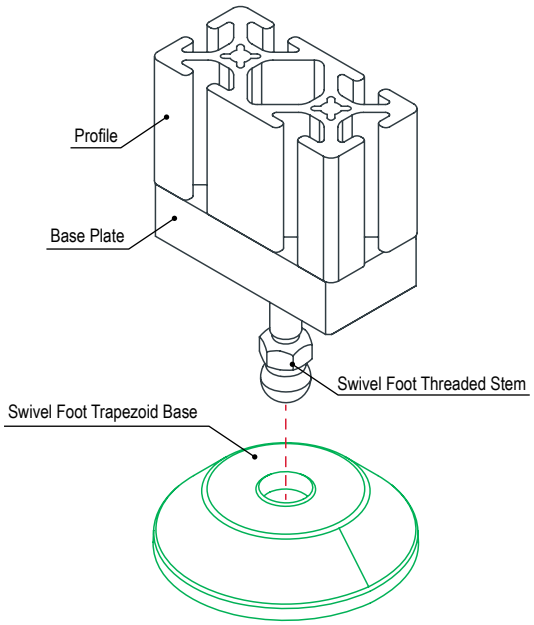

80/20 BUILD YOUR IDEA
More on 80/20® products available at 8020.net

Trapezoid Base Anchor

- Used with swivel foot trapezoid base (pg. 5-28) securely holds in place when used with wedge floor anchor (pg. 5-30)
- Enables repositioning without having to detach anchor

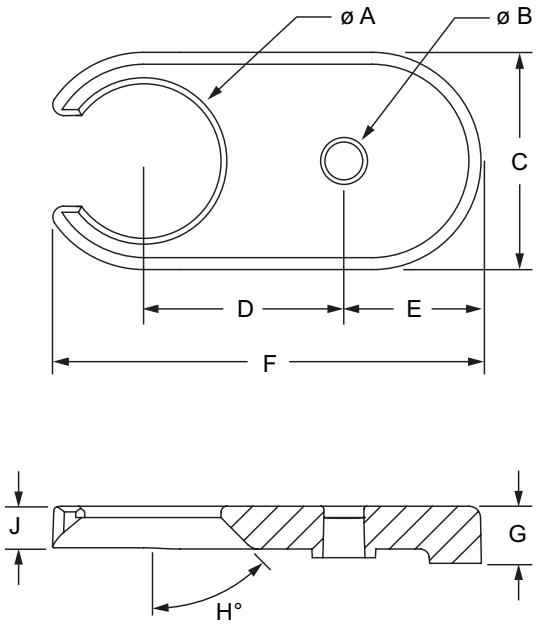

Part No.	Series	Material	Process	Finish	A	B	C	D	E	F	G	H	J	Weight
12168	F M	Die Cast Zinc	Die-Casting	Black Powder Coated	2.126"	.551"	2.992"	2.756"	1.890"	5.905"	.787"	45°	.590"	1.080 lb

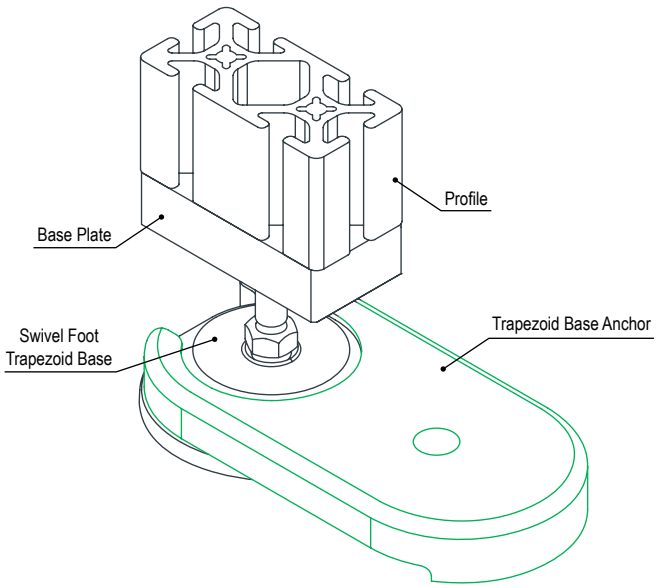

Casters & Feet

Wedge Floor Anchor

- Used to mount fixtures directly to solid concrete surface
- Includes washer and hex nut

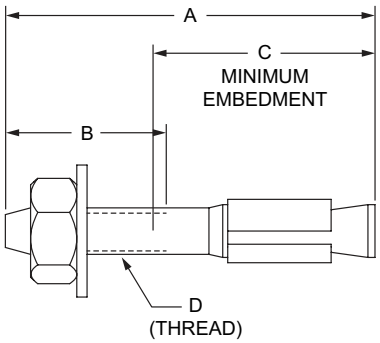

Part No.	Series	Material	Finish	A	B	C	D	Tension	Shear	Weight
2904		Steel	Zinc	1.750"	.750"	1.125"	1/4-20	1771.00 lb	1813.00 lb	.033 lb
2905				3.250"	2.250"	1.125"	1/4-20	2748.00 lb	2813.00 lb	.049 lb
2901	F			2.750"	1.315"	1.500"	3/8-16	3219.00 lb	4029.00 lb	.095 lb
2902				3.750"	2.315"	1.500"	3/8-16	5678.00 lb	4305.00 lb	.121 lb
2903				5.000"	3.565"	1.500"	3/8-16	5935.00 lb	4581.00 lb	.153 lb
2906				3.750"	1.837"	2.250"	1/2-13	5384.00 lb	6900.00 lb	.229 lb
2907	F RT			5.500"	3.587"	2.250"	1/2-13	7333.00 lb	7449.00 lb	.307 lb
2908				7.000"	5.087"	2.250"	1/2-13	9003.00 lb	7998.00 lb	.371 lb
65-2904				44.45mm	19.05mm	28.57mm	1/4-20	803.30 kg	822.35 kg	.0150 kg
65-2905				82.55mm	57.15mm	28.57mm	1/4-20	1246.50 kg	1275.95 kg	.0223 kg
65-2901	M			69.85mm	33.40mm	38.10mm	3/8-16	1460.10 kg	1827.50 kg	.0425 kg
65-2902				95.25mm	58.80mm	38.10mm	3/8-16	2575.50 kg	1952.70 kg	.0535 kg
65-2903				127.00mm	90.55mm	38.10mm	3/8-16	2692.00 kg	2077.90 kg	.0714 kg
65-2906				95.25mm	46.67mm	57.16mm	1/2-13	2442.15 kg	3129.80 kg	.1030 kg
65-2907	M RT			139.70mm	91.10mm	57.16mm	1/2-13	3326.20 kg	3378.80 kg	.1405 kg
65-2908				177.80mm	129.22mm	57.16mm	1/2-13	4083.70 kg	3627.85 kg	.1696 kg

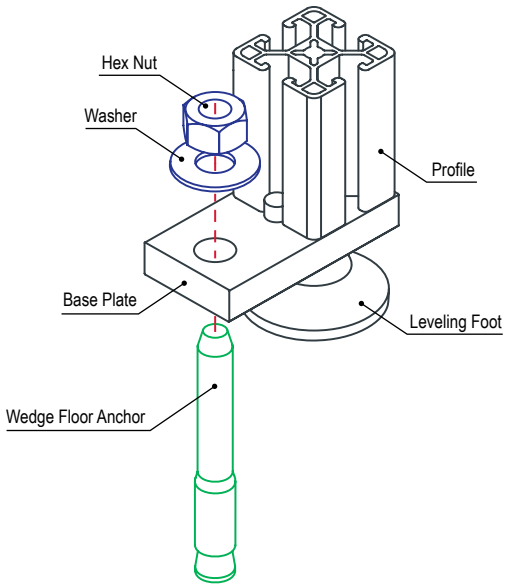

80/20 BUILD YOUR IDEA
More on 80/20® products available at 8020.net

Die-Cast Floor Bracket

- Used with wedge floor anchors (pg. 5-30)
- Mounts directly to T-slot profile

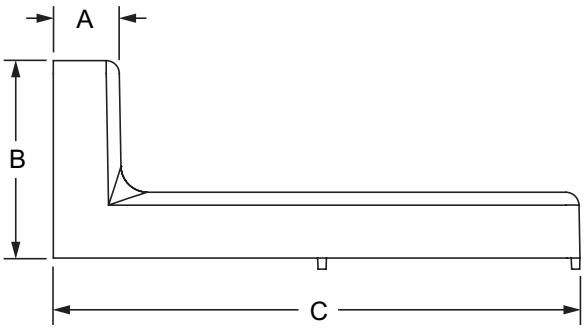

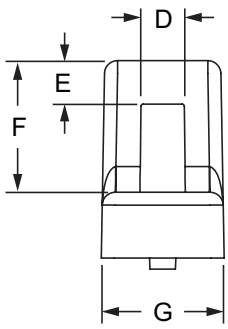

Part No.	Series	Material	Process	Finish	Color	A	B	C	D	E	F	G	Weight
14000	10 25	Die Cast Zinc	Die-Casting	Powder Coated	Black	15.20mm	45.30mm	120.80mm	10.10mm	10.10mm	30.20mm	28.20mm	.1927 kg
14002	15 30 40					15.20mm	45.30mm	120.80mm	10.10mm	10.10mm	30.20mm	28.20mm	.1932 kg
14006	15 40		Formed	Black		20.00mm	60.00mm	160.00mm	11.10mm	8.00mm	40.00mm	40.00mm	.2123 kg
14004	45		Die-Casting	Powder Coated		15.20mm	45.30mm	120.80mm	10.10mm	10.10mm	30.20mm	28.20mm	.1889 kg
14008	45					20.00mm	60.00mm	160.00mm	10.30mm	8.60mm	40.00mm	38.00mm	.4610 kg

Suggested Hardware (Mount to T-Slot)

Part No.	Bolt Assy.	Series	Qty.	Bolt	T-Nut
14000	3486	10	2	1/4-20 x 3/8 SHCS	Economy
14002	3493	15	2	1/4-20 x 5/8 SHCS	Economy
14006	3454	15	2	5/16-18 x 5/8 SHCS	Economy
14000	75-3520	25	2	M6 x 10mm SHCS	Economy
14002	75-3590	30	2	M6 x 10mm SHCS	Drop-In
14002	75-3593	40	2	M6 x 14mm SHCS	Drop-In
14006	75-3625	40	2	M8 x 16mm SHCS	Slide-In
14004	75-3594	45	2	M6 x 14mm SHCS	Drop-In
14008	75-3623	45	2	M8 x 16mm SHCS	Drop-In

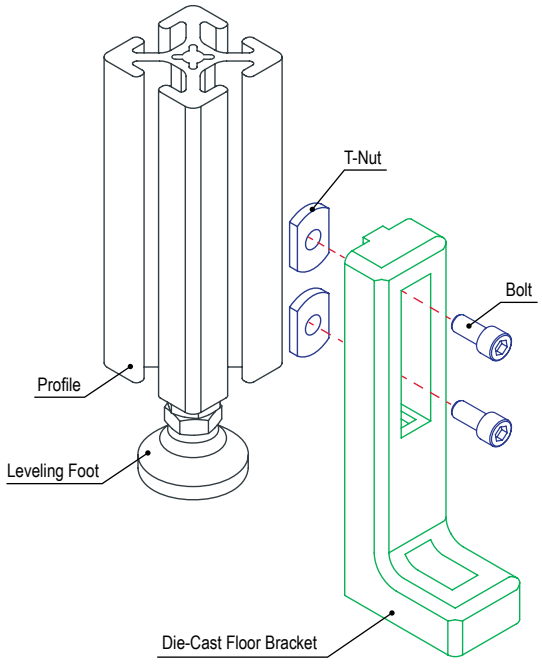

Casters & Feet

Adjustable Die-Cast Floor Bracket

- Used with wedge floor anchors (pg. 5-30); Mounts directly to T-slot profile
- Includes screw and stop plate that enables adjusting up and down without having to lift entire fixture

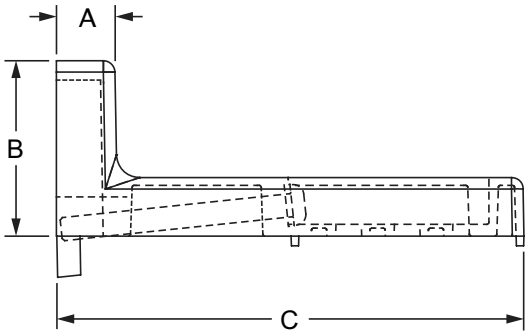

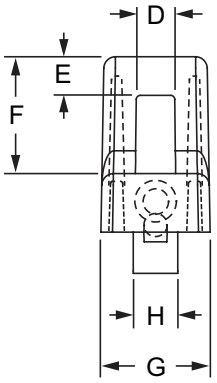

Part No.	Series	Material	Process	Finish	Color	A	B	C	D	E	F	G	H	Lifting Height	Weight
14001	10 25	Die Cast Zinc	Die-Casting	Powder Coated	Black	15.20mm	45.30mm	120.80mm	10.10mm	10.10mm	30.20mm	28.20mm	11.50mm	52.00mm	.2141 kg
14003	15 30 40					15.20mm	45.30mm	120.80mm	10.10mm	10.10mm	30.20mm	28.20mm	11.50mm	52.00mm	.2122 kg
14007	15 40					20.00mm	60.00mm	160.00mm	10.30mm	8.60mm	40.00mm	38.00mm	15.00mm	72.00mm	.5175 kg
14005	45					15.20mm	45.30mm	120.80mm	10.10mm	10.10mm	30.20mm	28.20mm	11.50mm	52.00mm	.2155 kg
14009	45					20.00mm	60.00mm	160.00mm	10.30mm	8.60mm	40.00mm	38.00mm	15.00mm	72.00mm	.5224 kg

Suggested Hardware (Mount to T-Slot)

Part No.	Bolt Assy.	Series	Qty.	Bolt	T-Nut
14001	3486	10	2	1/4-20 x 3/8 SHCS	Economy
14003	3493	15	2	1/4-20 x 5/8 SHCS	Economy
14007	3454	15	2	5/16-18 x 5/8 SHCS	Economy
14001	75-3520	25	2	M6 x 10mm SHCS	Economy
14003	75-3590	30	2	M6 x 10mm SHCS	Drop-In
14003	75-3593	40	2	M6 x 14mm SHCS	Drop-In
14007	75-3625	40	2	M8 x 16mm SHCS	Slide-In
14005	75-3594	45	2	M6 x 14mm SHCS	Drop-In
14009	75-3623	45	2	M8 x 16mm SHCS	Drop-In

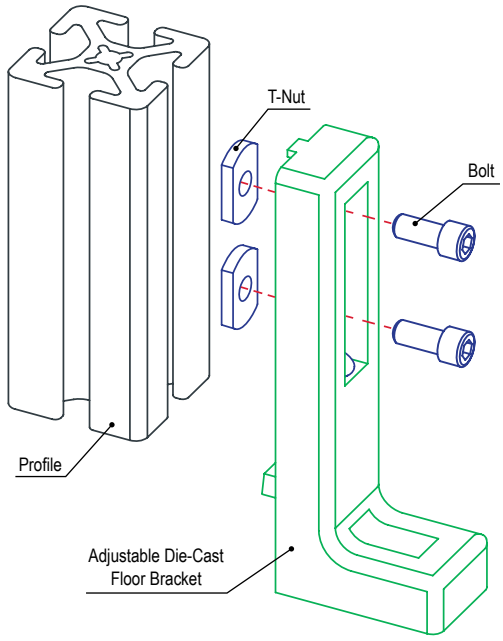

80/20 BUILD YOUR IDEA
More on 80/20® products available at 8020.net

Steel Floor Bracket

- Attaches directly to T-slot profile
- Use wedge anchors (pg. 5-30) to mount bracket directly to floor

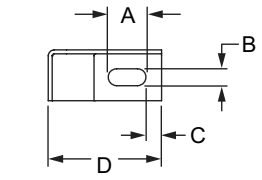

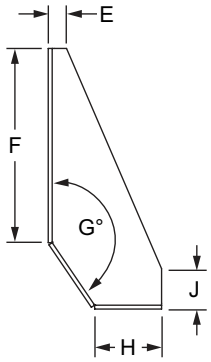

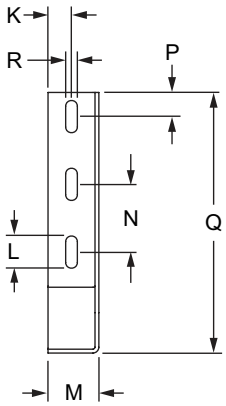

Part No.	Series	A	B	C	D	E	F	G	H	J	K	L	M	N	P	Q	R	Weight
14010	15 40 45	29.00mm	13.00mm	12.00mm	87.00mm	14.00mm	150.00mm	145.78°	53.00mm	31.00mm	19.50mm	25.00mm	39.00mm	52.00mm	18.50mm	200.00mm	9.00mm	.4273 kg

Material Specifications

Material	Process	Finish	Color
Steel	Stamped and Formed	Zinc	Bright

Suggested Hardware (Mount to T-Slot)

Part No.	Series	Qty.	Bolt	T-Nut
3450	15	3	5/16-18 x 1/2 SHCS	Economy
75-3624	40	3	M8 x 12mm SHCS	Slide-In
75-3623	45	3	M8 x 16mm SHCS	Drop-In

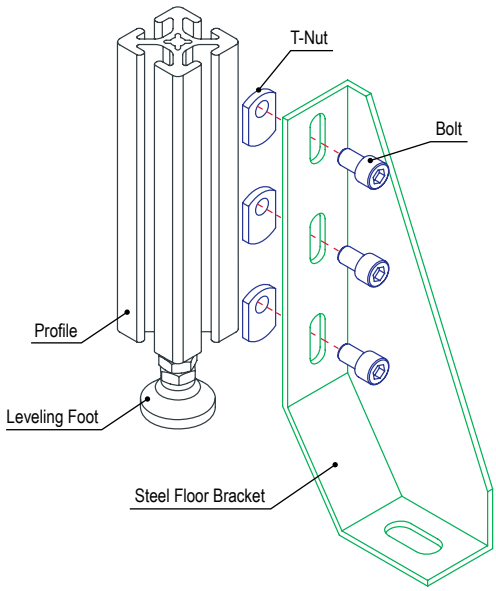

Casters & Feet

Aluminum Floor Bracket

- Attaches directly to 45-series T-slot
- Use wedge anchors (pg. 5-30) to mount bracket directly to floor

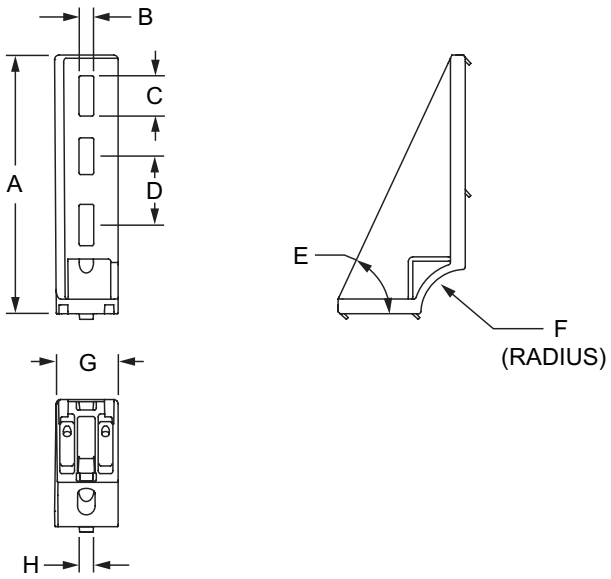

Part No.	Series	Material	Process	Finish	A	B	C	D	E	F	G	H	Weight
12028	45	Aluminum	Die-Casting	Natural	175.00mm	10.00mm	25.00mm	45.00mm	65°	30.00mm	43.00mm	10.00mm	.2600 kg

Suggested Hardware (Mount to T-Slot)

Part No.	Series	Qty.	Bolt	T-Nut
75-3630	45	2	M8 x 20mm SHCS	Drop-In

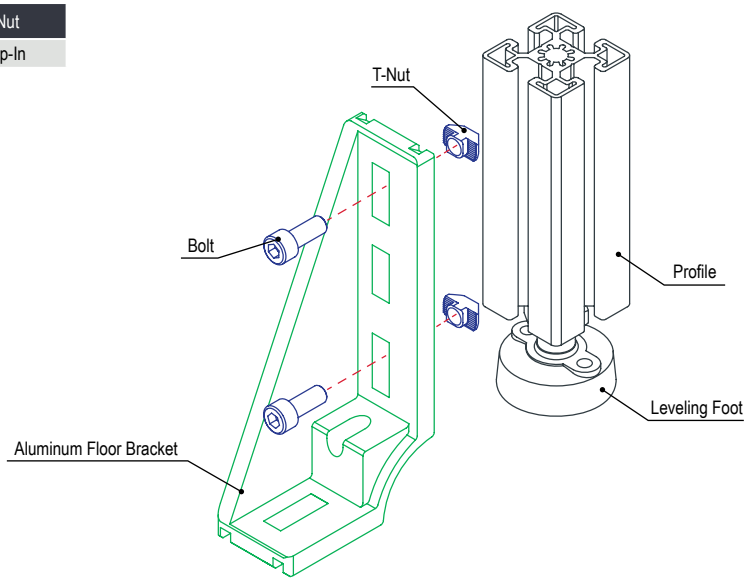

80/20 BUILD YOUR IDEA
More on 80/20® products available at 8020.net

Threaded End Bracket

- Used to add leveling foot to Quick Frame profile

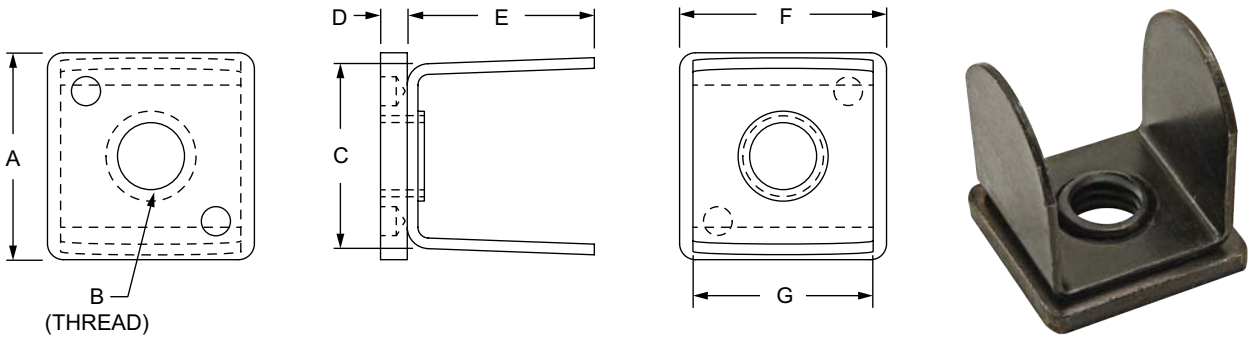

Part No.	Series	Material	Grade	Process	Finish	A	B	C	D	E	F	G	Weight
9350	QF	Steel	C1010	Stamping	Plain	.968"	5/16-18	.865"	.125"	.875"	.968"	.843"	.055 lb
9351						.968"	3/8-16	.865"	.125"	.875"	.968"	.843"	.054 lb

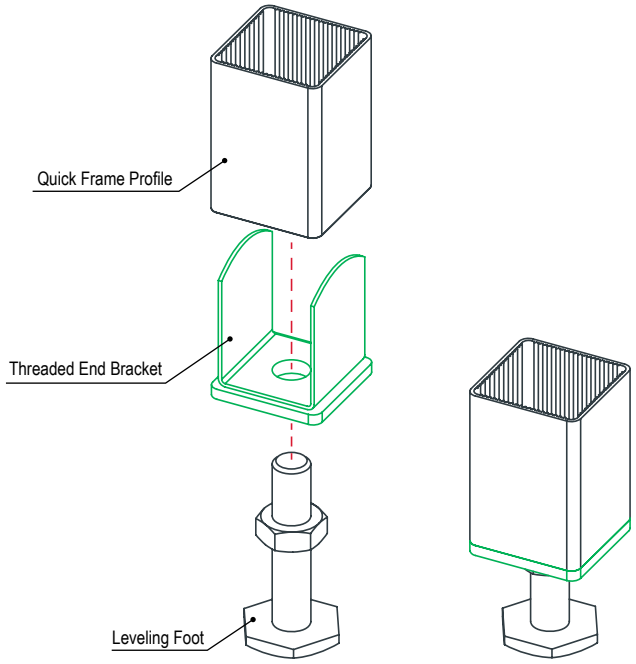

Casters & Feet

Flange Mount Caster Base Plate

- Mounts to end or side of profile
- Requires tap machining service (pg. 10-3) to mount to profile end

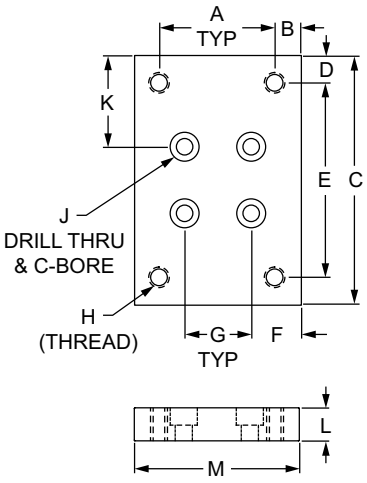

2418, 2420
25-2418, 40-2420

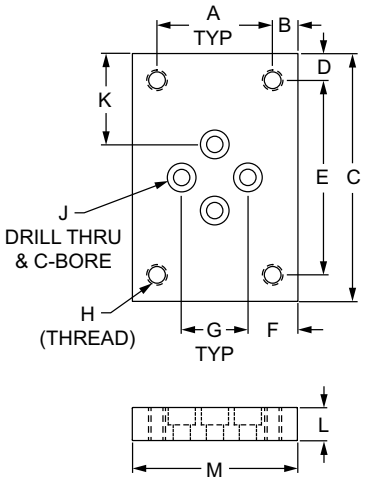

2419, 2426
25-2419, 40-2426

Part No.	Series	A	B	C	D	E	F	G	H	J	K	L	M	Weight
2418	10	1.750"	.375"	3.750"	.405"	2.940"	.750"	1.000"	5/16-18	1/4 SHCS	1.375"	.500"	2.500"	.424 lb
2418-Black	10	1.750"	.375"	3.750"	.405"	2.940"	.750"	1.000"	5/16-18	1/4 SHCS	1.375"	.500"	2.500"	.424 lb
2419	10	1.750"	.375"	3.750"	.405"	2.940"	.750"	1.000"	5/16-18	1/4 SHCS	1.375"	.500"	2.500"	.423 lb
2419-Black	10	1.750"	.375"	3.750"	.405"	2.940"	.750"	1.000"	5/16-18	1/4 SHCS	1.375"	.500"	2.500"	.423 lb
2426	15	1.750"	.625"	3.750"	.405"	2.940"	.750"	1.500"	5/16-18	5/16 SHCS	1.125"	.750"	3.000"	.765 lb
2426-Black	15	1.750"	.625"	3.750"	.405"	2.940"	.750"	1.500"	5/16-18	5/16 SHCS	1.125"	.750"	3.000"	.765 lb
2420	15	1.750"	.625"	3.750"	.405"	2.940"	.750"	1.500"	5/16-18	5/16 SHCS	1.125"	.750"	3.000"	.762 lb
2420-Black	15	1.750"	.625"	3.750"	.405"	2.940"	.750"	1.500"	5/16-18	5/16 SHCS	1.125"	.750"	3.000"	.762 lb
25-2418	25	44.50mm	9.00mm	95.00mm	10.20mm	74.60mm	18.75mm	25.00mm	M8 x 1.25	M6 SHCS	35.00mm	12.00mm	62.50mm	.1800 kg
25-2418-Black	25	44.50mm	9.00mm	95.00mm	10.20mm	74.60mm	18.75mm	25.00mm	M8 x 1.25	M6 SHCS	35.00mm	12.00mm	62.50mm	.1800 kg
25-2419	25	44.50mm	9.00mm	95.00mm	10.20mm	74.60mm	18.75mm	25.00mm	M8 x 1.25	M6 SHCS	35.00mm	12.00mm	62.50mm	.1800 kg
25-2419-Black	25	44.50mm	9.00mm	95.00mm	10.20mm	74.60mm	18.75mm	25.00mm	M8 x 1.25	M6 SHCS	35.00mm	12.00mm	62.50mm	.1800 kg
40-2426	40	44.40mm	17.80mm	97.00mm	11.20mm	74.60mm	20.00mm	40.00mm	M8 x 1.25	M8 SHCS	28.50mm	19.00mm	80.00mm	.3648 kg
40-2426-Black	40	44.40mm	17.80mm	97.00mm	11.20mm	74.60mm	20.00mm	40.00mm	M8 x 1.25	M8 SHCS	28.50mm	19.00mm	80.00mm	.3648 kg
40-2420	40	44.40mm	17.80mm	97.00mm	11.20mm	74.60mm	20.00mm	40.00mm	M8 x 1.25	M8 SHCS	28.50mm	19.00mm	80.00mm	.3682 kg
40-2420-Black	40	44.40mm	17.80mm	97.00mm	11.20mm	74.60mm	20.00mm	40.00mm	M8 x 1.25	M8 SHCS	28.50mm	19.00mm	80.00mm	.3682 kg

Material Specifications

Part No.	Material	Alloy	Process	Finish
2418	Aluminum	6005A – T61	Milled	Clear Anodize
2418-Black				Black Anodize
2419				Clear Anodize
2419-Black				Black Anodize
2426				Clear Anodize
2426-Black				Black Anodize
2420				Clear Anodize
2420-Black				Black Anodize
25-2418				Clear Anodize
25-2418-Black				Black Anodize
25-2419				Clear Anodize
25-2419-Black				Black Anodize
40-2426				Clear Anodize
40-2426-Black				Black Anodize
40-2420				Clear Anodize
40-2420-Black				Black Anodize

Required Machining Services

Machining Type	Machined	Reference Page
Tap Profile End	Mount to Profile End	10-3

Suggested Hardware (Mount to T-Slot)

Part No.	Series	Qty.	Bolt	T-Nut
3491	10	4	1/4-20 x 1/2" SHCS	Economy
3458	15	4	5/16-18 x 7/8" SHCS	Economy
75-3412	25	4	M6 x 12mm SHCS	Economy
75-3430	40	4	M8 x 20mm SHCS	Economy

Suggested Hardware (Mount to Profile End)

Part No.	Series	Qty.	Bolt
3064	10	4	1/4-20 x 3/4" SHCS
3123	15	4	5/16-18 x 1.25" SHCS
13-6516	25	4	M6 x 16mm SHCS (Blue)
13-8525	40	4	M8 x 25mm SHCS (Blue)

80/20 BUILD YOUR IDEA
More on 80/20® products available at 8020.net

Heavy-Duty Flange Mount Caster Base Plate

- Mounts to end or side of profile
- Requires tap machining service (pg. 10-3) to mount to profile end

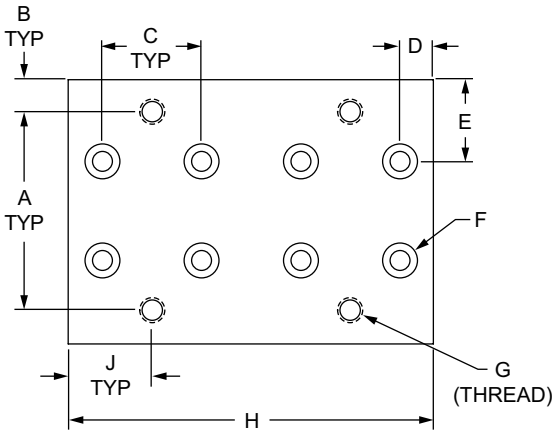

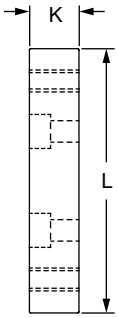

Part No.	Series	A	B	C	D	E	F	G	H	J	K	L	Weight
2147	15	3.000"	.500"	1.500"	.500"	1.250"	5/16 SHCS	3/8-16	5.500"	1.250"	.750"	4.000"	1.493 lb
2147-Black	15	3.000"	.500"	1.500"	.500"	1.250"	5/16 SHCS	3/8-16	5.500"	1.250"	.750"	4.000"	1.493 lb
40-2147	40	76.20mm	11.90mm	40.00mm	13.00mm	30.00mm	M8 SHCS	M10 x 1.5	146.00mm	34.90mm	19.00mm	100.00mm	.6917 kg
40-2147-Black	40	76.20mm	11.90mm	40.00mm	13.00mm	30.00mm	M8 SHCS	M10 x 1.5	146.00mm	34.90mm	19.00mm	100.00mm	.6917 kg

Material Specifications

Part No.	Material	Alloy	Process	Finish
2147	Aluminum	6005A – T61	Milled	Clear Anodize
2147-Black				Black Anodize
40-2147				Clear Anodize
40-2147-Black				Black Anodize

Required Machining Services

Machining Type	Machined	Reference Page
Tap Profile End	Mount to Profile End	10-3

Suggested Hardware (Mount to T-Slot)

Part No.	Series	Qty.	Bolt	T-Nut
3458	15	4 to 8	5/16-18 x 7/8" SHCS	Economy
75-3430	40	4 to 8	M8 x 20mm SHCS (Blue)	Economy

Suggested Hardware (Mount to Profile End)

Part No.	Series	Qty.	Bolt
3123	15	2 to 4	5/16-18 x 1.25" SHCS
13-8530	40	2 to 4	M8 x 30mm SHCS (Blue)

Casters & Feet

Leveling Caster Base Plate

- Mounts to end or side of profile
- Requires tap machining service (pg. 10-3) to mount to profile end

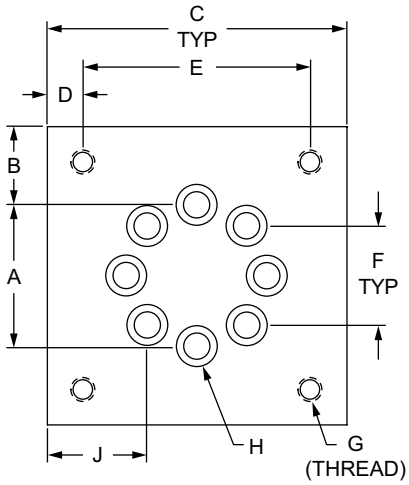

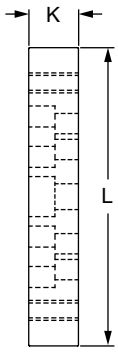

Part No.	Series	A	B	C	D	E	F	G	H	J	K	L	Weight
2406	10	1.414"	.793"	3.000"	.358"	2.284"	1.000"	1/4-20	1/4 SHCS	1.000"	.500"	3.000"	.396 lb
2406-Black	10	1.414"	.793"	3.000"	.358"	2.284"	1.000"	1/4-20	1/4 SHCS	1.000"	.500"	3.000"	.396 lb
2407	15	2.122"	.439"	3.000"	.358"	2.284"	1.500"	1/4-20	5/16 SHCS	.750"	.750"	3.000"	.567 lb
2407-Black	15	2.122"	.439"	3.000"	.358"	2.284"	1.500"	1/4-20	5/16 SHCS	.750"	.750"	3.000"	.567 lb
2408	15	2.122"	.689"	3.500"	.372"	2.756"	1.500"	5/16-18	5/16 SHCS	1.000"	.750"	3.500"	.793 lb
2408-Black	15	2.122"	.689"	3.500"	.372"	2.756"	1.500"	5/16-18	5/16 SHCS	1.000"	.750"	3.500"	.793 lb
2409	15	2.122"	.939"	4.000"	.622"	2.756"	1.500"	3/8-16	5/16 SHCS	1.250"	.750"	4.000"	1.057 lb
2409-Black	15	2.122"	.939"	4.000"	.622"	2.756"	1.500"	3/8-16	5/16 SHCS	1.250"	.750"	4.000"	1.057 lb
25-2406	25	35.36mm	20.42mm	76.20mm	9.09mm	58.02mm	25.00mm	M6 x 1.0	M6 SHCS	25.60mm	12.70mm	76.20mm	.1800 kg
25-2406-Black	25	35.36mm	20.42mm	76.20mm	9.09mm	58.02mm	25.00mm	M6 x 1.0	M6 SHCS	25.60mm	12.70mm	76.20mm	.1800 kg
40-2407	40	56.56mm	9.82mm	76.20mm	9.09mm	58.02mm	40.00mm	M6 x 1.0	M8 SHCS	18.10mm	19.05mm	76.20mm	.2558 kg
40-2407-Black	40	56.56mm	9.82mm	76.20mm	9.09mm	58.02mm	40.00mm	M6 x 1.0	M8 SHCS	18.10mm	19.05mm	76.20mm	.2558 kg
40-2408	40	56.56mm	16.17mm	88.90mm	9.45mm	70.00mm	40.00mm	M8 x 1.25	M8 SHCS	24.45mm	19.05mm	88.90mm	.3574 kg
40-2408-Black	40	56.56mm	16.17mm	88.90mm	9.45mm	70.00mm	40.00mm	M8 x 1.25	M8 SHCS	24.45mm	19.05mm	88.90mm	.3574 kg
40-2409	40	56.56mm	22.52mm	101.60mm	15.80mm	70.00mm	40.00mm	M10 x 1.50	M8 SHCS	30.80mm	19.05mm	101.60mm	.4779 kg
40-2409-Black	40	56.56mm	22.52mm	101.60mm	15.80mm	70.00mm	40.00mm	M10 x 1.50	M8 SHCS	30.80mm	19.05mm	101.60mm	.4779 kg

Material Specifications

Part No.	Material	Alloy	Process	Finish
2406	Aluminum	6005A – T61	Milled	Clear Anodize
2406-Black				Black Anodize
2407				Clear Anodize
2407-Black				Black Anodize
2408				Clear Anodize
2408-Black				Black Anodize
2409				Clear Anodize
2409-Black				Black Anodize
25-2406				Clear Anodize
25-2406-Black				Black Anodize
40-2407				Clear Anodize
40-2407-Black				Black Anodize
40-2408				Clear Anodize
40-2408-Black				Black Anodize
40-2409				Clear Anodize
40-2409-Black				Black Anodize

Required Machining Services

Machining Type	Machined	Reference Page
Tap Profile End	Mount to Profile End	10-3

Suggested Hardware (Mount to T-Slot)

Part No.	Series	Qty.	Bolt	T-Nut
3491	10	4	1/4-20 x 1/2" SHCS	Economy
3458	15	4	5/16-18 x 7/8" SHCS	Economy
75-3412	25	4	M6 x 12mm SHCS	Economy
75-3430	40	4	M8 x 20mm SHCS	Economy

Suggested Hardware (Mount to Profile End)

Part No.	Series	Qty.	Bolt
3064	10	4	1/4-20 x 3/4" SHCS
3123	15	4	5/16-18 x 1.25" SHCS
13-6516	25	4	M6 x 16mm SHCS (Blue)
13-8525	40	4	M8 x 25mm SHCS (Blue)

80/20 BUILD YOUR IDEA
More on 80/20® products available at 8020.net

Position Floor Lock Base Plate

- Mounts to end or side of profile
- Requires tap machining service (pg. 10-3) to mount to profile end

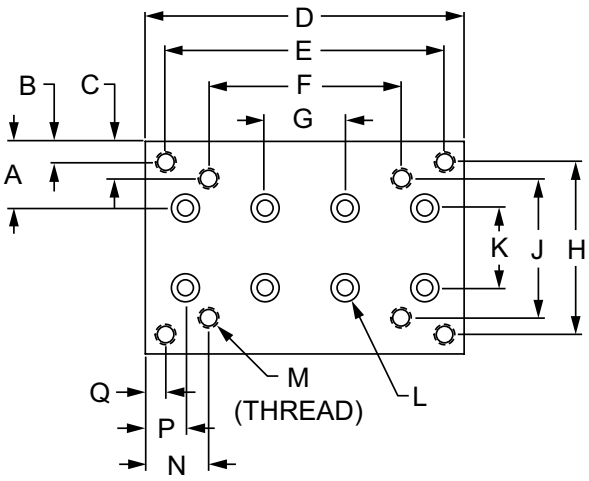

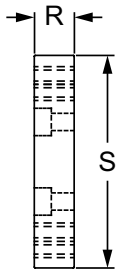

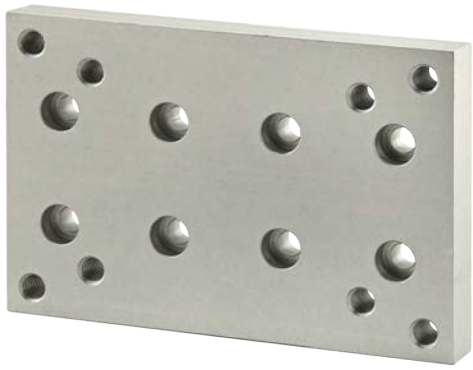

Part No.	Series	A	B	C	D	E	F	G	H	J
2148	15	1.250"	.375"	.688"	6.000"	5.250"	3.624"	1.500"	3.250"	2.624"
2148-Black	15	1.250"	.375"	.688"	6.000"	5.250"	3.624"	1.500"	3.250"	2.624"
40-2148	40	30.00mm	8.73mm	16.68mm	158.00mm	133.34mm	92.00mm	40.00mm	82.54mm	66.64mm
40-2148-Black	40	30.00mm	8.73mm	16.68mm	158.00mm	133.34mm	92.00mm	40.00mm	82.54mm	66.64mm

Part No.	Series	K	L	M	N	P	Q	R	S	Weight
2148	15	1.500"	5/16 SHCS	3/8-16	1.188"	.750"	.375"	.750"	4.000"	1.595 lb
2148-Black	15	1.500"	5/16 SHCS	3/8-16	1.188"	.750"	.375"	.750"	4.000"	1.595 lb
40-2148	40	40.00mm	M8 SHCS	M10 x 1.50	33.00mm	19.00mm	12.33mm	19.00mm	100.00mm	.7407 kg
40-2148-Black	40	40.00mm	M8 SHCS	M10 x 1.50	33.00mm	19.00mm	12.33mm	19.00mm	100.00mm	.7407 kg

Material Specifications

Part No.	Material	Alloy	Process	Finish
2148	Aluminum	6005A – T61	Milled	Clear Anodize
2148-Black				Black Anodize
40-2148				Clear Anodize
40-2148-Black				Black Anodize

Required Machining Services

Machining Type	Machined	Reference Page
Tap Profile End	Mount to Profile End	10-3

Suggested Hardware (Mount to T-Slot)

Part No.	Series	Qty.	Bolt	T-Nut
3458	15	4 to 8	5/16-18 x 7/8" SHCS	Economy
75-3430	40	4 to 8	M8 x 20mm SHCS (Blue)	Economy

Suggested Hardware (Mount to Profile End)

Part No.	Series	Qty.	Bolt
3123	15	4 to 8	5/16-18 x 1.25" SHCS
13-8530	40	4 to 8	M8 x 30mm SHCS (Blue)

Casters & Feet

3 Hole - Center Tap Base Plate

- Mounts leveling feet and threaded stem casters
- Requires tap machining service (pg. 10-3) for end mount
- Using M12 SHCS, base plate can only be mounted to profile end

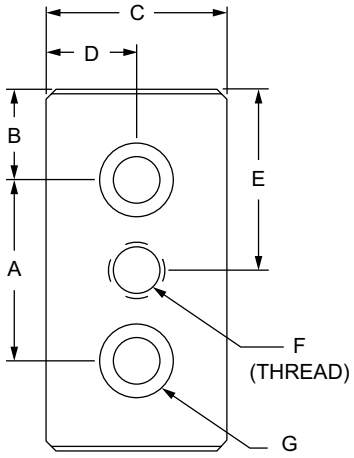

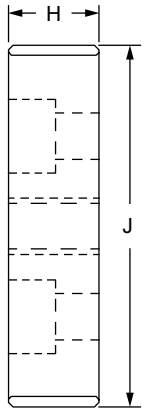

Part No.	Series	Material	Color	A	B	C	D	E	F	G	H	J	Weight
2124	10	Aluminum	Clear	1.000"	.500"	1.000"	.500"	1.000"	5/16-18	1/4 SHCS	.500"	2.000"	.084 lb
2124-Black	10		Black	1.000"	.500"	1.000"	.500"	1.000"	5/16-18	1/4 SHCS	.500"	2.000"	.084 lb
2128	10		Clear	1.000"	.500"	1.000"	.500"	1.000"	1/4-20	1/4 SHCS	.500"	2.000"	.086 lb
2128-Black	10		Black	1.000"	.500"	1.000"	.500"	1.000"	1/4-20	1/4 SHCS	.500"	2.000"	.086 lb
2129	10		Clear	1.000"	.500"	1.000"	.500"	1.000"	3/8-16	1/4 SHCS	.500"	2.000"	.083 lb
2129-Black	10		Black	1.000"	.500"	1.000"	.500"	1.000"	3/8-16	1/4 SHCS	.500"	2.000"	.083 lb
2137	10		Clear	1.000"	.500"	1.000"	.500"	1.000"	7/16-14	1/4 SHCS	.500"	2.000"	.082 lb
2137-Black	10		Black	1.000"	.500"	1.000"	.500"	1.000"	7/16-14	1/4 SHCS	.500"	2.000"	.082 lb
2361	10		Clear	1.000"	.500"	1.000"	.500"	1.000"	1/2-13	1/4 SHCS	.500"	2.000"	.079 lb
2361-Black	10		Black	1.000"	.500"	1.000"	.500"	1.000"	1/2-13	1/4 SHCS	.500"	2.000"	.079 lb
2130	15		Clear	1.500"	.750"	1.500"	.750"	1.500"	3/8-16	5/16 SHCS	.750"	3.000"	.298 lb
2130-Black	15		Black	1.500"	.750"	1.500"	.750"	1.500"	3/8-16	5/16 SHCS	.750"	3.000"	.298 lb
2135	15		Clear	1.500"	.750"	1.500"	.750"	1.500"	1/2-13	5/16 SHCS	.750"	3.000"	.294 lb
2135-Black	15		Black	1.500"	.750"	1.500"	.750"	1.500"	1/2-13	5/16 SHCS	.750"	3.000"	.294 lb
2138	15		Clear	1.500"	.750"	1.500"	.750"	1.500"	7/16-14	5/16 SHCS	.750"	3.000"	.297 lb
2138-Black	15		Black	1.500"	.750"	1.500"	.750"	1.500"	7/16-14	5/16 SHCS	.750"	3.000"	.297 lb
2365	15		Clear	1.500"	.750"	1.500"	.750"	1.500"	3/4-10	5/16 SHCS	.750"	3.000"	.277 lb
2365-Black	15		Black	1.500"	.750"	1.500"	.750"	1.500"	3/4-10	5/16 SHCS	.750"	3.000"	.277 lb
25-2128	25		Clear	25.00mm	12.50mm	25.00mm	12.50mm	25.00mm	M6 x 1.0	M6 SHCS	12.00mm	50.00mm	.0358 kg
25-2128-Black	25		Black	25.00mm	12.50mm	25.00mm	12.50mm	25.00mm	M6 x 1.0	M6 SHCS	12.00mm	50.00mm	.0358 kg
25-2129	25		Clear	25.00mm	12.50mm	25.00mm	12.50mm	25.00mm	M8 x 1.25	M6 SHCS	12.00mm	50.00mm	.0347 kg
25-2129-Black	25		Black	25.00mm	12.50mm	25.00mm	12.50mm	25.00mm	M8 x 1.25	M6 SHCS	12.00mm	50.00mm	.0347 kg
25-2137	25		Clear	25.00mm	12.50mm	25.00mm	12.50mm	25.00mm	M10 x 1.50	M6 SHCS	12.00mm	50.00mm	.0340 kg
25-2137-Black	25		Black	25.00mm	12.50mm	25.00mm	12.50mm	25.00mm	M10 x 1.50	M6 SHCS	12.00mm	50.00mm	.0340 kg
25-2361	25		Clear	25.00mm	12.50mm	25.00mm	12.50mm	25.00mm	M12 x 1.75	M6 SHCS	12.00mm	50.00mm	.0327 kg
25-2361-Black	25		Black	25.00mm	12.50mm	25.00mm	12.50mm	25.00mm	M12 x 1.75	M6 SHCS	12.00mm	50.00mm	.0327 kg
40-2130	40		Clear	40.00mm	20.00mm	40.00mm	20.00mm	40.00mm	M10 x 1.50	M8 SHCS	19.00mm	80.00mm	.1485 kg
40-2130-Black	40		Black	40.00mm	20.00mm	40.00mm	20.00mm	40.00mm	M10 x 1.50	M8 SHCS	19.00mm	80.00mm	.1485 kg
40-2135	40		Clear	40.00mm	20.00mm	40.00mm	20.00mm	40.00mm	M12 x 1.75	M8 SHCS	19.00mm	80.00mm	.1471 kg
40-2135-Black	40		Black	40.00mm	20.00mm	40.00mm	20.00mm	40.00mm	M12 x 1.75	M8 SHCS	19.00mm	80.00mm	.1471 kg
40-2138	40		Clear	40.00mm	20.00mm	40.00mm	20.00mm	40.00mm	M16 x 2.0	M8 SHCS	19.00mm	80.00mm	.1433 kg
40-2138-Black	40		Black	40.00mm	20.00mm	40.00mm	20.00mm	40.00mm	M16 x 2.0	M8 SHCS	19.00mm	80.00mm	.1433 kg
40-2365	40		Clear	40.00mm	20.00mm	40.00mm	20.00mm	40.00mm	M20 x 2.5	M8 SHCS	19.00mm	80.00mm	.1380 kg
40-2365-Black	40		Black	40.00mm	20.00mm	40.00mm	20.00mm	40.00mm	M20 x 2.5	M8 SHCS	19.00mm	80.00mm	.1380 kg

80/20 BUILD YOUR IDEA
More on 80/20® products available at 8020.net

3 Hole - Center Tap Base Plate (Continued)

Part No.	Series	Material	Color	A	B	C	D	E	F	G	H	J	Weight
14021	30	Zinc	Black	30.00mm	15.00mm	30.00mm	15.00mm	30.00mm	M8 x 1.25	M8 SHCS	12.00mm	60.00mm	.2100 kg
14023	30			30.00mm	15.00mm	30.00mm	15.00mm	30.00mm	M10 x 1.50	M8 SHCS	12.00mm	60.00mm	.2030 kg
14025	30			30.00mm	15.00mm	30.00mm	15.00mm	30.00mm	M12 x 1.75	M8 SHCS	12.00mm	60.00mm	.2000 kg
14027	45			45.00mm	22.50mm	45.00mm	22.50mm	45.00mm	M10 x 1.50	M8 SHCS	16.00mm	90.00mm	.2803 kg
14028	45			45.00mm	22.50mm	45.00mm	22.50mm	45.00mm	M10 x 1.50	M12 SHCS	16.00mm	90.00mm	.2521 kg
14029	45			45.00mm	22.50mm	45.00mm	22.50mm	45.00mm	M12 x 1.75	M8 SHCS	16.00mm	90.00mm	.6160 kg
14030	45			45.00mm	22.50mm	45.00mm	22.50mm	45.00mm	M12 x 1.75	M12 SHCS	16.00mm	90.00mm	.5570 kg
14032	45			45.00mm	22.50mm	45.00mm	22.50mm	45.00mm	M16 x 2.0	M12 SHCS	16.00mm	90.00mm	.5390 kg

Aluminum Material Specifications

Material	Alloy	Process	Finish
Aluminum	6005A – T61	Milled	Anodize

Die-Cast Material Specifications

Material	Grade	Process	Finish
Zinc	GD-ZnAlCU1	Die Cast	Powder Coat

Required Machining Services

Machining Type	Machined	Reference Page
Tap Profile End	Mount to Profile End	10-3

Suggested Hardware (Mount to T-Slot)

Part No.	Series	Qty.	Bolt	Part No.	Qty.	T-Nut
3491	10	2	1/4-20 x 1/2" SHCS	-	-	Economy
3458	15	2	5/16-18 x 7/8" SHCS	-	-	Economy
75-3412	25	2	M6 x 12mm SHCS	-	-	Economy
11-8512	30	2	M8 x 12mm SHCS	13095	2	Roll-in
75-3430	40	2	M8 x 20mm SHCS	-	-	Economy
11-8520	45	2	M8 x 20mm SHCS	13132	2	Drop-in

Suggested Hardware (Mount to Profile End)

Part No.	Series	Qty.	Bolt
3064	10	2	1/4-20 x 3/4" SHCS
3123	15	2	5/16-18 x 1.25" SHCS
13-6516	25	2	M6 x 16mm SHCS (Blue)
11-8520	30	2	M8 x 20mm SHCS
13-8525	40	2	M8 x 25mm SHCS (Blue)
11-2525	45	2	M12 x 25mm LHSCS

Casters & Feet

5 Hole - Center Tap Base Plate

- Mounts leveling feet and threaded stem casters
- Requires tap machining service (pg. 10-3) for end mount
- Using M12 SHCS, base plate can only be mounted to profile end

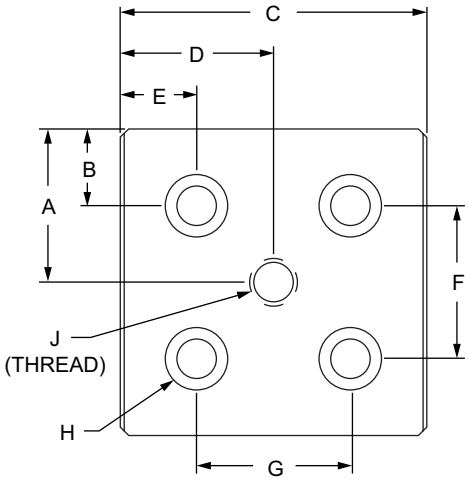

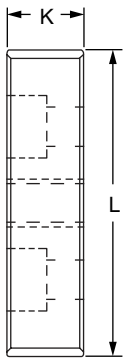

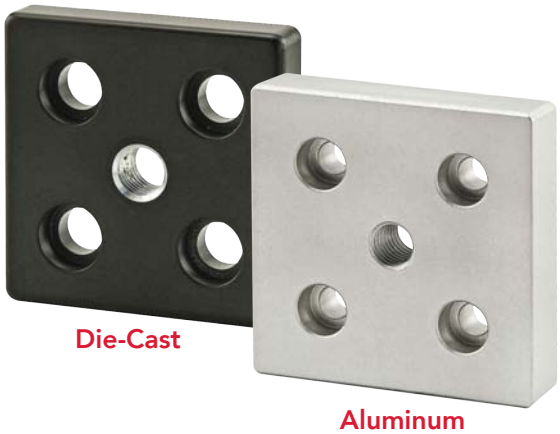

Part No.	Series	Material	Color	A	B	C	D	E	F	G	H	J	K	L	Weight
2127	10	Aluminum	Clear	1.000"	.500"	2.000"	1.000"	.500"	1.000"	1.000"	1/4 SHCS	5/16-18	.500"	2.000"	.172 lb
2127-Black	10		Black	1.000"	.500"	2.000"	1.000"	.500"	1.000"	1.000"	1/4 SHCS	5/16-18	.500"	2.000"	.172 lb
2131	10		Clear	1.000"	.500"	2.000"	1.000"	.500"	1.000"	1.000"	1/4 SHCS	3/8-16	.500"	2.000"	.169 lb
2131-Black	10		Black	1.000"	.500"	2.000"	1.000"	.500"	1.000"	1.000"	1/4 SHCS	3/8-16	.500"	2.000"	.169 lb
2132	10		Clear	1.000"	.500"	2.000"	1.000"	.500"	1.000"	1.000"	1/4 SHCS	1/2-13	.500"	2.000"	.166 lb
2132-Black	10		Black	1.000"	.500"	2.000"	1.000"	.500"	1.000"	1.000"	1/4 SHCS	1/2-13	.500"	2.000"	.166 lb
2139	10		Clear	1.000"	.500"	2.000"	1.000"	.500"	1.000"	1.000"	1/4 SHCS	7/16-14	.500"	2.000"	.168 lb
2139-Black	10		Black	1.000"	.500"	2.000"	1.000"	.500"	1.000"	1.000"	1/4 SHCS	7/16-14	.500"	2.000"	.168 lb
2362	10		Clear	1.000"	.500"	2.000"	1.000"	.500"	1.000"	1.000"	1/4 SHCS	3/4-10	.500"	2.000"	.156 lb
2362-Black	10		Black	1.000"	.500"	2.000"	1.000"	.500"	1.000"	1.000"	1/4 SHCS	3/4-10	.500"	2.000"	.156 lb
2140	15		Clear	1.500"	.750"	3.000"	1.500"	.750"	1.500"	1.500"	5/16 SHCS	1/2-13	.750"	3.000"	.604 lb
2140-Black	15		Black	1.500"	.750"	3.000"	1.500"	.750"	1.500"	1.500"	5/16 SHCS	1/2-13	.750"	3.000"	.604 lb
2145	15		Clear	1.500"	.750"	3.000"	1.500"	.750"	1.500"	1.500"	5/16 SHCS	7/16-14	.750"	3.000"	.607 lb
2145-Black	15		Black	1.500"	.750"	3.000"	1.500"	.750"	1.500"	1.500"	5/16 SHCS	7/16-14	.750"	3.000"	.607 lb
2366	15		Clear	1.500"	.750"	3.000"	1.500"	.750"	1.500"	1.500"	5/16 SHCS	3/4-10	.750"	3.000"	.588 lb
2366-Black	15		Black	1.500"	.750"	3.000"	1.500"	.750"	1.500"	1.500"	5/16 SHCS	3/4-10	.750"	3.000"	.588 lb
25-2131	25		Clear	25.00mm	12.50mm	50.00mm	25.00mm	12.50mm	25.00mm	25.00mm	M6 SHCS	M10 x 1.50	12.00mm	50.00mm	.0700 kg
25-2131-Black	25		Black	25.00mm	12.50mm	50.00mm	25.00mm	12.50mm	25.00mm	25.00mm	M6 SHCS	M10 x 1.50	12.00mm	50.00mm	.0700 kg
25-2132	25		Clear	25.00mm	12.50mm	50.00mm	25.00mm	12.50mm	25.00mm	25.00mm	M6 SHCS	M16 x 2.0	12.00mm	50.00mm	.0700 kg
25-2132-Black	25		Black	25.00mm	12.50mm	50.00mm	25.00mm	12.50mm	25.00mm	25.00mm	M6 SHCS	M16 x 2.0	12.00mm	50.00mm	.0700 kg
25-2139	25		Clear	25.00mm	12.50mm	50.00mm	25.00mm	12.50mm	25.00mm	25.00mm	M6 SHCS	M12 x 1.75	12.00mm	50.00mm	.0689 kg
25-2139-Black	25		Black	25.00mm	12.50mm	50.00mm	25.00mm	12.50mm	25.00mm	25.00mm	M6 SHCS	M12 x 1.75	12.00mm	50.00mm	.0689 kg
25-2362	25		Clear	25.00mm	12.50mm	50.00mm	25.00mm	12.50mm	25.00mm	25.00mm	M6 SHCS	M20 x 2.5	12.00mm	50.00mm	.0630 kg
25-2362-Black	25		Black	25.00mm	12.50mm	50.00mm	25.00mm	12.50mm	25.00mm	25.00mm	M6 SHCS	M20 x 2.5	12.00mm	50.00mm	.0630 kg
40-2140	40		Clear	40.00mm	20.00mm	80.00mm	40.00mm	20.00mm	40.00mm	40.00mm	M8 SHCS	M12 x 1.75	19.00mm	80.00mm	.3002 kg
40-2140-Black	40		Black	40.00mm	20.00mm	80.00mm	40.00mm	20.00mm	40.00mm	40.00mm	M8 SHCS	M12 x 1.75	19.00mm	80.00mm	.3002 kg
40-2145	40		Clear	40.00mm	20.00mm	80.00mm	40.00mm	20.00mm	40.00mm	40.00mm	M8 SHCS	M16 x 2.0	19.00mm	80.00mm	.2950 kg
40-2145-Black	40		Black	40.00mm	20.00mm	80.00mm	40.00mm	20.00mm	40.00mm	40.00mm	M8 SHCS	M16 x 2.0	19.00mm	80.00mm	.2950 kg
40-2366	40		Clear	40.00mm	20.00mm	80.00mm	40.00mm	20.00mm	40.00mm	40.00mm	M8 SHCS	M20 x 2.5	19.00mm	80.00mm	.2921 kg
40-2366-Black	40		Black	40.00mm	20.00mm	80.00mm	40.00mm	20.00mm	40.00mm	40.00mm	M8 SHCS	M20 x 2.5	19.00mm	80.00mm	.2921 kg

80/20 BUILD YOUR IDEA
More on 80/20® products available at 8020.net

5 Hole - Center Tap Base Plate (Continued)

Part No.	Series	Material	Color	A	B	C	D	E	F	G	H	J	K	L	Weight
14035	30	Zinc	Black	30.00mm	15.00mm	60.00mm	30.00mm	15.00mm	30.00mm	30.00mm	M8 SHCS	M8 x 1.25	12.00mm	60.00mm	.3710 kg
14037	30			30.00mm	15.00mm	60.00mm	30.00mm	15.00mm	30.00mm	30.00mm	M8 SHCS	M10 x 1.50	12.00mm	60.00mm	.3520 kg
14039	30			30.00mm	15.00mm	60.00mm	30.00mm	15.00mm	30.00mm	30.00mm	M8 SHCS	M12 x 1.75	12.00mm	60.00mm	.3470 kg
14041	30			30.00mm	15.00mm	60.00mm	30.00mm	15.00mm	30.00mm	30.00mm	M8 SHCS	M16 x 2.0	12.00mm	60.00mm	.3390 kg
14043	45			45.00mm	22.50mm	90.00mm	45.00mm	22.50mm	45.00mm	45.00mm	M12 SHCS	M10 x 1.50	16.00mm	90.00mm	1.0680 kg
14045	45			45.00mm	22.50mm	90.00mm	45.00mm	22.50mm	45.00mm	45.00mm	M12 SHCS	M12 x 1.75	16.00mm	90.00mm	1.0680 kg
14047	45			45.00mm	22.50mm	90.00mm	45.00mm	22.50mm	45.00mm	45.00mm	M12 SHCS	M16 x 2.0	16.00mm	90.00mm	1.0380 kg

Aluminum Material Specifications

Material	Alloy	Process	Finish
Aluminum	6005A – T61	Milled	Anodize

Die-Cast Material Specifications

Material	Grade	Process	Finish
Zinc	GD-ZnAlCU1	Die Cast	Powder Coat

Required Machining Services

Machining Type	Machined	Reference Page
Tap Profile End	Mount to Profile End	10-3

Suggested Hardware (Mount to T-Slot)

Part No.	Series	Qty.	Bolt	Part No.	Qty.	T-Nut
3491	10	4	1/4-20 x 1/2" SHCS	-	-	Economy
3458	15	4	5/16-18 x 7/8" SHCS	-	-	Economy
75-3412	25	4	M6 x 12mm SHCS	-	-	Economy
11-8512	30	4	M8 x 12mm SHCS	13095	4	Roll-in
75-3430	40	4	M8 x 20mm SHCS	-	-	Economy
11-8520	45	4	M8 x 20mm SHCS	13132	4	Drop-in

Suggested Hardware (Mount to Profile End)

Part No.	Series	Qty.	Bolt
3064	10	4	1/4-20 x 3/4" SHCS
3123	15	4	5/16-18 x 1.25" SHCS
13-6516	25	4	M6 x 16mm SHCS (Blue)
11-8520	30	4	M8 x 20mm SHCS
13-8525	40	4	M8 x 25mm SHCS (Blue)
11-2525	45	4	M12 x 25mm LHSCS

Casters & Feet

4 Hole - Offset Tap Base Plate

- Mounts leveling feet and threaded stem casters
- Requires tap machining service (pg. 10-3) for end mount
- Offset provides greater clearance for threaded stem

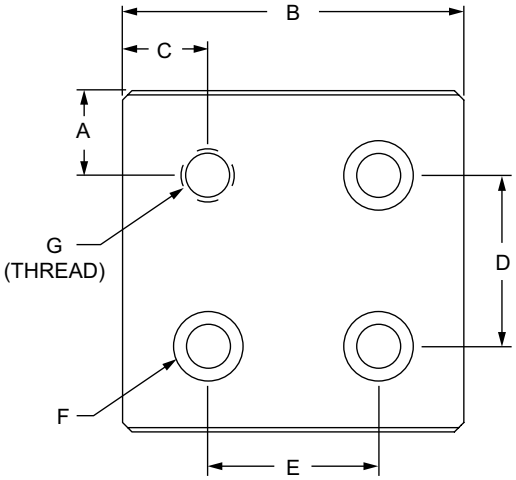

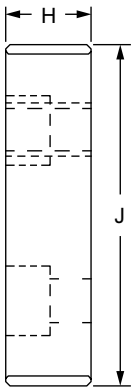

Part No.	Series	Color	A	B	C	D	E	F	G	H	J	Weight
2136	10	Clear	.500"	2.000"	.500"	1.000"	1.000"	1/4 SHCS	5/16-18	.500"	2.000"	.176 lb
2136-Black	10	Black	.500"	2.000"	.500"	1.000"	1.000"	1/4 SHCS	5/16-18	.500"	2.000"	.176 lb
2142	10	Clear	.500"	2.000"	.500"	1.000"	1.000"	1/4 SHCS	3/8-16	.500"	2.000"	.175 lb
2142-Black	10	Black	.500"	2.000"	.500"	1.000"	1.000"	1/4 SHCS	3/8-16	.500"	2.000"	.175 lb
2143	10	Clear	.500"	2.000"	.500"	1.000"	1.000"	1/4 SHCS	7/16-14	.500"	2.000"	.173 lb
2143-Black	10	Black	.500"	2.000"	.500"	1.000"	1.000"	1/4 SHCS	7/16-14	.500"	2.000"	.173 lb
2363	10	Clear	.500"	2.000"	.500"	1.000"	1.000"	1/4 SHCS	1/2-13	.500"	2.000"	.171 lb
2363-Black	10	Black	.500"	2.000"	.500"	1.000"	1.000"	1/4 SHCS	1/2-13	.500"	2.000"	.171 lb
2364	10	Clear	.500"	2.000"	.500"	1.000"	1.000"	1/4 SHCS	3/4-10	.500"	2.000"	.160 lb
2364-Black	10	Black	.500"	2.000"	.500"	1.000"	1.000"	1/4 SHCS	3/4-10	.500"	2.000"	.160 lb
2141	15	Clear	.750"	3.000"	.750"	1.500"	1.500"	5/16 SHCS	1/2-13	.750"	3.000"	.616 lb
2141-Black	15	Black	.750"	3.000"	.750"	1.500"	1.500"	5/16 SHCS	1/2-13	.750"	3.000"	.616 lb
2146	15	Clear	.750"	3.000"	.750"	1.500"	1.500"	5/16 SHCS	7/16-14	.750"	3.000"	.618 lb
2146-Black	15	Black	.750"	3.000"	.750"	1.500"	1.500"	5/16 SHCS	7/16-14	.750"	3.000"	.618 lb
2367	15	Clear	.750"	3.000"	.750"	1.500"	1.500"	5/16 SHCS	3/4-10	.750"	3.000"	.599 lb
2367-Black	15	Black	.750"	3.000"	.750"	1.500"	1.500"	5/16 SHCS	3/4-10	.750"	3.000"	.599 lb
25-2142	25	Clear	12.50mm	50.00mm	12.50mm	25.00mm	25.00mm	M6 SHCS	M10 x 1.50	12.00mm	50.00mm	.0717 kg
25-2142-Black	25	Black	12.50mm	50.00mm	12.50mm	25.00mm	25.00mm	M6 SHCS	M10 x 1.50	12.00mm	50.00mm	.0717 kg
40-2141	40	Clear	20.00mm	80.00mm	20.00mm	40.00mm	40.00mm	M8 SHCS	M12 x 1.75	19.00mm	80.00mm	.3065 kg
40-2141-Black	40	Black	20.00mm	80.00mm	20.00mm	40.00mm	40.00mm	M8 SHCS	M12 x 1.75	19.00mm	80.00mm	.3065 kg
40-2146	40	Clear	20.00mm	80.00mm	20.00mm	40.00mm	40.00mm	M8 SHCS	M16 x 2.0	19.00mm	80.00mm	.3030 kg
40-2146-Black	40	Black	20.00mm	80.00mm	20.00mm	40.00mm	40.00mm	M8 SHCS	M16 x 2.0	19.00mm	80.00mm	.3030 kg
40-2367	40	Clear	20.00mm	80.00mm	20.00mm	40.00mm	40.00mm	M8 SHCS	M20 x 2.5	19.00mm	80.00mm	.2963 kg
40-2367-Black	40	Black	20.00mm	80.00mm	20.00mm	40.00mm	40.00mm	M8 SHCS	M20 x 2.5	19.00mm	80.00mm	.2963 kg

Material Specifications

Material	Alloy	Process	Finish
Aluminum	6005A – T61	Milled	Anodize

Required Machining Services

Machining Type	Machined	Reference Page
Tap Profile End	Mount to Profile End	10-3

Suggested Hardware (Mount to T-Slot)

Part No.	Series	Qty.	Bolt	T-Nut
3491	10	3	1/4-20 x 1/2" SHCS	Economy
3458	15	3	5/16-18 x 7/8" SHCS	Economy
75-3412	25	3	M6 x 12mm SHCS	Economy
75-3430	40	3	M8 x 20mm SHCS	Economy

80/20 BUILD YOUR IDEA
More on 80/20® products available at 8020.net

2 Hole - Leveling Anchoring Base Plate

- Mounts to profile end; provides offset hole that allows leveling foot and floor anchor to be used at the same time
- Extension pin helps align base plate within T-slot to keep profile from rotating
- Requires tap machining service (pg. 10-3) for end mount

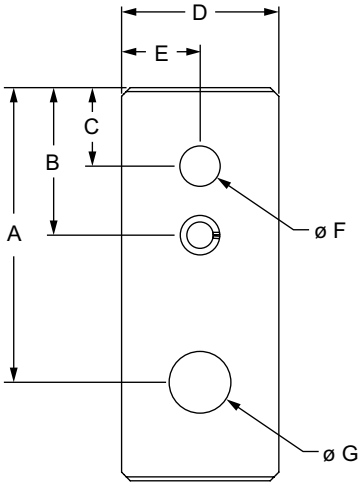

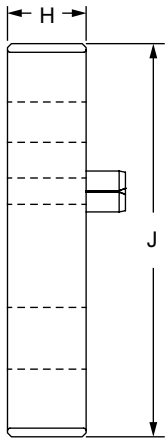

Part No.	Series	Color	A	B	C	D	E	F	G	H	J	Weight
2166	10	Clear	1.875"	.940"	.500"	1.000"	.500"	.257"	.390"	.500"	2.500"	.116 lb
2166-Black	10	Black	1.875"	.940"	.500"	1.000"	.500"	.257"	.390"	.500"	2.500"	.116 lb
2165	15	Clear	2.500"	1.410"	.750"	1.500"	.750"	.390"	.531"	.500"	3.000"	.215 lb
2165-Black	15	Black	2.500"	1.410"	.750"	1.500"	.750"	.390"	.531"	.500"	3.000"	.215 lb
40-2165	40	Clear	66.68mm	37.90mm	20.00mm	40.00mm	20.00mm	9.91mm	13.49mm	12.00mm	80.00mm	.1009 kg
40-2165-Black	40	Black	66.68mm	37.90mm	20.00mm	40.00mm	20.00mm	9.91mm	13.49mm	12.00mm	80.00mm	.1009 kg

Material Specifications

Material	Alloy	Process	Finish
Aluminum	6005A – T61	Milled	Anodize

Required Machining Services

Machining Type	Machined	Reference Page
Tap Profile End	Mount to Profile End	10-3

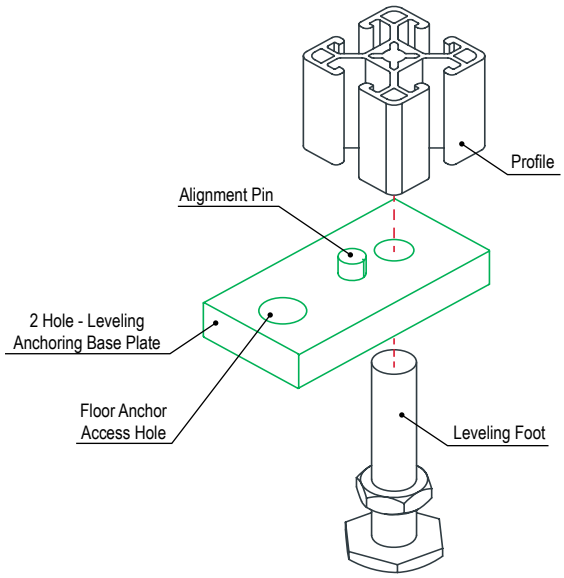

Casters & Feet

4 Hole - Leveling Anchoring Base Plate

- Mounts to profile end; provides offset hole that allows leveling foot and floor anchor to be used at the same time
- Mounting hardware helps align base plate within T-slot to keep profile from rotating
- Requires tap machining service (pg. 10-3) for end mount

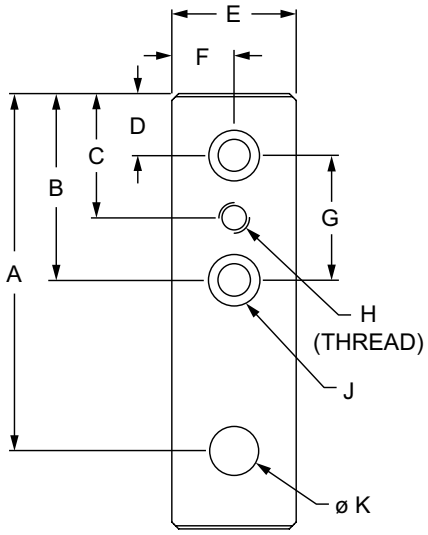

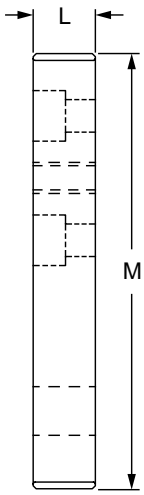

Part No.	Series	Color	A	B	C	D	E	F	G	H	J	K	L	M	Weight
2167	10	Clear	2.875"	1.500"	1.000"	.500"	1.000"	.500"	1.000"	1/4-20	1/4 SHCS	.390"	.500"	3.500"	.153 lb
2167-Black	10	Black	2.875"	1.500"	1.000"	.500"	1.000"	.500"	1.000"	1/4-20	1/4 SHCS	.390"	.500"	3.500"	.153 lb
2168	10	Clear	2.875"	1.500"	1.000"	.500"	1.000"	.500"	1.000"	3/8-16	1/4 SHCS	.390"	.500"	3.500"	.150 lb
2168-Black	10	Black	2.875"	1.500"	1.000"	.500"	1.000"	.500"	1.000"	3/8-16	1/4 SHCS	.390"	.500"	3.500"	.150 lb
2170	15	Clear	4.000"	2.250"	1.500"	.750"	1.500"	.750"	1.500"	3/8-16	5/16 SHCS	.531"	.750"	4.500"	.445 lb
2170-Black	15	Black	4.000"	2.250"	1.500"	.750"	1.500"	.750"	1.500"	3/8-16	5/16 SHCS	.531"	.750"	4.500"	.445 lb
2175	15	Clear	4.000"	2.250"	1.500"	.750"	1.500"	.750"	1.500"	1/2-13	5/16 SHCS	.531"	.750"	4.500"	.441 lb
2175-Black	15	Black	4.000"	2.250"	1.500"	.750"	1.500"	.750"	1.500"	1/2-13	5/16 SHCS	.531"	.750"	4.500"	.441 lb
40-2170	40	Clear	106.68mm	60.00mm	40.00mm	20.00mm	40.00mm	20.00mm	40.00mm	M10 x 1.50	M8 SHCS	13.50mm	19.00mm	120.00mm	.2216 kg
40-2170-Black	40	Black	106.68mm	60.00mm	40.00mm	20.00mm	40.00mm	20.00mm	40.00mm	M10 x 1.50	M8 SHCS	13.50mm	19.00mm	120.00mm	.2216 kg
40-2175	40	Clear	106.68mm	60.00mm	40.00mm	20.00mm	40.00mm	20.00mm	40.00mm	M12 x 1.75	M8 SHCS	13.50mm	19.00mm	120.00mm	.2199 kg
40-2175-Black	40	Black	106.68mm	60.00mm	40.00mm	20.00mm	40.00mm	20.00mm	40.00mm	M12 x 1.75	M8 SHCS	13.50mm	19.00mm	120.00mm	.2199 kg

Material Specifications

Material	Alloy	Process	Finish
Aluminum	6005A – T61	Milled	Anodize

Required Machining Services

Machining Type	Machined	Reference Page
Tap Profile End	Mount to Profile End	10-3

Suggested Hardware (Mount to T-Slot)

Part No.	Series	Qty.	Bolt	T-Nut
3491	10	2	1/4-20 x 1/2" SHCS	Economy
3458	15	2	5/16-18 x 7/8" SHCS	Economy
75-3430	40	2	M8 x 20mm SHCS	Economy

Suggested Hardware (Mount to Profile End)

Part No.	Series	Qty.	Bolt
3064	10	2	1/4-20 x 3/4" SHCS
3123	15	2	5/16-18 x 1.25" SHCS
13-8525	40	2	M8 x 25mm SHCS (Blue)

80/20 BUILD YOUR IDEA
More on 80/20® products available at 8020.net

6 Hole - Leveling Anchoring Base Plate

- Mounts to profile end; provides offset hole that allows leveling foot and floor anchor to be used at the same time
- Requires tap machining service (pg. 10-3) for end mount

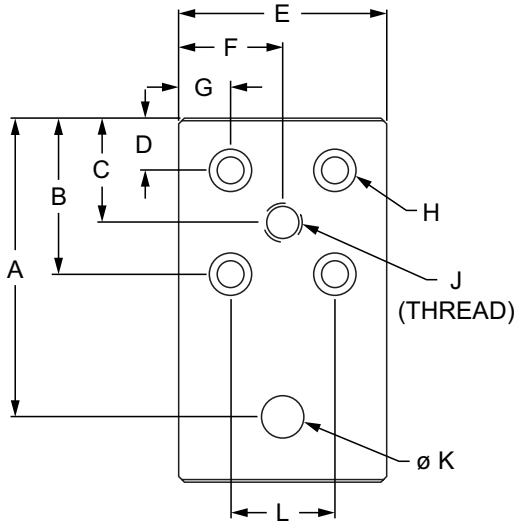

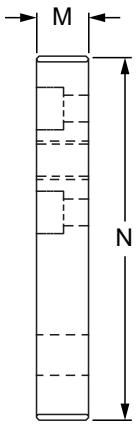

Part No.	Series	Color	A	B	C	D	E	F	G	H	J	K	L	M	N	Weight
2169	10	Clear	2.875"	1.500"	1.000"	.500"	2.000"	1.000"	.500"	1/4 SHCS	3/8-16	.390"	1.000"	.500"	3.500"	.308 lb
2169-Black	10	Black	2.875"	1.500"	1.000"	.500"	2.000"	1.000"	.500"	1/4 SHCS	3/8-16	.390"	1.000"	.500"	3.500"	.308 lb
2171	10	Clear	2.875"	1.500"	1.000"	.500"	2.000"	1.000"	.500"	1/4 SHCS	1/2-13	.390"	1.000"	.500"	3.500"	.305 lb
2171-Black	10	Black	2.875"	1.500"	1.000"	.500"	2.000"	1.000"	.500"	1/4 SHCS	1/2-13	.390"	1.000"	.500"	3.500"	.305 lb
2180	15	Clear	4.000"	2.250"	1.500"	.750"	3.000"	1.500"	.750"	5/16 SHCS	1/2-13	.531"	1.500"	.750"	4.500"	.921 lb
2180-Black	15	Black	4.000"	2.250"	1.500"	.750"	3.000"	1.500"	.750"	5/16 SHCS	1/2-13	.531"	1.500"	.750"	4.500"	.921 lb
40-2180	40	Clear	106.68mm	60.00mm	40.00mm	20.00mm	80.00mm	40.00mm	20.00mm	M8 SHCS	M12 x 1.75	13.50mm	40.00mm	19.00mm	120.00mm	.4557 kg
40-2180-Black	40	Black	106.68mm	60.00mm	40.00mm	20.00mm	80.00mm	40.00mm	20.00mm	M8 SHCS	M12 x 1.75	13.50mm	40.00mm	19.00mm	120.00mm	.4557 kg

Material Specifications

Material	Alloy	Process	Finish
Aluminum	6005A – T61	Milled	Anodize

Required Machining Services

Machining Type	Machined	Reference Page
Tap Profile End	Mount to Profile End	10-3

Suggested Hardware (Mount to T-Slot)

Part No.	Series	Qty.	Bolt	T-Nut
3491	10	4	1/4-20 x 1/2" SHCS	Economy
3458	15	4	5/16-18 x 7/8" SHCS	Economy
75-3430	40	4	M8 x 20mm SHCS	Economy

Suggested Hardware (Mount to Profile End)

Part No.	Series	Qty.	Bolt
3064	10	4	1/4-20 x 3/4" SHCS
3123	15	4	5/16-18 x 1.25" SHCS
13-8525	40	4	M8 x 25mm SHCS (Blue)

Casters & Feet

Floor Mount Base Plate

- Two upright plates support sides of profile and enable vertical adjustments
- Anchor slots allow frame to bolt to floor and provide lateral adjustments

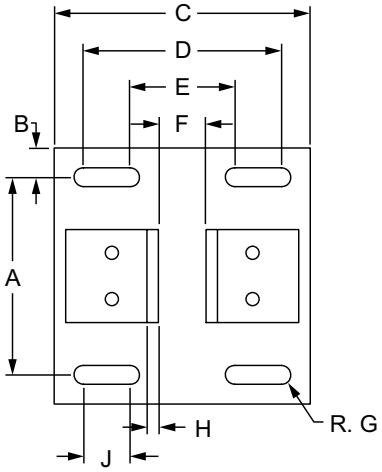

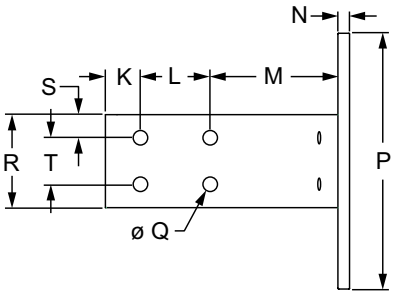

Part No.	Series	Color	A	B	C	D	E	F	G	H	J
2380	10	Clear	2.750"	.625"	5.500"	4.250"	2.250"	1.020"	.203"	.250"	1.000"
2380-Black	10	Black	2.750"	.625"	5.500"	4.250"	2.250"	1.020"	.203"	.250"	1.000"
2385	10	Clear	4.250"	.625"	5.500"	4.250"	2.250"	1.020"	.203"	.250"	1.000"
2385-Black	10	Black	4.250"	.625"	5.500"	4.250"	2.250"	1.020"	.203"	.250"	1.000"
2387	10	Clear	4.250"	.625"	6.500"	5.250"	3.250"	2.020"	.203"	.250"	1.000"
2387-Black	10	Black	4.250"	.625"	6.500"	5.250"	3.250"	2.020"	.203"	.250"	1.000"
2390	15	Clear	3.750"	.625"	6.000"	4.750"	2.750"	1.520"	.265"	.250"	1.000"
2390-Black	15	Black	3.750"	.625"	6.000"	4.750"	2.750"	1.520"	.265"	.250"	1.000"
2400	15	Clear	4.750"	.625"	6.500"	5.250"	3.250"	1.520"	.265"	.250"	1.000"
2400-Black	15	Black	4.750"	.625"	6.500"	5.250"	3.250"	1.520"	.265"	.250"	1.000"
2410	15	Clear	4.750"	.625"	8.000"	6.750"	4.750"	3.020"	.265"	.250"	1.000"
2410-Black	15	Black	4.750"	.625"	8.000"	6.750"	4.750"	3.020"	.265"	.250"	1.000"

		K	L	M	N	P	Q	R	S	T	Weight
2380	10	.750"	1.500"	2.750"	.250"	4.000"	.281"	1.000"	.500"	—	.869 lb
2380-Black	10	.750"	1.500"	2.750"	.250"	4.000"	.281"	1.000"	.500"	—	.869 lb
2385	10	.750"	1.500"	2.750"	.250"	5.500"	.281"	2.000"	.500"	1.000"	1.474 lb
2385-Black	10	.750"	1.500"	2.750"	.250"	5.500"	.281"	2.000"	.500"	1.000"	1.474 lb
2387	10	.750"	1.500"	2.750"	.250"	5.500"	.281"	2.000"	.500"	1.000"	1.606 lb
2387-Black	10	.750"	1.500"	2.750"	.250"	5.500"	.281"	2.000"	.500"	1.000"	1.606 lb
2390	15	.750"	1.500"	2.750"	.375"	5.000"	.328"	1.500"	.750"	—	1.584 lb
2390-Black	15	.750"	1.500"	2.750"	.375"	5.000"	.328"	1.500"	.750"	—	1.584 lb
2400	15	.750"	1.500"	2.750"	.375"	6.000"	.328"	3.000"	.750"	1.500"	2.489 lb
2400-Black	15	.750"	1.500"	2.750"	.375"	6.000"	.328"	3.000"	.750"	1.500"	2.489 lb
2410	15	.750"	1.500"	2.750"	.375"	6.000"	.328"	3.000"	.750"	1.500"	2.822 lb
2410-Black	15	.750"	1.500"	2.750"	.375"	6.000"	.328"	3.000"	.750"	1.500"	2.822 lb

80/20 BUILD YOUR IDEA
More on 80/20® products available at 8020.net

Floor Mount Base Plate (Continued)

Part No.	Series	Color	A	B	C	D	E	F	G	H	J
25-2380	25	Clear	70.00mm	15.00mm	160.00mm	130.00mm	70.00mm	25.20mm	6.50mm	6.00mm	30.00mm
25-2380-Black	25	Black	70.00mm	15.00mm	160.00mm	130.00mm	70.00mm	25.20mm	6.50mm	6.00mm	30.00mm
25-2385	25	Clear	110.00mm	15.00mm	160.00mm	130.00mm	70.00mm	25.20mm	6.50mm	6.00mm	30.00mm
25-2385-Black	25	Black	110.00mm	15.00mm	160.00mm	130.00mm	70.00mm	25.20mm	6.50mm	6.00mm	30.00mm
25-2387	25	Clear	110.00mm	15.00mm	182.00mm	152.00mm	92.00mm	50.40mm	6.50mm	6.00mm	30.00mm
25-2387-Black	25	Black	110.00mm	15.00mm	182.00mm	152.00mm	92.00mm	50.40mm	6.50mm	6.00mm	30.00mm
40-2390	40	Clear	110.00mm	15.00mm	160.00mm	130.00mm	70.00mm	40.40mm	6.75mm	6.00mm	30.00mm
40-2390-Black	40	Black	110.00mm	15.00mm	160.00mm	130.00mm	70.00mm	40.40mm	6.75mm	6.00mm	30.00mm
40-2400	40	Clear	130.00mm	15.00mm	160.00mm	130.00mm	70.00mm	40.40mm	6.75mm	6.00mm	30.00mm
40-2400-Black	40	Black	130.00mm	15.00mm	160.00mm	130.00mm	70.00mm	40.40mm	6.75mm	6.00mm	30.00mm
40-2410	40	Clear	130.00mm	15.00mm	200.00mm	170.00mm	110.00mm	80.40mm	6.75mm	6.00mm	30.00mm
40-2410-Black	40	Black	130.00mm	15.00mm	200.00mm	170.00mm	110.00mm	80.40mm	6.75mm	6.00mm	30.00mm

		K	L	M	N	P	Q	R	S	T	Weight
25-2380	25	20.00mm	40.00mm	80.00mm	6.00mm	100.00mm	7.14mm	25.00mm	12.50mm	—	.4074 kg
25-2380-Black	25	20.00mm	40.00mm	80.00mm	6.00mm	100.00mm	7.14mm	25.00mm	12.50mm	—	.4074 kg
25-2385	25	20.00mm	40.00mm	80.00mm	6.00mm	140.00mm	7.14mm	50.00mm	12.50mm	25.00mm	.6977 kg
25-2385-Black	25	20.00mm	40.00mm	80.00mm	6.00mm	140.00mm	7.14mm	50.00mm	12.50mm	25.00mm	.6977 kg
25-2387	25	20.00mm	40.00mm	80.00mm	6.00mm	140.00mm	7.14mm	50.00mm	12.50mm	25.00mm	.7395 kg
25-2387-Black	25	20.00mm	40.00mm	80.00mm	6.00mm	140.00mm	7.14mm	50.00mm	12.50mm	25.00mm	.7395 kg
40-2390	40	20.00mm	40.00mm	80.00mm	9.00mm	140.00mm	8.33mm	40.00mm	20.00mm	—	.7951 kg
40-2390-Black	40	20.00mm	40.00mm	80.00mm	9.00mm	140.00mm	8.33mm	40.00mm	20.00mm	—	.7951 kg
40-2400	40	20.00mm	40.00mm	80.00mm	9.00mm	160.00mm	8.33mm	80.00mm	20.00mm	40.00mm	1.1653 kg
40-2400-Black	40	20.00mm	40.00mm	80.00mm	9.00mm	160.00mm	8.33mm	80.00mm	20.00mm	40.00mm	1.1653 kg
40-2410	40	20.00mm	40.00mm	80.00mm	9.00mm	160.00mm	8.33mm	80.00mm	20.00mm	40.00mm	1.3245 kg
40-2410-Black	40	20.00mm	40.00mm	80.00mm	9.00mm	160.00mm	8.33mm	80.00mm	20.00mm	40.00mm	1.3245 kg

Material Specifications

Material	Alloy	Process	Finish
Aluminum	6005A – T61	Milled	Anodize

Suggested Hardware (Mount to T-Slot)

Part No.	Series	Qty.	Bolt Assembly
3321	10	4 to 8	1/4-20 x 1/2" FBHSCS & Economy T-Nut
3325	15	4 to 8	5/16-18 x 3/4" Economy T-Slot Stud w/ Washer & Hex Nut
3320	15	4 to 8	5/16-18 x 11/16" FBHSCS & Economy T-Nut
75-3412	25	4 to 8	M6 x 12mm SHCS & Economy T-Nut
75-3500	40	4 to 8	M8 x 20mm Economy T-Slot Stud w/ Washer & Hex Nut
75-3422	40	4 to 8	M8 x 16mm BHSCS & Economy T-Nut

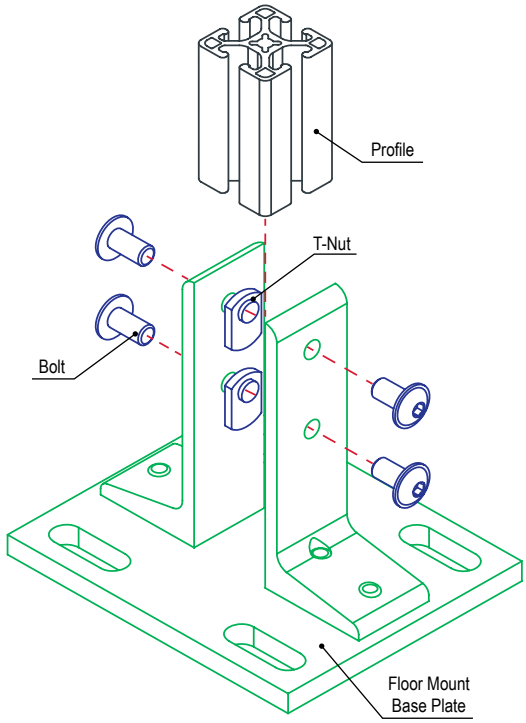

Casters & Feet

Economy Floor Mount Base Plate

- Bolts directly to T-slot to allow vertical adjustments
- Counterbored holes incorporate floor anchors

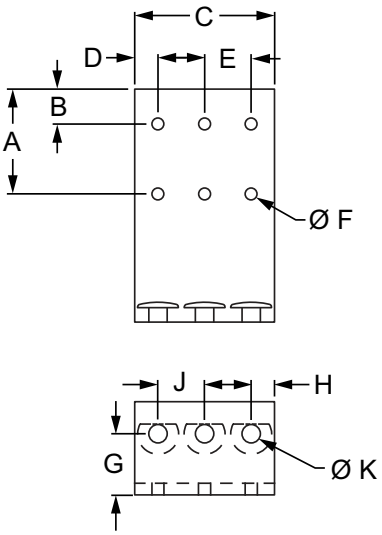

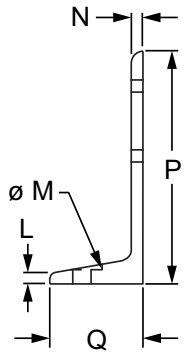

Part No.	Series	Color	A	B	C	D	E	F	G	H
2414	10	Clear	2.250"	.750"	1.000"	.500"	—	.257"	1.312"	.500"
2414-Black	10	Black	2.250"	.750"	1.000"	.500"	—	.257"	1.312"	.500"
2416	10	Clear	2.250"	.750"	2.000"	.500"	1.000"	.257"	1.312"	.500"
2416-Black	10	Black	2.250"	.750"	2.000"	.500"	1.000"	.257"	1.312"	.500"
2404	10	Clear	2.250"	.750"	3.000"	.500"	1.000"	.257"	1.312"	.500"
2404-Black	10	Black	2.250"	.750"	3.000"	.500"	1.000"	.257"	1.312"	.500"
2415	15	Clear	2.250"	.750"	1.500"	.750"	—	.328"	1.312"	.750"
2415-Black	15	Black	2.250"	.750"	1.500"	.750"	—	.328"	1.312"	.750"
2417	15	Clear	2.250"	.750"	3.000"	.750"	1.500"	.328"	1.312"	.750"
2417-Black	15	Black	2.250"	.750"	3.000"	.750"	1.500"	.328"	1.312"	.750"
2405	15	Clear	2.250"	.750"	4.500"	.750"	1.500"	.328"	1.312"	.750"
2405-Black	15	Black	2.250"	.750"	4.500"	.750"	1.500"	.328"	1.312"	.750"

			J	K	L	M	N	P	Q	Weight
2414	10	Clear	—	.390"	.312"	.875"	.250"	5.000"	2.000"	.178 lb
2414-Black	10	Black	—	.390"	.312"	.875"	.250"	5.000"	2.000"	.178 lb
2416	10	Clear	1.000"	.390"	.312"	.875"	.250"	5.000"	2.000"	.270 lb
2416-Black	10	Black	1.000"	.390"	.312"	.875"	.250"	5.000"	2.000"	.270 lb
2404	10	Clear	1.000"	.390"	.312"	.875"	.250"	5.000"	2.000"	.545 lb
2404-Black	10	Black	1.000"	.390"	.312"	.875"	.250"	5.000"	2.000"	.545 lb
2415	15	Clear	—	.531"	.312"	1.125"	.250"	5.000"	2.000"	.263 lb
2415-Black	15	Black	—	.531"	.312"	1.125"	.250"	5.000"	2.000"	.263 lb
2417	15	Clear	1.500"	.531"	.312"	1.125"	.250"	5.000"	2.000"	.545 lb
2417-Black	15	Black	1.500"	.531"	.312"	1.125"	.250"	5.000"	2.000"	.545 lb
2405	15	Clear	1.500"	.531"	.312"	1.125"	.250"	5.000"	2.000"	.785 lb
2405-Black	15	Black	1.500"	.531"	.312"	1.125"	.250"	5.000"	2.000"	.785 lb

80/20 BUILD YOUR IDEA
More on 80/20® products available at 8020.net

Economy Floor Mount Base Plate (Continued)

Part No.	Series	Color	A	B	C	D	E	F	G	H
25-2414	25	Clear	60.00mm	20.00mm	25.00mm	12.50mm	—	6.30mm	36.00mm	12.50mm
25-2414-Black	25	Black	60.00mm	20.00mm	25.00mm	12.50mm	—	6.30mm	36.00mm	12.50mm
25-2416	25	Clear	60.00mm	20.00mm	50.00mm	12.50mm	25.00mm	6.30mm	36.00mm	12.50mm
25-2416-Black	25	Black	60.00mm	20.00mm	50.00mm	12.50mm	25.00mm	6.30mm	36.00mm	12.50mm
40-2415	40	Clear	60.00mm	20.00mm	40.00mm	20.00mm	—	8.33mm	36.00mm	20.00mm
40-2415-Black	40	Black	60.00mm	20.00mm	40.00mm	20.00mm	—	8.33mm	36.00mm	20.00mm
40-2417	40	Clear	60.00mm	20.00mm	80.00mm	20.00mm	40.00mm	8.33mm	36.00mm	20.00mm
40-2417-Black	40	Black	60.00mm	20.00mm	80.00mm	20.00mm	40.00mm	8.33mm	36.00mm	20.00mm

			J	K	L	M	N	P	Q	Weight
25-2414	25	Clear	—	10.49mm	8.00mm	22.00mm	6.00mm	140.00mm	50.00mm	.0846 kg
25-2414-Black	25	Black	—	10.49mm	8.00mm	22.00mm	6.00mm	140.00mm	50.00mm	.0846 kg
25-2416	25	Clear	25.00mm	10.49mm	8.00mm	22.00mm	6.00mm	140.00mm	56.00mm	.1679 kg
25-2416-Black	25	Black	25.00mm	10.49mm	8.00mm	22.00mm	6.00mm	140.00mm	56.00mm	.1679 kg
40-2415	40	Clear	—	13.49mm	8.00mm	28.00mm	6.00mm	140.00mm	56.00mm	.1406 kg
40-2415-Black	40	Black	—	13.49mm	8.00mm	28.00mm	6.00mm	140.00mm	56.00mm	.1406 kg
40-2417	40	Clear	40.00mm	13.49mm	8.00mm	28.00mm	6.00mm	140.00mm	56.00mm	.2680 kg
40-2417-Black	40	Black	40.00mm	13.49mm	8.00mm	28.00mm	6.00mm	140.00mm	56.00mm	.2680 kg

Material Specifications

Material	Alloy	Process	Finish
Aluminum	6005A – T61	Milled	Anodize

Suggested Hardware (Mount to T-Slot)

Part No.	Series	Qty.	Bolt Assembly
3321	10	2 to 6	1/4-20 x 1/2" FBHSCS & Economy T-Nut
3325	15	2 to 6	5/16-18 x 3/4" Economy T-Slot Stud w/ Washer & Hex Nut
3320	15	2 to 6	5/16-18 x 11/16" FBHSCS & Economy T-Nut
75-3412	25	2 to 6	M6 x 12mm SHCS & Economy T-Nut
75-3500	40	2 to 6	M8 x 20mm Economy T-Slot Stud w/ Washer & Hex Nut
75-3422	40	2 to 6	M8 x 16mm BHSCS & Economy T-Nut

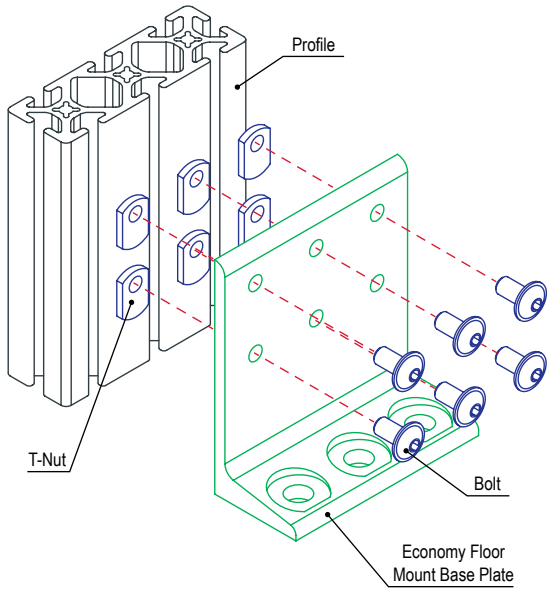

Casters & Feet

Slotted Economy Floor Mount Base Plate

- Slotted holes assist with positioning and adjustments
- Counterbored holes incorporate floor anchors

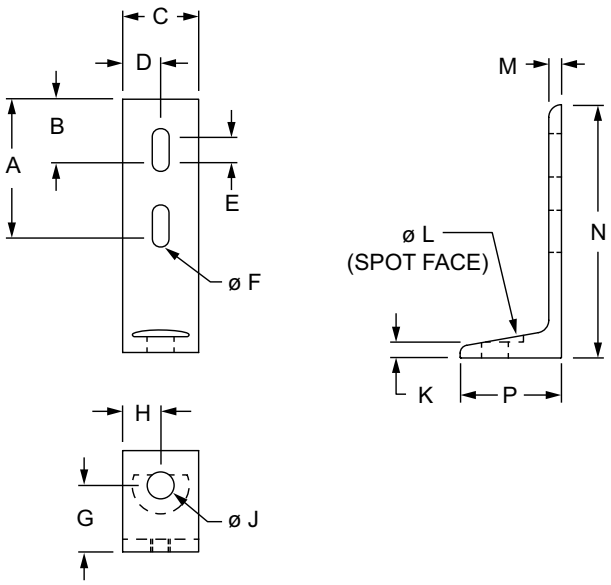

Part No.	Series	Color	A	B	C	D	E	F	G
2413	15 RT	Clear	2.750"	1.250"	1.500"	.750"	.500"	.328"	1.312"
2413-Black	15 RT	Black	2.750"	1.250"	1.500"	.750"	.500"	.328"	1.312"

Part No.	Series	H	J	K	L	M	N	P	Weight
2413	15 RT	.750"	.530"	.312"	1.125"	.250"	5.000"	2.000"	.255 lb
2413-Black	15 RT	.750"	.530"	.312"	1.125"	.250"	5.000"	2.000"	.255 lb

Material Specifications

Material	Alloy	Process	Finish
Aluminum	6005A – T61	Milled	Anodize

Suggested Hardware (Mount to T-Slot)

Part No.	Series	Qty.	Bolt Assembly	T-Nut
3320	15	2	5/16-18 x .687" FBHSCS	Economy
3960	RT	2	5/16-18 x 2.000" Flanged Hex Head Bolt	Flanged Hex Nut

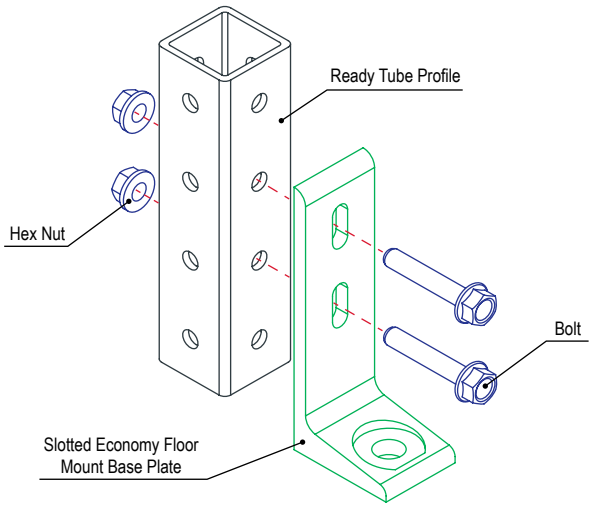

80/20 BUILD YOUR IDEA
More on 80/20® products
available at 8020.net

Linear Bearing Concept

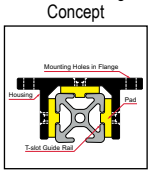

Page 6-3

Bearing Pad Types

Page 6-3

UniBearings™

Page 6-4

Introduction to Axial Motion

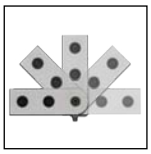

Page 6-5

Dynamic Pivot Components

Page 6-5

Bearings

3 Slot Mount - Single Flange Short Standard Linear Bearing

Page 6-6

3 Slot Mount - Single Flange Long Standard Linear Bearing

Page 6-8

3 Slot Mount - Double Flange Short Standard Linear Bearing

Page 6-10

3 Slot Mount - Double Flange Long Standard Linear Bearing

Page 6-12

4 Slot Mount - Double Flange Short Standard Linear Bearing

Page 6-14

4 Slot Mount - Double Flange Long Standard Linear Bearing

Page 6-16

3 Slot Mount - Single Flange Short High-Cycle Linear Bearing

Page 6-18

3 Slot Mount - Single Flange Long High-Cycle Linear Bearing

Page 6-20

3 Slot Mount - Double Flange Short High-Cycle Linear Bearing

Page 6-22

3 Slot Mount - Double Flange Long High-Cycle Linear Bearing

Page 6-24

4 Slot Mount - Double Flange Short High-Cycle Linear Bearing

Page 6-26

4 Slot Mount - Double Flange Long High-Cycle Linear Bearing

Page 6-28

Single Short UniBearing™

Page 6-30

Single Long UniBearing™

Page 6-31

Double Short UniBearing™

Page 6-32

Double Long UniBearing™

Page 6-33

Short - Single Mount Unibearing™ Assy.

Page 6-34

Long - Single Mount Unibearing™ Assy.

Page 6-35

Short - Double Mount Unibearing™ Assy.

Page 6-36

Long - Double Mount Unibearing™ Assy.

Page 6-37

Single-Keyed Standard Linear Bearing Pad

Page 6-42

Single-Keyed High-Cycle Linear Bearing Pad

Page 6-43

T-Slot Insert Linear Bearing Pad

Page 6-44

Single-Keyed UniBearing™ Pad

Page 6-45

Double-Keyed UniBearing™ Pad

Page 6-46

Single-Keyed Standard Bearing Pad Profile

Page 6-47

Double-Keyed Standard Bearing Pad Profile

Page 6-48

Linear Bearing Shim Stock

Page 6-49

"L" Handle Linear Bearing Brake Kit

Page 6-50

"T" Handle Linear Bearing Brake Kit

Page 6-51

Star Handle Linear Bearing Brake Kit

Page 6-51

Hex Nut Linear Bearing Brake Kit

Page 6-52

Wing Nut Linear Bearing Brake Kit

Page 6-52

Bearings & Pivots

Pivots

0 Degree Dynamic Pivot Nub

Page 6-53

90 Degree Dynamic Pivot Nub

Page 6-54

Universal Dynamic Pivot Nub

Page 6-55

0 Degree Dynamic Right Angle Pivot Nub

Page 6-56

90 Degree Dynamic Right Angle Pivot Nub

Page 6-57

Universal Dynamic Right Angle Pivot Nub

Page 6-58

"L" Dynamic Pivot Arm

Page 6-59

Standard Straight Dynamic Pivot Arm

Page 6-60

Standard 0 Degree Dynamic Pivot Assy. with Dual Straight Arms

Page 6-61

Standard 90 Degree Dynamic Pivot Assy. with Dual Straight Arms

Page 6-62

Standard Universal Dynamic Pivot Assy. with Dual Straight Arms

Page 6-63

Standard 0 Degree Dynamic Pivot Assy. with Dual "L" Arms

Page 6-64

Standard 90 Degree Dynamic Pivot Assy. with Dual "L" Arms

Page 6-65

Standard Universal Dynamic Pivot Assy. with Dual "L" Arms

Page 6-66

Standard 0 Degree Dynamic Pivot Assy. with Straight and "L" Arm

Page 6-67

Standard 90 Degree Dynamic Pivot Assy. with Straight and "L" Arm

Page 6-68

Standard Universal Dynamic Pivot Assy. with Straight and "L" Arm

Page 6-69

Right Angle 0 Degree Dynamic Pivot Assy. with Dual Straight Arms

Page 6-70

Right Angle 90 Degree Dynamic Pivot Assy. with Dual Straight Arms

Page 6-71

Right Angle Universal Dynamic Pivot Assy. with Dual Straight Arms

Page 6-72

Right Angle 0 Degree Dynamic Pivot Assy. with Dual "L" Arms

Page 6-73

Right Angle 90 Degree Dynamic Pivot Assy. with Dual "L" Arms

Page 6-74

Right Angle Universal Dynamic Pivot Assy. with Dual "L" Arms

Page 6-75

90 Degree Left Hand Pivot Bracket Plate

Page 6-76

90 Degree Right Hand Pivot Bracket Plate

Page 6-77

90 Degree Left Hand Pivot Bracket Assy. with "L" Handle

Page 6-78

90 Degree Left Hand Pivot Bracket Assy. with "T" Handle

Page 6-79

90 Degree Right Hand Pivot Bracket Assy. with "L" Handle

Page 6-80

90 Degree Right Hand Pivot Bracket Assy. with "T" Handle

Page 6-81

90 Degree Double Pivot Bracket Assy. with "L" Handles

Page 6-82

90 Degree Double Pivot Bracket Assy. with "T" Handles

Page 6-83

90 Degree Wide Double Pivot Bracket Assy. with "L" Handles

Page 6-84

90 Degree Wide Double Pivot Bracket Assy. with "T" Handles

Page 6-85

180 Degree Pivot Bracket

Page 6-86

180 Degree Right Hand Pivot Bracket Assy. with "L" Handle

Page 6-87

180 Degree Double Pivot Bracket Assy. with "L" Handles

Page 6-88

180 Degree Wide Double Pivot Bracket Assy. with "L" Handles

Page 6-89

"L" Handle Kit - Dynamic Pivot

Page 6-90

"T" Handle Kit - Dynamic Pivot

Page 6-90

Linear Bearing Concept

Linear bearings enable you to add repeated motion and movement to your project. As an example, linear bearings are commonly found in material transportation applications such as picking tools.

The core concept is that profiles act as guiderails and pads are inserted into the T-slot to enable movement. Pads are available in two options: standard or high-cycle.

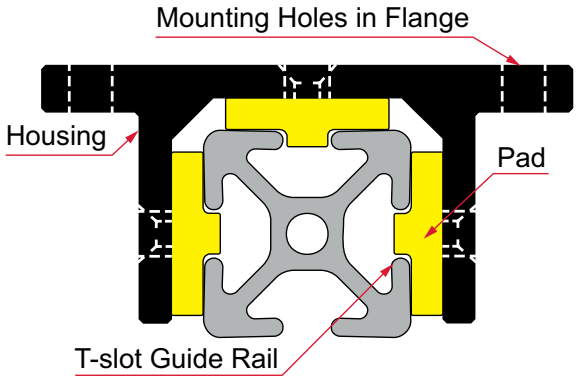

Standard Pad

Perfect for solutions such as drawer glides, table saw fences, ergonomic workstations or adjustable stands. All pads are available in white and black styles.

High-Cycle Pad

These bearings have a special threaded insert designed for sudden acceleration and deceleration without deteriorating. This durable pad lends itself to actuators and parts-transfer equipment.

Linear Bearing Shims

Linear bearing shim stock is used to create a precise fit. Each shim is .005 inches (.127mm) thick and has a slotted design that enables easy installation without having to dismantle the bearing; simply loosen the bearing pad and slide the shim(s) between the pad and housing while the bearing is still in place. Shims are sold in packs of 10 and are compatible with all 80/20 bearings.

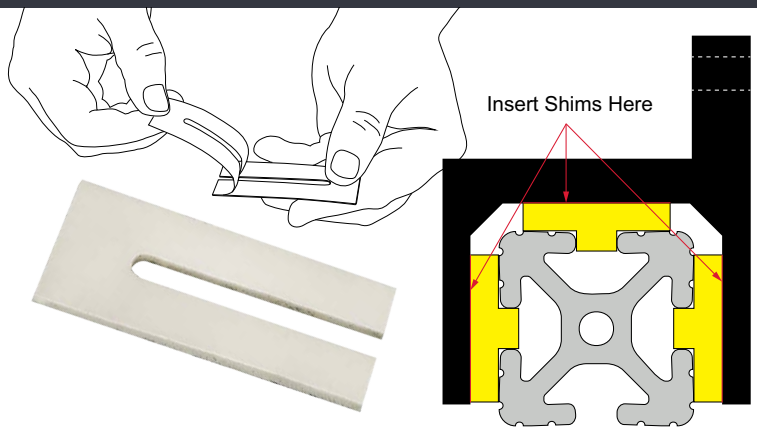

Bearings & Pivots

UniBearing™ Concept

80/20 offers a custom UniBearing™. It differs from the traditional linear bearing in that it is adjustable for a range of profiles and can be installed even when a T-slot profile is captivated.

These are easily integrated into existing structures and are commonly used in applications such as automation equipment or guards that require frequent movement.

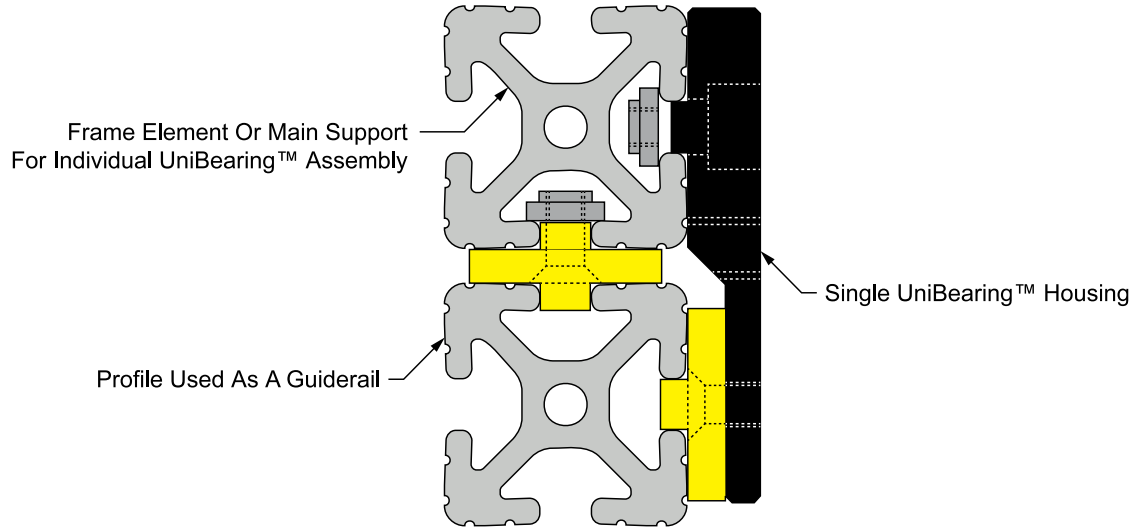

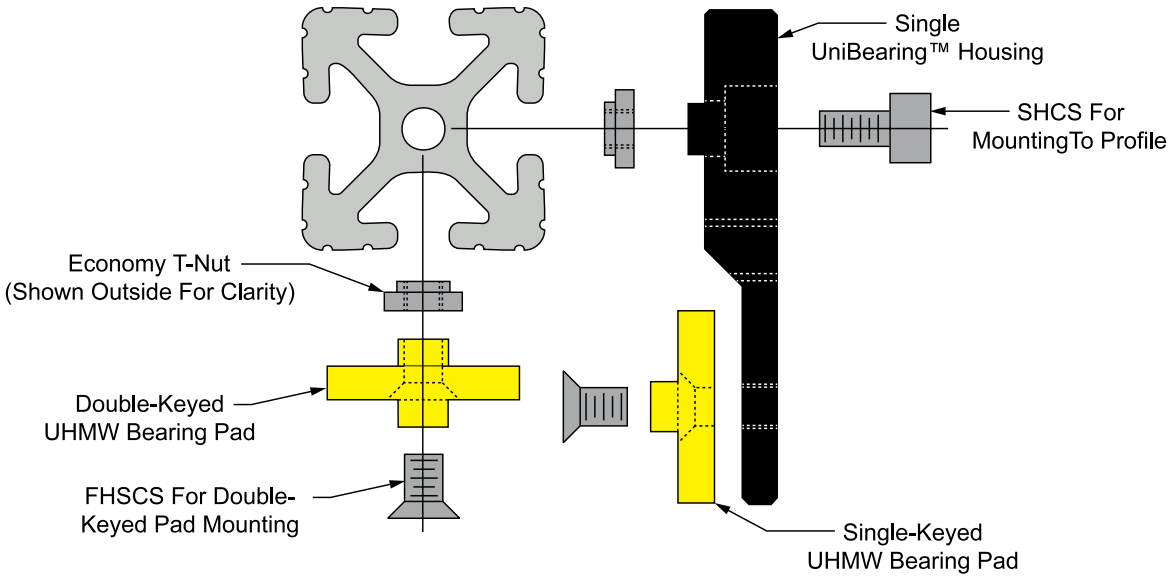

80/20 BUILD YOUR IDEA
More on 80/20® products available at 8020.net

Axial Motion: 0° to 180°

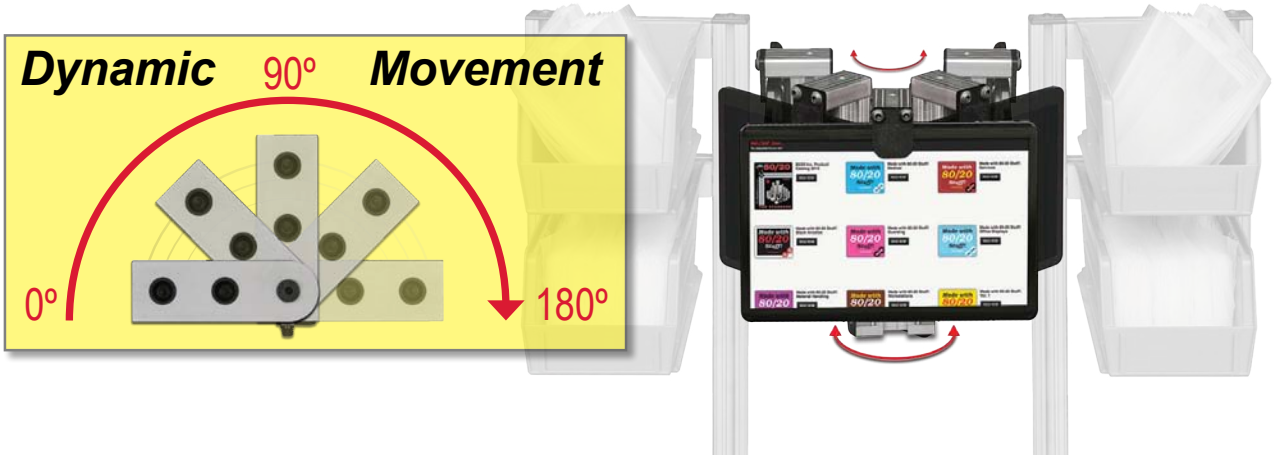

Dynamic pivots are typically used to create axial motion ranging from 0-180 degrees. There are also assemblies available to limit the range of motion from 0-90 degrees. You'll commonly find dynamic pivots in tooling arms, displays and computer stands.

Dynamic Pivots Components

Dynamic pivot assemblies include a pivot nub and connect to the profile using either "L" arms, straight arms, or brackets. These arms have permanently lubricated bronze bushings that act as a high-strength pivot point and reduce maintenance time and cost.

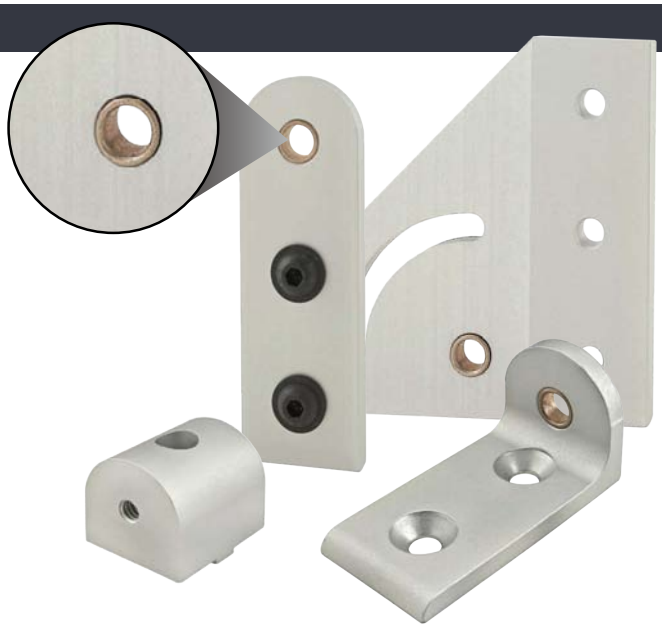

All dynamic arms and brackets come with permanently lubricated bronze bushings for long-lasting and repeated movement.

If you will be repositioning your dynamic pivot frequently, consider adding a handle to help simplify and speed up the process. Dynamic pivots are long-lasting and there are a variety of assembly combinations available that allow you to fold or rotate the profiles to fit your specific needs.

Bearings & Pivots

3 Slot Mount - Single Flange Short Standard Linear Bearing

- Available with or without brake holes
- Includes pads, screws and shims; pads are self lubricating UHMW
- Designed for compression loads only; not intended for hanging loads

Fractional

Metric

Black Anodized

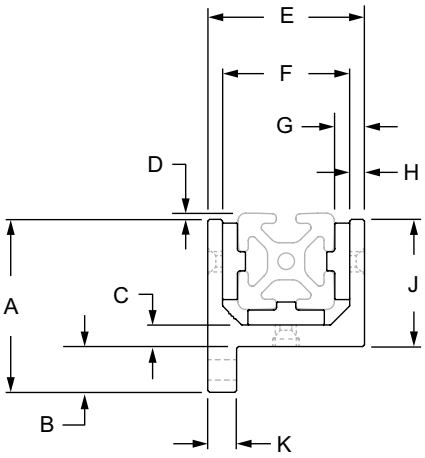

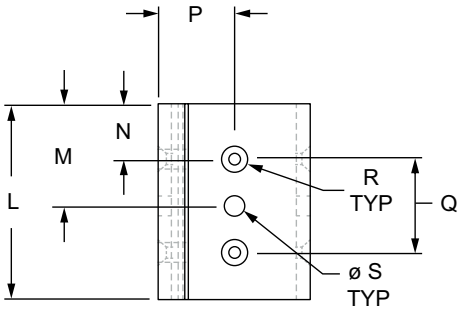

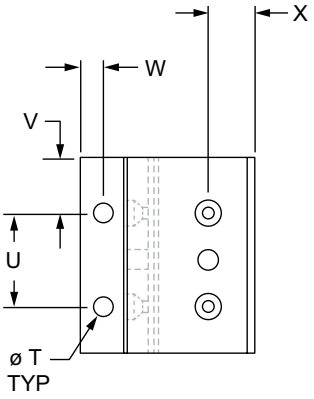

80/20 BUILD YOUR IDEA
More on 80/20® products available at 8020.net

3 Slot Mount - Single Flange Short Standard Linear Bearing (Continued)

3 Slot Mount - Single Flange Short Standard Linear Bearing

Part No.	Series	Color	A	B	C	D	E	F	G	H	J	K	L
6715	10	Clear	1.968"	.656"	.250"	.094"	1.624"	1.312"	.306"	.156"	1.312"	.311"	1.875"
6715-Black	10	Black	1.968"	.656"	.250"	.094"	1.624"	1.312"	.306"	.156"	1.312"	.311"	1.875"
6815	15	Clear	2.750"	.750"	.375"	.125"	2.505"	2.005"	.493"	.250"	2.000"	.500"	2.812"
6815-Black	15	Black	2.750"	.750"	.375"	.125"	2.505"	2.005"	.493"	.250"	2.000"	.500"	2.812"
25-6715	25	Clear	49.73mm	16.48mm	5.99mm	1.80mm	41.12mm	33.15mm	7.80mm	3.99mm	33.25mm	7.98mm	47.00mm
25-6715-Black	25	Black	49.73mm	16.48mm	5.99mm	1.80mm	41.12mm	33.15mm	7.80mm	3.99mm	33.25mm	7.98mm	47.00mm
40-6815	40	Clear	71.83mm	19.00mm	8.99mm	2.58mm	65.13mm	52.83mm	12.32mm	6.15mm	52.83mm	11.99mm	75.00mm
40-6815-Black	40	Black	71.83mm	19.00mm	8.99mm	2.58mm	65.13mm	52.83mm	12.32mm	6.15mm	52.83mm	11.99mm	75.00mm

		M	N	P	Q	R	S	T	U	V	W	X	Weight
6715	10	—	.438"	.812"	1.000"	#8 FHS	—	.257"	1.000"	.438"	.343"	.406"	.198 lb
6715-Black	10		.438"	.812"	1.000"	#8 FHS		.257"	1.000"	.438"	.343"	.406"	.198 lb
6815	15		.656"	1.253"	1.500"	#10 FHS		.328"	1.500"	.656"	.375"	.625"	.688 lb
6815-Black	15		.656"	1.253"	1.500"	#10 FHS		.328"	1.500"	.656"	.375"	.625"	.688 lb
25-6715	25		11.00mm	20.56mm	25.00mm	#8 FHS		6.30mm	25.00mm	11.00mm	8.23mm	10.69mm	.0866 kg
25-6715-Black	25		11.00mm	20.56mm	25.00mm	#8 FHS		6.30mm	25.00mm	11.00mm	8.23mm	10.69mm	.0866 kg
40-6815	40		17.50mm	32.56mm	40.00mm	#10 FHS		8.33mm	40.00mm	17.50mm	9.53mm	17.42mm	.3262 kg
40-6815-Black	40		17.50mm	32.56mm	40.00mm	#10 FHS		8.33mm	40.00mm	17.50mm	9.53mm	17.42mm	.3262 kg

3 Slot Mount - Single Flange Short Standard Linear Bearing with Brake Holes

Part No.	Series	Color	A	B	C	D	E	F	G	H	J	K	L
6415	10	Clear	1.968"	.656"	.250"	.094"	1.624"	1.312"	.306"	.156"	1.312"	.311"	1.875"
6415-Black	10	Black	1.968"	.656"	.250"	.094"	1.624"	1.312"	.306"	.156"	1.312"	.311"	1.875"
6515	15	Clear	2.750"	.750"	.375"	.125"	2.505"	2.005"	.493"	.250"	2.000"	.500"	2.812"
6515-Black	15	Black	2.750"	.750"	.375"	.125"	2.505"	2.005"	.493"	.250"	2.000"	.500"	2.812"
25-6415	25	Clear	49.73mm	16.48mm	5.99mm	1.80mm	41.12mm	33.15mm	7.80mm	3.99mm	33.25mm	7.98mm	47.00mm
25-6415-Black	25	Black	49.73mm	16.48mm	5.99mm	1.80mm	41.12mm	33.15mm	7.80mm	3.99mm	33.25mm	7.98mm	47.00mm
40-6515	40	Clear	71.83mm	19.00mm	8.99mm	2.58mm	65.13mm	52.83mm	12.32mm	6.15mm	52.83mm	11.99mm	75.00mm
40-6515-Black	40	Black	71.83mm	19.00mm	8.99mm	2.58mm	65.13mm	52.83mm	12.32mm	6.15mm	52.83mm	11.99mm	75.00mm

		M	N	P	Q	R	S	T	U	V	W	X	Weight
6415	10	.938"	.438"	.812"	1.000"	#8 FHS	.265"	.257"	1.000"	.438"	.343"	.406"	.196 lb
6415-Black	10	.938"	.438"	.812"	1.000"	#8 FHS	.265"	.257"	1.000"	.438"	.343"	.406"	.196 lb
6515	15	1.406"	.656"	1.253"	1.500"	#10 FHS	.344"	.328"	1.500"	.656"	.375"	.625"	.679 lb
6515-Black	15	1.406"	.656"	1.253"	1.500"	#10 FHS	.344"	.328"	1.500"	.656"	.375"	.625"	.679 lb
25-6415	25	23.50mm	11.00mm	20.56mm	25.00mm	#8 FHS	6.53mm	6.30mm	25.00mm	11.00mm	8.23mm	10.69mm	.0857 kg
25-6415-Black	25	23.50mm	11.00mm	20.56mm	25.00mm	#8 FHS	6.53mm	6.30mm	25.00mm	11.00mm	8.23mm	10.69mm	.0857 kg
40-6515	40	37.50mm	17.50mm	32.56mm	40.00mm	#10 FHS	8.71mm	8.33mm	40.00mm	17.50mm	9.53mm	17.42mm	.3253 kg
40-6515-Black	40	37.50mm	17.50mm	32.56mm	40.00mm	#10 FHS	8.71mm	8.33mm	40.00mm	17.50mm	9.53mm	17.42mm	.3253 kg

Material Specifications

Material	Alloy*	Process	Finish
Aluminum	6005A – T61	Extrude	Anodize

* Or comparable

Bearings & Pivots

3 Slot Mount - Single Flange Long Standard Linear Bearing

- Available with or without brake holes
- Includes pads, screws and shims; pads are self lubricating UHMW
- Designed for compression loads only; not intended for hanging loads

Fractional

Metric

Black Anodized

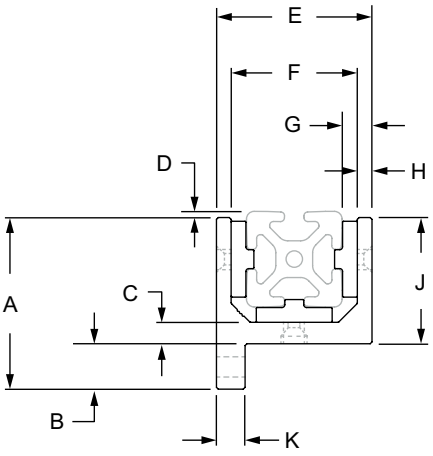

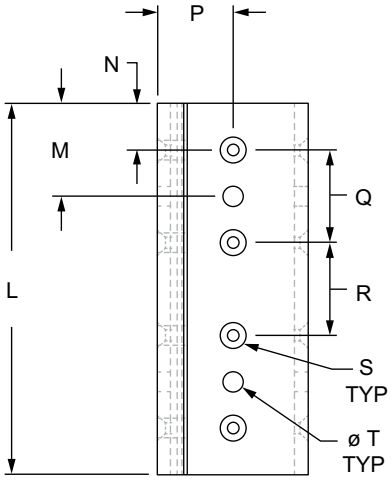

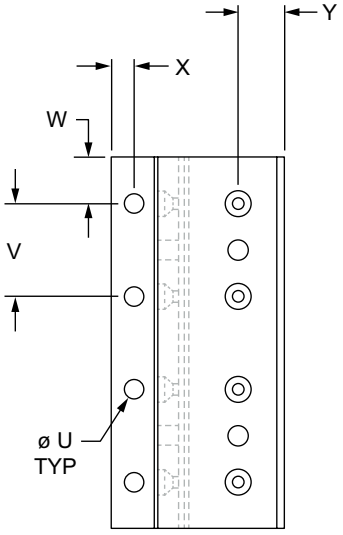

80/20 BUILD YOUR IDEA
More on 80/20® products available at 8020.net

3 Slot Mount - Single Flange Long Standard Linear Bearing (Continued)

3 Slot Mount - Single Flange Long Standard Linear Bearing

Part No.	Series	Color	A	B	C	D	E	F	G	H	J	K	L	M
6716	10	Clear	1.968"	.656"	.250"	.094"	1.624"	1.312"	.306"	.156"	1.312"	.311"	4.000"	—
6716-Black	10	Black	1.968"	.656"	.250"	.094"	1.624"	1.312"	.306"	.156"	1.312"	.311"	4.000"	
6816	15	Clear	2.750"	.750"	.375"	.125"	2.505"	2.005"	.493"	.250"	2.000"	.500"	6.000"	
6816-Black	15	Black	2.750"	.750"	.375"	.125"	2.505"	2.005"	.493"	.250"	2.000"	.500"	6.000"	
25-6716	25	Clear	49.73mm	16.48mm	5.99mm	1.80mm	41.12mm	33.15mm	7.80mm	3.99mm	33.25mm	7.98mm	100.00mm	
25-6716-Black	25	Black	49.73mm	16.48mm	5.99mm	1.80mm	41.12mm	33.15mm	7.80mm	3.99mm	33.25mm	7.98mm	100.00mm	
40-6816	40	Clear	71.83mm	19.00mm	8.99mm	2.58mm	65.13mm	52.83mm	12.32mm	6.15mm	52.83mm	11.99mm	160.00mm	
40-6816-Black	40	Black	71.83mm	19.00mm	8.99mm	2.58mm	65.13mm	52.83mm	12.32mm	6.15mm	52.83mm	11.99mm	160.00mm	

Part No.	Series	Color	N	P	Q	R	S	T	U	V	W	X	Y	Weight
6716	10	Clear	.500"	.812"	1.000"	1.000"	#8 FHS	—	.257"	1.000"	.500"	.343"	.406"	.417 lb
6716-Black	10	Black	.500"	.812"	1.000"	1.000"	#8 FHS		.257"	1.000"	.500"	.343"	.406"	.417 lb
6816	15	Clear	.750"	1.253"	1.500"	1.500"	#10 FHS		.328"	1.500"	.656"	.375"	.625"	1.461 lb
6816-Black	15	Black	.750"	1.253"	1.500"	1.500"	#10 FHS		.328"	1.500"	.656"	.375"	.625"	1.461 lb
25-6716	25	Clear	12.50mm	20.56mm	25.00mm	25.00mm	#8 FHS		6.30mm	25.00mm	12.50mm	8.23mm	10.69mm	.190 kg
25-6716-Black	25	Black	12.50mm	20.56mm	25.00mm	25.00mm	#8 FHS		6.30mm	25.00mm	12.50mm	8.23mm	10.69mm	.190 kg
40-6816	40	Clear	20.00mm	32.56mm	40.00mm	40.00mm	#10 FHS		8.33mm	40.00mm	20.00mm	9.53mm	17.42mm	.703 kg
40-6816-Black	40	Black	20.00mm	32.56mm	40.00mm	40.00mm	#10 FHS		8.33mm	40.00mm	20.00mm	9.53mm	17.42mm	.703 kg

3 Slot Mount - Single Flange Long Standard Linear Bearing with Brake Holes

Part No.	Series	Color	A	B	C	D	E	F	G	H	J	K	L	M
6716	10	Clear	1.968"	.656"	.250"	.094"	1.624"	1.312"	.306"	.156"	1.312"	.311"	4.000"	1.000"
6716-Black	10	Black	1.968"	.656"	.250"	.094"	1.624"	1.312"	.306"	.156"	1.312"	.311"	4.000"	1.000"
6816	15	Clear	2.750"	.750"	.375"	.125"	2.505"	2.005"	.493"	.250"	2.000"	.500"	6.000"	1.500"
6816-Black	15	Black	2.750"	.750"	.375"	.125"	2.505"	2.005"	.493"	.250"	2.000"	.500"	6.000"	1.500"
25-6716	25	Clear	49.73mm	16.48mm	5.99mm	1.80mm	41.12mm	33.15mm	7.80mm	3.99mm	33.25mm	7.98mm	100.00mm	25.00mm
25-6716-Black	25	Black	49.73mm	16.48mm	5.99mm	1.80mm	41.12mm	33.15mm	7.80mm	3.99mm	33.25mm	7.98mm	100.00mm	25.00mm
40-6816	40	Clear	71.83mm	19.00mm	8.99mm	2.58mm	65.13mm	52.83mm	12.32mm	6.15mm	52.83mm	11.99mm	160.00mm	40.00mm
40-6816-Black	40	Black	71.83mm	19.00mm	8.99mm	2.58mm	65.13mm	52.83mm	12.32mm	6.15mm	52.83mm	11.99mm	160.00mm	40.00mm

Part No.	Series	Color	N	P	Q	R	S	T	U	V	W	X	Y	Weight
6416	10	Clear	.500"	.812"	1.000"	1.000"	#8 FHS	.265"	.257"	1.000"	.500"	.343"	.406"	.414 lb
6416-Black	10	Black	.500"	.812"	1.000"	1.000"	#8 FHS	.265"	.257"	1.000"	.500"	.343"	.406"	.414 lb
6516	15	Clear	.750"	1.253"	1.500"	1.500"	#10 FHS	.344"	.328"	1.500"	.656"	.375"	.625"	1.443 lb
6516-Black	15	Black	.750"	1.253"	1.500"	1.500"	#10 FHS	.344"	.328"	1.500"	.656"	.375"	.625"	1.443 lb
25-6416	25	Clear	12.50mm	20.56mm	25.00mm	25.00mm	#8 FHS	6.53mm	6.30mm	25.00mm	12.50mm	8.23mm	10.69mm	.190 kg
25-6416-Black	25	Black	12.50mm	20.56mm	25.00mm	25.00mm	#8 FHS	6.53mm	6.30mm	25.00mm	12.50mm	8.23mm	10.69mm	.190 kg
40-6516	40	Clear	20.00mm	32.56mm	40.00mm	40.00mm	#10 FHS	8.71mm	8.33mm	40.00mm	20.00mm	9.53mm	17.42mm	.695 kg
40-6516-Black	40	Black	20.00mm	32.56mm	40.00mm	40.00mm	#10 FHS	8.71mm	8.33mm	40.00mm	20.00mm	9.53mm	17.42mm	.695 kg

Material Specifications

Material	Alloy*	Process	Finish
Aluminum	6005A – T61	Extrude	Anodize

* Or comparable

Bearings & Pivots

3 Slot Mount - Double Flange Short Standard Linear Bearing

- Available with or without brake holes
- Includes pads, screws and shims; pads are self lubricating UHMW
- Designed for compression loads only; not intended for hanging loads

Fractional

Metric

Black Anodized

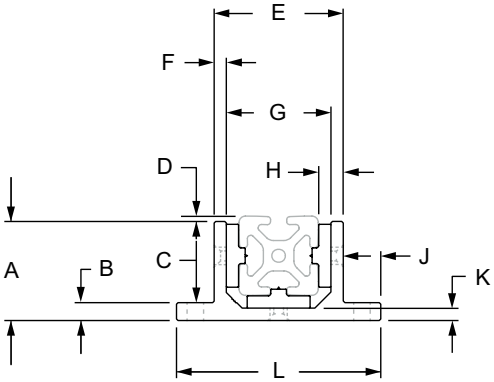

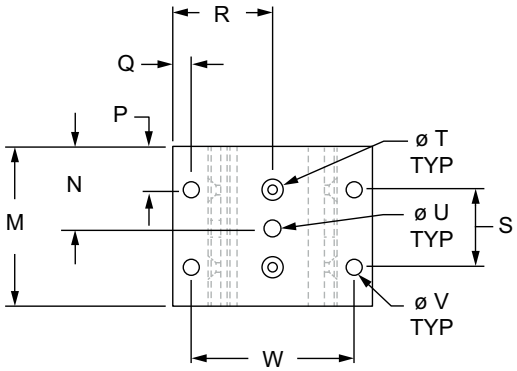

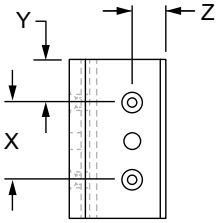

80/20 BUILD YOUR IDEA
More on 80/20® products available at 8020.net

3 Slot Mount - Double Flange Short Standard Linear Bearing (Continued)

3 Slot Mount - Double Flange Short Standard Linear Bearing

Part No.	Series	Color	A	B	C	D	E	F	G	H	J	K	L	M
6725	10	Clear	1.218"	.312"	.906"	.094"	1.624"	.156"	1.312"	.306"	.656"	.156"	2.936"	1.875"
6725-Black	10	Black	1.218"	.312"	.906"	.094"	1.624"	.156"	1.312"	.306"	.656"	.156"	2.936"	1.875"
6825	15	Clear	1.875"	.375"	1.500"	.125"	2.505"	.250"	2.005"	.493"	.748"	.250"	4.000"	2.812"
6825-Black	15	Black	1.875"	.375"	1.500"	.125"	2.505"	.250"	2.005"	.493"	.748"	.250"	4.000"	2.812"
25-6725	25	Clear	31.20mm	8.00mm	23.20mm	1.80mm	41.15mm	4.00mm	33.15mm	7.80mm	16.47mm	4.00mm	74.09mm	47.00mm
25-6725-Black	25	Black	31.20mm	8.00mm	23.20mm	1.80mm	41.15mm	4.00mm	33.15mm	7.80mm	16.47mm	4.00mm	74.09mm	47.00mm
40-6825	40	Clear	50.00mm	9.00mm	41.00mm	2.58mm	65.12mm	6.15mm	52.82mm	12.32mm	19.00mm	6.15mm	103.12mm	75.00mm
40-6825-Black	40	Black	50.00mm	9.00mm	41.00mm	2.58mm	65.12mm	6.15mm	52.82mm	12.32mm	19.00mm	6.15mm	103.12mm	75.00mm

Part No.	Series	N	P	Q	R	S	T	U	V	W	X	Y	Z	Weight
6725	10	—	.438"	.343"	1.468"	1.000"	#8 FHS	—	.257"	2.250"	1.000"	.438"	.406"	.207 lb
6725-Black	10		.438"	.343"	1.468"	1.000"	#8 FHS		.257"	2.250"	1.000"	.438"	.406"	.207 lb
6825	15		.656"	.375"	2.000"	1.500"	#10 FHS		.328"	3.250"	1.500"	.656"	.625"	.655 lb
6825-Black	15		.656"	.375"	2.000"	1.500"	#10 FHS		.328"	3.250"	1.500"	.656"	.625"	.655 lb
25-6725	25		11.00mm	8.48mm	37.05mm	25.00mm	#8 FHS		6.30mm	57.12mm	25.00mm	11.00mm	10.64mm	.0929 kg
25-6725-Black	25		11.00mm	8.48mm	37.05mm	25.00mm	#8 FHS		6.30mm	57.12mm	25.00mm	11.00mm	10.64mm	.0929 kg
40-6825	40		17.50mm	9.50mm	51.56mm	40.00mm	#10 FHS		8.33mm	84.12mm	40.00mm	17.50mm	17.42mm	.3137 kg
40-6825-Black	40		17.50mm	9.50mm	51.56mm	40.00mm	#10 FHS		8.33mm	84.12mm	40.00mm	17.50mm	17.42mm	.3137 kg

3 Slot Mount - Double Flange Short Standard Linear Bearing with Brake Holes

Part No.	Series	Color	A	B	C	D	E	F	G	H	J	K	L	M
6425	10	Clear	1.218"	.312"	.906"	.094"	1.624"	.156"	1.312"	.306"	.656"	.156"	2.936"	1.875"
6425-Black	10	Black	1.218"	.312"	.906"	.094"	1.624"	.156"	1.312"	.306"	.656"	.156"	2.936"	1.875"
6525	15	Clear	1.875"	.375"	1.500"	.125"	2.505"	.250"	2.005"	.493"	.748"	.250"	4.000"	2.812"
6525-Black	15	Black	1.875"	.375"	1.500"	.125"	2.505"	.250"	2.005"	.493"	.748"	.250"	4.000"	2.812"
25-6425	25	Clear	31.20mm	8.00mm	23.20mm	1.80mm	41.15mm	4.00mm	33.15mm	7.80mm	16.47mm	4.00mm	74.09mm	47.00mm
25-6425-Black	25	Black	31.20mm	8.00mm	23.20mm	1.80mm	41.15mm	4.00mm	33.15mm	7.80mm	16.47mm	4.00mm	74.09mm	47.00mm
40-6525	40	Clear	50.00mm	9.00mm	41.00mm	2.58mm	65.12mm	6.15mm	52.82mm	12.32mm	19.00mm	6.15mm	103.12mm	75.00mm
40-6525-Black	40	Black	50.00mm	9.00mm	41.00mm	2.58mm	65.12mm	6.15mm	52.82mm	12.32mm	19.00mm	6.15mm	103.12mm	75.00mm

Part No.	Series	N	P	Q	R	S	T	U	V	W	X	Y	Z	Weight
6425	10	.938"	.438"	.343"	1.468"	1.000"	#8 FHS	.265"	.257"	2.250"	1.000"	.438"	.406"	.205 lb
6425-Black	10	.938"	.438"	.343"	1.468"	1.000"	#8 FHS	.265"	.257"	2.250"	1.000"	.438"	.406"	.205 lb
6525	15	1.406"	.656"	.375"	2.000"	1.500"	#10 FHS	.344"	.328"	3.250"	1.500"	.656"	.625"	.653 lb
6525-Black	15	1.406"	.656"	.375"	2.000"	1.500"	#10 FHS	.344"	.328"	3.250"	1.500"	.656"	.625"	.653 lb
25-6425	25	23.50mm	11.00mm	8.48mm	37.05mm	25.00mm	#8 FHS	6.53mm	6.30mm	57.12mm	25.00mm	11.00mm	10.64mm	.0916 kg
25-6425-Black	25	23.50mm	11.00mm	8.48mm	37.05mm	25.00mm	#8 FHS	6.53mm	6.30mm	57.12mm	25.00mm	11.00mm	10.64mm	.0916 kg
40-6525	40	37.50mm	17.50mm	9.50mm	51.56mm	40.00mm	#10 FHS	8.71mm	8.33mm	84.12mm	40.00mm	17.50mm	17.42mm	.3116 kg
40-6525-Black	40	37.50mm	17.50mm	9.50mm	51.56mm	40.00mm	#10 FHS	8.71mm	8.33mm	84.12mm	40.00mm	17.50mm	17.42mm	.3116 kg

Material Specifications

Material	Alloy*	Process	Finish
Aluminum	6005A – T61	Extrude	Anodize

* Or comparable

Bearings & Pivots

3 Slot Mount - Double Flange Long Standard Linear Bearing

- Available with or without brake holes
- Includes pads, screws and shims; pads are self lubricating UHMW
- Designed for compression loads only; not intended for hanging loads

Fractional

Metric

Black Anodized

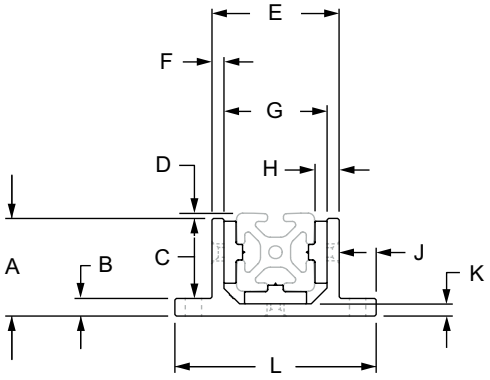

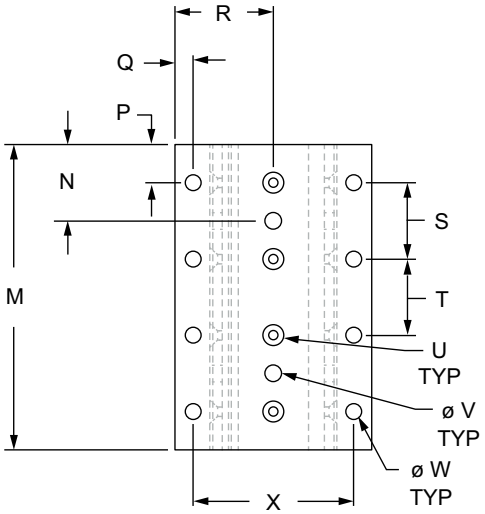

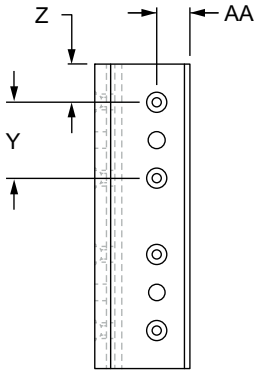

80/20 BUILD YOUR IDEA
More on 80/20® products available at 8020.net

3 Slot Mount - Double Flange Long Standard Linear Bearing (Continued)

3 Slot Mount - Double Flange Long Standard Linear Bearing

Part No.	Series	Color	A	B	C	D	E	F	G	H	J	K	L	M	N
6726	10	Clear	1.218"	.312"	.906"	.094"	1.624"	.156"	1.312"	.306"	.656"	.156"	2.936"	4.000"	–
6726-Black	10	Black	1.218"	.312"	.906"	.094"	1.624"	.156"	1.312"	.306"	.656"	.156"	2.936"	4.000"	
6826	15	Clear	1.875"	.375"	1.500"	.125"	2.505"	.250"	2.005"	.493"	.748"	.250"	4.000"	6.000"	
6826-Black	15	Black	1.875"	.375"	1.500"	.125"	2.505"	.250"	2.005"	.493"	.748"	.250"	4.000"	6.000"	
25-6726	25	Clear	31.20mm	8.00mm	23.20mm	1.80mm	41.15mm	4.00mm	33.15mm	7.80mm	16.47mm	4.00mm	74.09mm	100.00mm	
25-6726-Black	25	Black	31.20mm	8.00mm	23.20mm	1.80mm	41.15mm	4.00mm	33.15mm	7.80mm	16.47mm	4.00mm	74.09mm	100.00mm	
40-6826	40	Clear	50.00mm	9.00mm	41.00mm	2.58mm	65.12mm	6.15mm	52.82mm	12.32mm	19.00mm	6.15mm	103.12mm	160.00mm	
40-6826-Black	40	Black	50.00mm	9.00mm	41.00mm	2.58mm	65.12mm	6.15mm	52.82mm	12.32mm	19.00mm	6.15mm	103.12mm	160.00mm	

Part No.	Series	Color	P	Q	R	S	T	U	V	W	X	Y	Z	AA	Weight
6726	10	Clear	.500"	.343"	1.468"	1.000"	1.000"	#8 FHS	–	.257"	2.250"	1.000"	.500"	.406"	.437 lb
6726-Black	10	Black	.500"	.343"	1.468"	1.000"	1.000"	#8 FHS		.257"	2.250"	1.000"	.500"	.406"	.437 lb
6826	15	Clear	.750"	.375"	2.000"	1.500"	1.500"	#10 FHS		.328"	3.250"	1.500"	.750"	.625"	1.394 lb
6826-Black	15	Black	.750"	.375"	2.000"	1.500"	1.500"	#10 FHS		.328"	3.250"	1.500"	.750"	.625"	1.394 lb
25-6726	25	Clear	12.50mm	8.48mm	37.05mm	25.00mm	25.00mm	#8 FHS		6.30mm	57.12mm	25.00mm	12.50mm	10.64mm	.2028 kg
25-6726-Black	25	Black	12.50mm	8.48mm	37.05mm	25.00mm	25.00mm	#8 FHS		6.30mm	57.12mm	25.00mm	12.50mm	10.64mm	.2028 kg
40-6826	40	Clear	20.00mm	9.50mm	51.56mm	40.00mm	40.00mm	#10 FHS		8.33mm	84.12mm	40.00mm	20.00mm	17.42mm	.6651 kg
40-6826-Black	40	Black	20.00mm	9.50mm	51.56mm	40.00mm	40.00mm	#10 FHS		8.33mm	84.12mm	40.00mm	20.00mm	17.42mm	.6651 kg

3 Slot Mount - Double Flange Long Standard Linear Bearing with Brake Holes

Part No.	Series	Color	A	B	C	D	E	F	G	H	J	K	L	M	N
6426	10	Clear	1.218"	.312"	.906"	.094"	1.624"	.156"	1.312"	.306"	.656"	.156"	2.936"	4.000"	1.000"
6426-Black	10	Black	1.218"	.312"	.906"	.094"	1.624"	.156"	1.312"	.306"	.656"	.156"	2.936"	4.000"	1.000"
6526	15	Clear	1.875"	.375"	1.500"	.125"	2.505"	.250"	2.005"	.493"	.748"	.250"	4.000"	6.000"	1.500"
6526-Black	15	Black	1.875"	.375"	1.500"	.125"	2.505"	.250"	2.005"	.493"	.748"	.250"	4.000"	6.000"	1.500"
25-6426	25	Clear	31.20mm	8.00mm	23.20mm	1.80mm	41.15mm	4.00mm	33.15mm	7.80mm	16.47mm	4.00mm	74.09mm	100.00mm	25.00mm
25-6426-Black	25	Black	31.20mm	8.00mm	23.20mm	1.80mm	41.15mm	4.00mm	33.15mm	7.80mm	16.47mm	4.00mm	74.09mm	100.00mm	25.00mm
40-6526	40	Clear	50.00mm	9.00mm	41.00mm	2.58mm	65.12mm	6.15mm	52.82mm	12.32mm	19.00mm	6.15mm	103.12mm	160.00mm	40.00mm
40-6526-Black	40	Black	50.00mm	9.00mm	41.00mm	2.58mm	65.12mm	6.15mm	52.82mm	12.32mm	19.00mm	6.15mm	103.12mm	160.00mm	40.00mm

Part No.	Series	Color	P	Q	R	S	T	U	V	W	X	Y	Z	AA	Weight
6426	10	Clear	.500"	.343"	1.468"	1.000"	1.000"	#8 FHS	.265"	.257"	2.250"	1.000"	.500"	.406"	.433 lb
6426-Black	10	Black	.500"	.343"	1.468"	1.000"	1.000"	#8 FHS	.265"	.257"	2.250"	1.000"	.500"	.406"	.433 lb
6526	15	Clear	.750"	.375"	2.000"	1.500"	1.500"	#10 FHS	.344"	.328"	3.250"	1.500"	.750"	.625"	1.379 lb
6526-Black	15	Black	.750"	.375"	2.000"	1.500"	1.500"	#10 FHS	.344"	.328"	3.250"	1.500"	.750"	.625"	1.379 lb
25-6426	25	Clear	12.50mm	8.48mm	37.05mm	25.00mm	25.00mm	#8 FHS	6.53mm	6.30mm	57.12mm	25.00mm	12.50mm	10.64mm	.1972 kg
25-6426-Black	25	Black	12.50mm	8.48mm	37.05mm	25.00mm	25.00mm	#8 FHS	6.53mm	6.30mm	57.12mm	25.00mm	12.50mm	10.64mm	.1972 kg
40-6526	40	Clear	20.00mm	9.50mm	51.56mm	40.00mm	40.00mm	#10 FHS	8.71mm	8.33mm	84.12mm	40.00mm	20.00mm	17.42mm	.6650 kg
40-6526-Black	40	Black	20.00mm	9.50mm	51.56mm	40.00mm	40.00mm	#10 FHS	8.71mm	8.33mm	84.12mm	40.00mm	20.00mm	17.42mm	.6650 kg

Material Specifications

Material	Alloy*	Process	Finish
Aluminum	6005A – T61	Extrude	Anodize

* Or comparable

Bearings & Pivots

4 Slot Mount - Double Flange Short Standard Linear Bearing

- Available with or without brake holes
- Includes pads, screws and shims; pads are self lubricating UHMW
- Designed for compression loads only; not intended for hanging loads

Fractional

Metric

Black Anodized

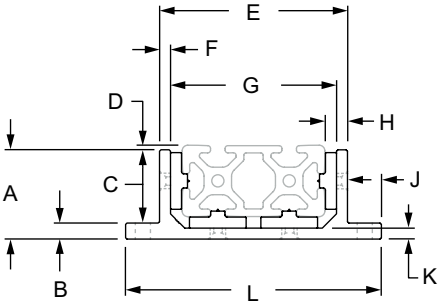

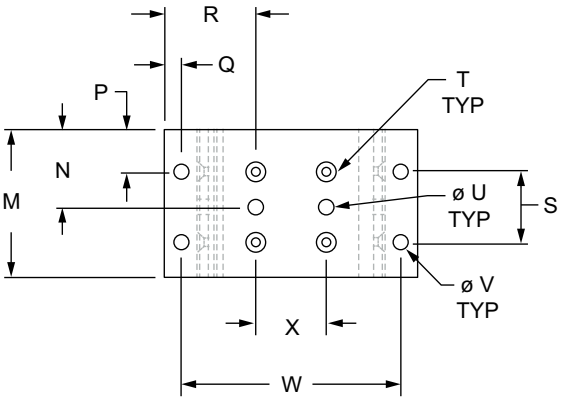

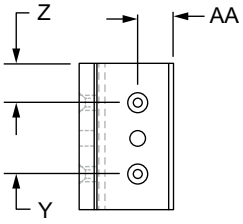

80/20 BUILD YOUR IDEA
More on 80/20® products available at 8020.net

4 Slot Mount - Double Flange Short Standard Linear Bearing (Continued)

4 Slot Mount - Double Flange Short Standard Linear Bearing

Part No.	Series	Color	A	B	C	D	E	F	G	H	J	K	L	M	N
6723	10	Clear	1.218"	.312"	.906"	.094"	2.630"	.156"	2.318"	.306"	.654"	.156"	3.938"	1.875"	—
6723-Black	10	Black	1.218"	.312"	.906"	.094"	2.630"	.156"	2.318"	.306"	.654"	.156"	3.938"	1.875"	
6823	15	Clear	1.875"	.375"	1.500"	.125"	4.005"	.250"	3.505"	.493"	.748"	.250"	5.500"	2.812"	
6823-Black	15	Black	1.875"	.375"	1.500"	.125"	4.005"	.250"	3.505"	.493"	.748"	.250"	5.500"	2.812"	
25-6723	25	Clear	31.24mm	8.00mm	23.24mm	1.80mm	66.29mm	3.99mm	58.32mm	7.80mm	16.48mm	3.99mm	99.26mm	47.00mm	
25-6723-Black	25	Black	31.24mm	8.00mm	23.24mm	1.80mm	66.29mm	3.99mm	58.32mm	7.80mm	16.48mm	3.99mm	99.26mm	47.00mm	
40-6823	40	Clear	50.00mm	9.00mm	41.00mm	2.58mm	105.31mm	6.15mm	93.01mm	12.32mm	19.00mm	6.15mm	143.31mm	75.00mm	
40-6823-Black	40	Black	50.00mm	9.00mm	41.00mm	2.58mm	105.31mm	6.15mm	93.01mm	12.32mm	19.00mm	6.15mm	143.31mm	75.00mm	

			P	Q	R	S	T	U	V	W	X	Y	Z	AA	Weight
6723	10	Clear	.438"	1.469"	.344"	1.000"	#8 FHS	—	.257"	3.250"	1.000"	1.000"	.438"	.406"	.247 lb
6723-Black	10	Black	.438"	1.469"	.344"	1.000"	#8 FHS		.257"	3.250"	1.000"	1.000"	.438"	.406"	.247 lb
6823	15	Clear	.656"	2.000"	.375"	1.500"	#10 FHS		.328"	4.750"	1.500"	1.500"	.656"	.625"	.797 lb
6823-Black	15	Black	.656"	2.000"	.375"	1.500"	#10 FHS		.328"	4.750"	1.500"	1.500"	.656"	.625"	.797 lb
25-6723	25	Clear	11.00mm	37.13mm	8.48mm	25.00mm	#8 FHS		6.53mm	82.23mm	25.00mm	25.00mm	11.00mm	10.69mm	.1154 kg
25-6723-Black	25	Black	11.00mm	37.13mm	8.48mm	25.00mm	#8 FHS		6.53mm	82.23mm	25.00mm	25.00mm	11.00mm	10.69mm	.1154 kg
40-6823	40	Clear	17.50mm	51.66mm	9.50mm	40.00mm	#10 FHS		8.33mm	124.31mm	40.00mm	40.00mm	17.50mm	17.42mm	.3792 kg
40-6823-Black	40	Black	17.50mm	51.66mm	9.50mm	40.00mm	#10 FHS		8.33mm	124.31mm	40.00mm	40.00mm	17.50mm	17.42mm	.3792 kg

4 Slot Mount - Double Flange Short Standard Linear Bearing with Brake Holes

Part No.	Series	Color	A	B	C	D	E	F	G	H	J	K	L	M	N
6423	10	Clear	1.218"	.312"	.906"	.094"	2.630"	.156"	2.318"	.306"	.654"	.156"	3.938"	1.875"	.938"
6423-Black	10	Black	1.218"	.312"	.906"	.094"	2.630"	.156"	2.318"	.306"	.654"	.156"	3.938"	1.875"	.938"
6523	15	Clear	1.875"	.375"	1.500"	.125"	4.005"	.250"	3.505"	.493"	.748"	.250"	5.500"	2.812"	1.406"
6523-Black	15	Black	1.875"	.375"	1.500"	.125"	4.005"	.250"	3.505"	.493"	.748"	.250"	5.500"	2.812"	1.406"
25-6423	25	Clear	31.24mm	8.00mm	23.24mm	1.80mm	66.29mm	3.99mm	58.32mm	7.80mm	16.48mm	3.99mm	99.26mm	47.00mm	23.50mm
25-6423-Black	25	Black	31.24mm	8.00mm	23.24mm	1.80mm	66.29mm	3.99mm	58.32mm	7.80mm	16.48mm	3.99mm	99.26mm	47.00mm	23.50mm
40-6523	40	Clear	50.00mm	9.00mm	41.00mm	2.58mm	105.31mm	6.15mm	93.01mm	12.32mm	19.00mm	6.15mm	143.31mm	75.00mm	37.50mm
40-6523-Black	40	Black	50.00mm	9.00mm	41.00mm	2.58mm	105.31mm	6.15mm	93.01mm	12.32mm	19.00mm	6.15mm	143.31mm	75.00mm	37.50mm

			P	Q	R	S	T	U	V	W	X	Y	Z	AA	Weight
6423	10	Clear	.438"	1.469"	.344"	1.000"	#8 FHS	.265"	.257"	3.250"	1.000"	1.000"	.438"	.406"	.244 lb
6423-Black	10	Black	.438"	1.469"	.344"	1.000"	#8 FHS	.265"	.257"	3.250"	1.000"	1.000"	.438"	.406"	.244 lb
6523	15	Clear	.656"	2.000"	.375"	1.500"	#10 FHS	.343"	.328"	4.750"	1.500"	1.500"	.656"	.625"	.785 lb
6523-Black	15	Black	.656"	2.000"	.375"	1.500"	#10 FHS	.343"	.328"	4.750"	1.500"	1.500"	.656"	.625"	.785 lb
25-6423	25	Clear	11.00mm	37.13mm	8.48mm	25.00mm	#8 FHS	6.53mm	6.53mm	82.23mm	25.00mm	25.00mm	11.00mm	10.69mm	.1076 kg
25-6423-Black	25	Black	11.00mm	37.13mm	8.48mm	25.00mm	#8 FHS	6.53mm	6.53mm	82.23mm	25.00mm	25.00mm	11.00mm	10.69mm	.1076 kg
40-6523	40	Clear	17.50mm	51.66mm	9.50mm	40.00mm	#10 FHS	8.71mm	8.33mm	124.31mm	40.00mm	40.00mm	17.50mm	17.42mm	.3702 kg
40-6523-Black	40	Black	17.50mm	51.66mm	9.50mm	40.00mm	#10 FHS	8.71mm	8.33mm	124.31mm	40.00mm	40.00mm	17.50mm	17.42mm	.3702 kg

Material Specifications

Material	Alloy*	Process	Finish
Aluminum	6005A – T61	Extrude	Anodize

* Or comparable

Bearings & Pivots

4 Slot Mount - Double Flange Long Standard Linear Bearing

- Available with or without brake holes
- Includes pads, screws and shims; pads are self lubricating UHMW
- Designed for compression loads only; not intended for hanging loads

Fractional

Metric

Black Anodized

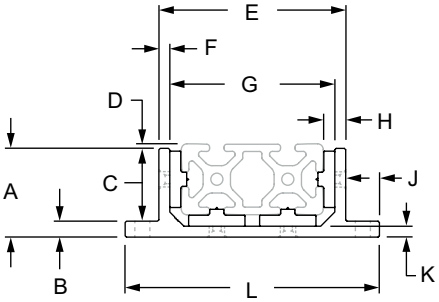

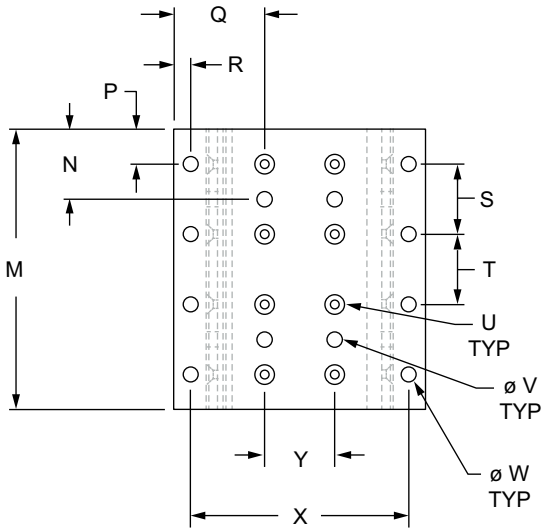

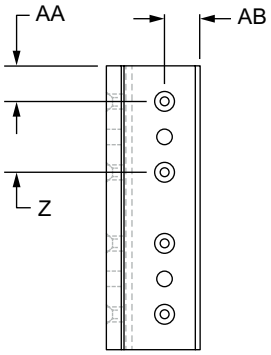

80/20 BUILD YOUR IDEA
More on 80/20® products available at 8020.net

4 Slot Mount - Double Flange Long Standard Linear Bearing (Continued)

4 Slot Mount - Double Flange Long Standard Linear Bearing

Part No.	Series	Color	A	B	C	D	E	F	G	H	J	K	L	M	N
6724	10	Clear	1.218"	.312"	.906"	.094"	2.630"	.156"	2.318"	.306"	.654"	.156"	3.938"	4.000"	—
6724-Black	10	Black	1.218"	.312"	.906"	.094"	2.630"	.156"	2.318"	.306"	.654"	.156"	3.938"	4.000"	
6824	15	Clear	1.875"	.375"	1.500"	.125"	4.005"	.250"	3.505"	.493"	.748"	.250"	5.500"	6.000"	
6824-Black	15	Black	1.875"	.375"	1.500"	.125"	4.005"	.250"	3.505"	.493"	.748"	.250"	5.500"	6.000"	
25-6724	25	Clear	31.24mm	8.00mm	23.24mm	1.80mm	66.29mm	3.99mm	58.32mm	7.80mm	16.48mm	3.99mm	99.26mm	100.00mm	
25-6724-Black	25	Black	31.24mm	8.00mm	23.24mm	1.80mm	66.29mm	3.99mm	58.32mm	7.80mm	16.48mm	3.99mm	99.26mm	100.00mm	
40-6824	40	Clear	50.00mm	9.00mm	41.00mm	2.58mm	105.31mm	6.15mm	93.01mm	12.32mm	19.00mm	6.15mm	143.31mm	160.00mm	
40-6824-Black	40	Black	50.00mm	9.00mm	41.00mm	2.58mm	105.31mm	6.15mm	93.01mm	12.32mm	19.00mm	6.15mm	143.31mm	160.00mm	

		P	Q	R	S	T	U	V	W	X	Y	Z	AA	AB	Weight
6724	10	.500"	1.469"	.344"	1.000"	1.000"	#8 FHS	—	.257"	3.250"	1.000"	1.000"	.500"	.406"	.519 lb
6724-Black	10	.500"	1.469"	.344"	1.000"	1.000"	#8 FHS		.257"	3.250"	1.000"	1.000"	.500"	.406"	.519 lb
6824	15	.750"	2.000"	.375"	1.500"	1.500"	#10 FHS		.328"	4.750"	1.500"	1.500"	.750"	.625"	1.691 lb
6824-Black	15	.750"	2.000"	.375"	1.500"	1.500"	#10 FHS		.328"	4.750"	1.500"	1.500"	.750"	.625"	1.691 lb
25-6724	25	12.50mm	37.13mm	8.48mm	25.00mm	25.00mm	#8 FHS		6.53mm	82.23mm	25.00mm	25.00mm	12.50mm	10.69mm	.2393 kg
25-6724-Black	25	12.50mm	37.13mm	8.48mm	25.00mm	25.00mm	#8 FHS		6.53mm	82.23mm	25.00mm	25.00mm	12.50mm	10.69mm	.2393 kg
40-6824	40	20.00mm	51.66mm	9.50mm	40.00mm	40.00mm	#10 FHS		8.33mm	124.31mm	40.00mm	40.00mm	20.00mm	17.42mm	.7938 kg
40-6824-Black	40	20.00mm	51.66mm	9.50mm	40.00mm	40.00mm	#10 FHS		8.33mm	124.31mm	40.00mm	40.00mm	20.00mm	17.42mm	.7938 kg

4 Slot Mount - Double Flange Long Standard Linear Bearing with Brake Holes

Part No.	Series	Color	A	B	C	D	E	F	G	H	J	K	L	M	N
6424	10	Clear	1.218"	.312"	.906"	.094"	2.630"	.156"	2.318"	.306"	.654"	.156"	3.938"	4.000"	1.000"
6424-Black	10	Black	1.218"	.312"	.906"	.094"	2.630"	.156"	2.318"	.306"	.654"	.156"	3.938"	4.000"	1.000"
6524	15	Clear	1.875"	.375"	1.500"	.125"	4.005"	.250"	3.505"	.493"	.748"	.250"	5.500"	6.000"	1.500"
6524-Black	15	Black	1.875"	.375"	1.500"	.125"	4.005"	.250"	3.505"	.493"	.748"	.250"	5.500"	6.000"	1.500"
25-6424	25	Clear	31.24mm	8.00mm	23.24mm	1.80mm	66.29mm	3.99mm	58.32mm	7.80mm	16.48mm	3.99mm	99.26mm	100.00mm	25.00mm
25-6424-Black	25	Black	31.24mm	8.00mm	23.24mm	1.80mm	66.29mm	3.99mm	58.32mm	7.80mm	16.48mm	3.99mm	99.26mm	100.00mm	25.00mm
40-6524	40	Clear	50.00mm	9.00mm	41.00mm	2.58mm	105.31mm	6.15mm	93.01mm	12.32mm	19.00mm	6.15mm	143.31mm	160.00mm	40.00mm
40-6524-Black	40	Black	50.00mm	9.00mm	41.00mm	2.58mm	105.31mm	6.15mm	93.01mm	12.32mm	19.00mm	6.15mm	143.31mm	160.00mm	40.00mm

		P	Q	R	S	T	U	V	W	X	Y	Z	AA	AB	Weight
6424	10	.500"	1.469"	.344"	1.000"	1.000"	#8 FHS	.265"	.257"	3.250"	1.000"	1.000"	.500"	.406"	.515 lb
6424-Black	10	.500"	1.469"	.344"	1.000"	1.000"	#8 FHS	.265"	.257"	3.250"	1.000"	1.000"	.500"	.406"	.515 lb
6524	15	.750"	2.000"	.375"	1.500"	1.500"	#10 FHS	.343"	.328"	4.750"	1.500"	1.500"	.750"	.625"	1.668 lb
6524-Black	15	.750"	2.000"	.375"	1.500"	1.500"	#10 FHS	.343"	.328"	4.750"	1.500"	1.500"	.750"	.625"	1.668 lb
25-6424	25	12.50mm	37.13mm	8.48mm	25.00mm	25.00mm	#8 FHS	6.53mm	6.53mm	82.23mm	25.00mm	25.00mm	12.50mm	10.69mm	.2265 kg
25-6424-Black	25	12.50mm	37.13mm	8.48mm	25.00mm	25.00mm	#8 FHS	6.53mm	6.53mm	82.23mm	25.00mm	25.00mm	12.50mm	10.69mm	.2265 kg
40-6524	40	20.00mm	51.66mm	9.50mm	40.00mm	40.00mm	#10 FHS	8.71mm	8.33mm	124.31mm	40.00mm	40.00mm	20.00mm	17.42mm	.7879 kg
40-6524-Black	40	20.00mm	51.66mm	9.50mm	40.00mm	40.00mm	#10 FHS	8.71mm	8.33mm	124.31mm	40.00mm	40.00mm	20.00mm	17.42mm	.7879 kg

Material Specifications

Material	Alloy*	Process	Finish
Aluminum	6005A – T61	Extrude	Anodize

* Or comparable

Bearings & Pivots

3 Slot Mount - Single Flange Short High-Cycle Linear Bearing

- Pads capable of withstanding repetitive cycles with sudden acceleration and deceleration
- Includes pads, screws and shims; pads are self lubricating UHMW
- Designed for compression loads only; not intended for hanging loads

Fractional

Metric

Black Anodized

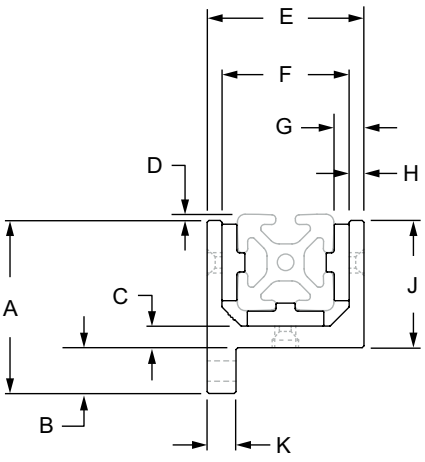

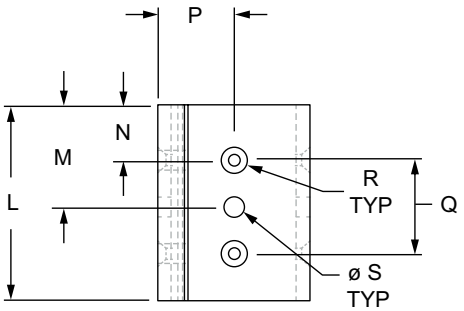

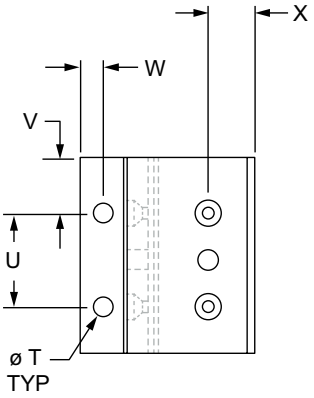

80/20 BUILD YOUR IDEA
More on 80/20® products available at 8020.net

3 Slot Mount - Single Flange Short High-Cycle Linear Bearing (Continued)

3 Slot Mount - Single Flange Short High-Cycle Linear Bearing

Part No.	Series	Color	A	B	C	D	E	F	G	H	J	K	L
6830	15	Clear	2.750"	.750"	.375"	.125"	2.505"	2.005"	.493"	.250"	2.000"	.500"	2.812"
6830-Black	15	Black	2.750"	.750"	.375"	.125"	2.505"	2.005"	.493"	.250"	2.000"	.500"	2.812"
40-6830	40	Clear	71.83mm	19.00mm	8.99mm	2.58mm	65.13mm	52.83mm	12.32mm	6.15mm	52.83mm	11.99mm	75.00mm
40-6830-Black	40	Black	71.83mm	19.00mm	8.99mm	2.58mm	65.13mm	52.83mm	12.32mm	6.15mm	52.83mm	11.99mm	75.00mm

Part No.	Series	M	N	P	Q	R	S	T	U	V	W	X	Weight
6830	15	—	.656"	1.253"	1.500"	10-32 FHSCS	—	.328"	1.500"	.656"	.375"	.625"	.708 lb
6830-Black	15		.656"	1.253"	1.500"	10-32 FHSCS		.328"	1.500"	.656"	.375"	.625"	.708 lb
40-6830	40		17.50mm	32.56mm	40.00mm	10-32 FHSCS		8.33mm	40.00mm	17.50mm	9.53mm	17.42mm	.3415 kg
40-6830-Black	40		17.50mm	32.56mm	40.00mm	10-32 FHSCS		8.33mm	40.00mm	17.50mm	9.53mm	17.42mm	.3415 kg

3 Slot Mount - Single Flange Short High-Cycle Linear Bearing with Brake Holes

Part No.	Series	Color	A	B	C	D	E	F	G	H	J	K	L
6530	15	Clear	2.750"	.750"	.375"	.125"	2.505"	2.005"	.493"	.250"	2.000"	.500"	2.812"
6530-Black	15	Black	2.750"	.750"	.375"	.125"	2.505"	2.005"	.493"	.250"	2.000"	.500"	2.812"
40-6530	40	Clear	71.83mm	19.00mm	8.99mm	2.58mm	65.13mm	52.83mm	12.32mm	6.15mm	52.83mm	11.99mm	75.00mm
40-6530-Black	40	Black	71.83mm	19.00mm	8.99mm	2.58mm	65.13mm	52.83mm	12.32mm	6.15mm	52.83mm	11.99mm	75.00mm

Part No.	Series	M	N	P	Q	R	S	T	U	V	W	X	Weight
6530	15	1.406"	.656"	1.253"	1.500"	10-32 FHSCS	.344"	.328"	1.500"	.656"	.375"	.625"	.697 lb
6530-Black	15	1.406"	.656"	1.253"	1.500"	10-32 FHSCS	.344"	.328"	1.500"	.656"	.375"	.625"	.697 lb
40-6530	40	37.50mm	17.50mm	32.56mm	40.00mm	10-32 FHSCS	8.71mm	8.33mm	40.00mm	17.50mm	9.53mm	17.42mm	.3371 kg
40-6530-Black	40	37.50mm	17.50mm	32.56mm	40.00mm	10-32 FHSCS	8.71mm	8.33mm	40.00mm	17.50mm	9.53mm	17.42mm	.3371 kg

Material Specifications

Material	Alloy*	Process	Finish
Aluminum	6005A – T61	Extrude	Anodize

* Or comparable

Bearings & Pivots

3 Slot Mount - Single Flange Long High-Cycle Linear Bearing

- Pads capable of withstanding repetitive cycles with sudden acceleration and deceleration
- Includes pads, screws and shims; pads are self lubricating UHMW
- Designed for compression loads only; not intended for hanging loads

Fractional

Metric

Black Anodized

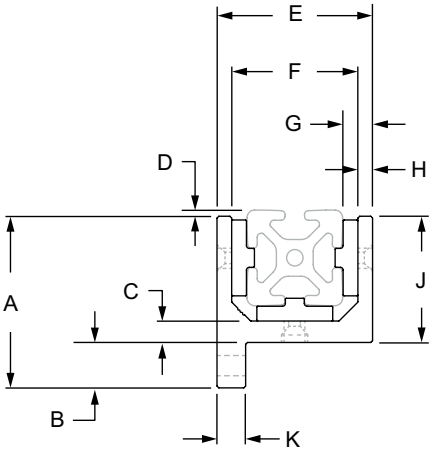

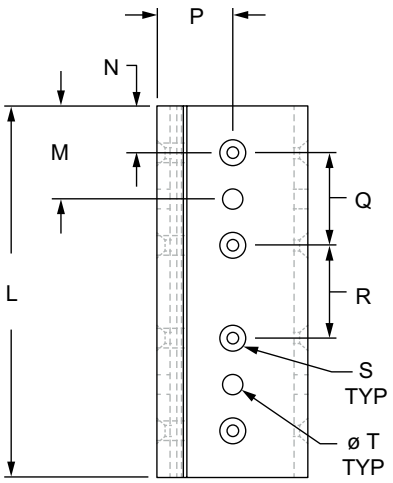

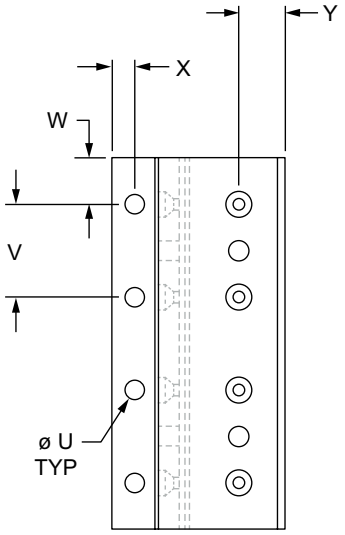

80/20 BUILD YOUR IDEA
More on 80/20® products available at 8020.net

3 Slot Mount - Single Flange Long High-Cycle Linear Bearing (Continued)

3 Slot Mount - Single Flange Long High-Cycle Linear Bearing

Part No.	Series	Color	A	B	C	D	E	F	G	H	J	K	L	M
6831	15	Clear	2.750"	.750"	.375"	.125"	2.505"	2.005"	.493"	.250"	2.000"	.500"	6.000"	—
6831-Black	15	Black	2.750"	.750"	.375"	.125"	2.505"	2.005"	.493"	.250"	2.000"	.500"	6.000"	
40-6831	40	Clear	71.83mm	19.00mm	8.99mm	2.58mm	65.13mm	52.83mm	12.32mm	6.15mm	52.83mm	11.99mm	160.00mm	
40-6831-Black	40	Black	71.83mm	19.00mm	8.99mm	2.58mm	65.13mm	52.83mm	12.32mm	6.15mm	52.83mm	11.99mm	160.00mm	
			N	P	Q	R	S	T	U	V	W	X	Y	Weight
6831	15	Clear	.750"	1.253"	1.500"	1.500"	10-32 FHSCS	—	.328"	1.500"	.656"	.375"	.625"	1.495 lb
6831-Black	15	Black	.750"	1.253"	1.500"	1.500"	10-32 FHSCS		.328"	1.500"	.656"	.375"	.625"	1.495 lb
40-6831	40	Clear	20.00mm	32.56mm	40.00mm	40.00mm	10-32 FHSCS		8.33mm	40.00mm	20.00mm	9.53mm	17.42mm	.7166 kg
40-6831-Black	40	Black	20.00mm	32.56mm	40.00mm	40.00mm	10-32 FHSCS		8.33mm	40.00mm	20.00mm	9.53mm	17.42mm	.7166 kg

3 Slot Mount - Single Flange Long High-Cycle Linear Bearing with Brake Holes

Part No.	Series	Color	A	B	C	D	E	F	G	H	J	K	L	M
6531	15	Clear	2.750"	.750"	.375"	.125"	2.505"	2.005"	.493"	.250"	2.000"	.500"	6.000"	1.500"
6531-Black	15	Black	2.750"	.750"	.375"	.125"	2.505"	2.005"	.493"	.250"	2.000"	.500"	6.000"	1.500"
40-6531	40	Clear	71.83mm	19.00mm	8.99mm	2.58mm	65.13mm	52.83mm	12.32mm	6.15mm	52.83mm	11.99mm	160.00mm	40.00mm
40-6531-Black	40	Black	71.83mm	19.00mm	8.99mm	2.58mm	65.13mm	52.83mm	12.32mm	6.15mm	52.83mm	11.99mm	160.00mm	40.00mm
			N	P	Q	R	S	T	U	V	W	X	Y	Weight
6531	15	Clear	.750"	1.253"	1.500"	1.500"	10-32 FHSCS	.344"	.328"	1.500"	.656"	.375"	.625"	1.476 lb
6531-Black	15	Black	.750"	1.253"	1.500"	1.500"	10-32 FHSCS	.344"	.328"	1.500"	.656"	.375"	.625"	1.476 lb
40-6531	40	Clear	20.00mm	32.56mm	40.00mm	40.00mm	10-32 FHSCS	8.71mm	8.33mm	40.00mm	20.00mm	9.53mm	17.42mm	.7087 kg
40-6531-Black	40	Black	20.00mm	32.56mm	40.00mm	40.00mm	10-32 FHSCS	8.71mm	8.33mm	40.00mm	20.00mm	9.53mm	17.42mm	.7087 kg

Material Specifications

Material	Alloy*	Process	Finish
Aluminum	6005A – T61	Extrude	Anodize

* Or comparable

Bearings & Pivots

3 Slot Mount - Double Flange Short High-Cycle Linear Bearing

- Pads capable of withstanding repetitive cycles with sudden acceleration and deceleration
- Includes pads, screws and shims; pads are self lubricating UHMW
- Designed for compression loads only; not intended for hanging loads

Fractional

Metric

Black Anodized

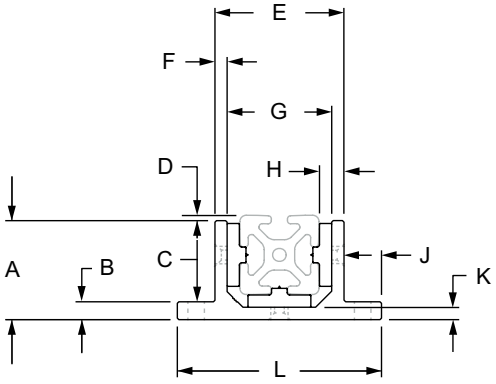

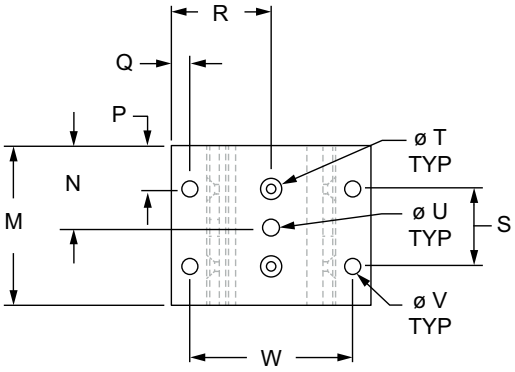

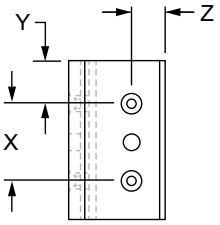

80/20 BUILD YOUR IDEA
More on 80/20® products available at 8020.net

3 Slot Mount - Double Flange Short High-Cycle Linear Bearing (Continued)

3 Slot Mount - Double Flange Short High-Cycle Linear Bearing

Part No.	Series	Color	A	B	C	D	E	F	G	H	J	K	L	M
6835	15	Clear	1.875"	.375"	1.500"	.125"	2.505"	.250"	2.005"	.493"	.748"	.250"	4.000"	2.812"
6835-Black	15	Black	1.875"	.375"	1.500"	.125"	2.505"	.250"	2.005"	.493"	.748"	.250"	4.000"	2.812"
40-6835	40	Clear	50.00mm	9.00mm	41.00mm	2.58mm	65.12mm	6.15mm	52.82mm	12.32mm	19.00mm	6.15mm	103.12mm	75.00mm
40-6835-Black	40	Black	50.00mm	9.00mm	41.00mm	2.58mm	65.12mm	6.15mm	52.82mm	12.32mm	19.00mm	6.15mm	103.12mm	75.00mm

Part No.	Series	N	P	Q	R	S	T	U	V	W	X	Y	Z	Weight
6835	15	—	.656"	.375"	2.000"	1.500"	10-32 FHSCS	—	.328"	3.250"	1.500"	.656"	.625"	.673 lb
6835-Black	15		.656"	.375"	2.000"	1.500"	10-32 FHSCS		.328"	3.250"	1.500"	.656"	.625"	.673 lb
40-6835	40		17.50mm	9.50mm	51.56mm	40.00mm	10-32 FHSCS		8.33mm	84.12mm	40.00mm	17.50mm	17.42mm	.3140 kg
40-6835-Black	40		17.50mm	9.50mm	51.56mm	40.00mm	10-32 FHSCS		8.33mm	84.12mm	40.00mm	17.50mm	17.42mm	.3140 kg

3 Slot Mount - Double Flange Short High-Cycle Linear Bearing with Brake Holes

Part No.	Series	Color	A	B	C	D	E	F	G	H	J	K	L	M
6535	15	Clear	1.875"	.375"	1.500"	.125"	2.505"	.250"	2.005"	.493"	.748"	.250"	4.000"	2.812"
6535-Black	15	Black	1.875"	.375"	1.500"	.125"	2.505"	.250"	2.005"	.493"	.748"	.250"	4.000"	2.812"
40-6535	40	Clear	50.00mm	9.00mm	41.00mm	2.58mm	65.12mm	6.15mm	52.82mm	12.32mm	19.00mm	6.15mm	103.12mm	75.00mm
40-6535-Black	40	Black	50.00mm	9.00mm	41.00mm	2.58mm	65.12mm	6.15mm	52.82mm	12.32mm	19.00mm	6.15mm	103.12mm	75.00mm
45-6525	45	Clear	56.40mm	9.50mm	46.90mm	2.02mm	70.44mm	6.40mm	57.64mm	12.57mm	24.78mm	7.10mm	120.00mm	80.00mm
45-6525-Black	45	Black	56.40mm	9.50mm	46.90mm	2.02mm	70.44mm	6.40mm	57.64mm	12.57mm	24.78mm	7.10mm	120.00mm	80.00mm

Part No.	Series	N	P	Q	R	S	T	U	V	W	X	Y	Z	Weight
6535	15	1.406"	.656"	.375"	2.000"	1.500"	10-32 FHSCS	.344"	.328"	3.250"	1.500"	.656"	.625"	.665 lb
6535-Black	15	1.406"	.656"	.375"	2.000"	1.500"	10-32 FHSCS	.344"	.328"	3.250"	1.500"	.656"	.625"	.665 lb
40-6535	40	37.50mm	17.50mm	9.50mm	51.56mm	40.00mm	10-32 FHSCS	8.71mm	8.33mm	84.12mm	40.00mm	17.50mm	17.42mm	.3172 kg
40-6535-Black	40	37.50mm	17.50mm	9.50mm	51.56mm	40.00mm	10-32 FHSCS	8.71mm	8.33mm	84.12mm	40.00mm	17.50mm	17.42mm	.3172 kg
45-6525	45	40.00mm	17.50mm	15.00mm	60.00mm	45.00mm	#10 FHSCS	8.74mm	8.33mm	90.00mm	45.00mm	17.50mm	20.48mm	.4073 kg
45-6525-Black	45	40.00mm	17.50mm	15.00mm	60.00mm	45.00mm	#10 FHSCS	8.74mm	8.33mm	90.00mm	45.00mm	17.50mm	20.48mm	.4073 kg

Material Specifications

Material	Alloy*	Process	Finish
Aluminum	6005A – T61	Extrude	Anodize

* Or comparable

Bearings & Pivots

3 Slot Mount - Double Flange Long High-Cycle Linear Bearing

- Pads capable of withstanding repetitive cycles with sudden acceleration and deceleration
- Includes pads, screws and shims; pads are self lubricating UHMW
- Designed for compression loads only; not intended for hanging loads

Fractional

Metric

Black Anodized

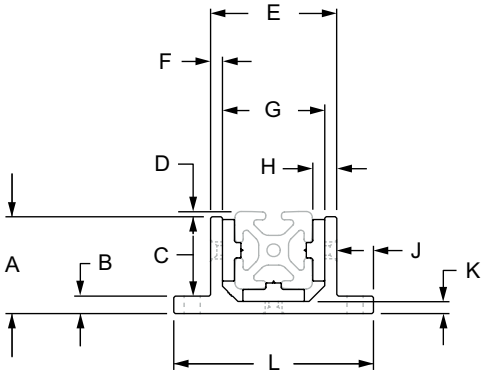

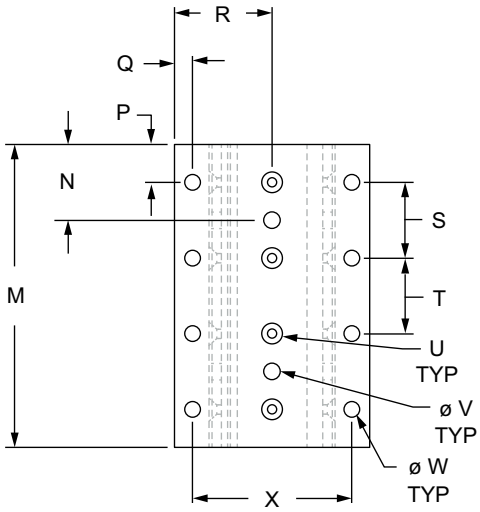

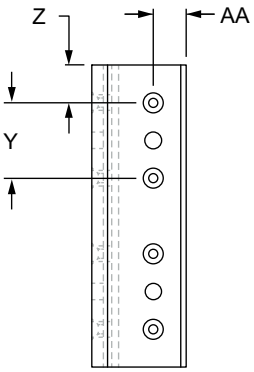

80/20 BUILD YOUR IDEA
More on 80/20® products available at 8020.net

3 Slot Mount - Double Flange Long High-Cycle Linear Bearing (Continued)

3 Slot Mount - Double Flange Long High-Cycle Linear Bearing

Part No.	Series	Color	A	B	C	D	E	F	G	H	J	K	L	M	N
6836	15	Clear	1.875"	.375"	1.500"	.125"	2.505"	.250"	2.005"	.493"	.748"	.250"	4.000"	6.000"	—
6836-Black	15	Black	1.875"	.375"	1.500"	.125"	2.505"	.250"	2.005"	.493"	.748"	.250"	4.000"	6.000"	
40-6836	40	Clear	50.00mm	9.00mm	41.00mm	2.58mm	65.12mm	6.15mm	52.82mm	12.32mm	19.00mm	6.15mm	103.12mm	160.00mm	
40-6836-Black	40	Black	50.00mm	9.00mm	41.00mm	2.58mm	65.12mm	6.15mm	52.82mm	12.32mm	19.00mm	6.15mm	103.12mm	160.00mm	

Part No.	Series	Color	P	Q	R	S	T	U	V	W	X	Y	Z	AA	Weight
6836	15	Clear	.750"	.375"	2.000"	1.500"	1.500"	10-32 FHSCS	—	.328"	3.250"	1.500"	.750"	.625"	1.425 lb
6836-Black	15	Black	.750"	.375"	2.000"	1.500"	1.500"	10-32 FHSCS		.328"	3.250"	1.500"	.750"	.625"	1.425 lb
40-6836	40	Clear	20.00mm	9.50mm	51.56mm	40.00mm	40.00mm	10-32 FHSCS		8.33mm	84.12mm	40.00mm	20.00mm	17.42mm	.6852 kg
40-6836-Black	40	Black	20.00mm	9.50mm	51.56mm	40.00mm	40.00mm	10-32 FHSCS		8.33mm	84.12mm	40.00mm	20.00mm	17.42mm	.6852 kg

3 Slot Mount - Double Flange Long High-Cycle Linear Bearing with Brake Holes

Part No.	Series	Color	A	B	C	D	E	F	G	H	J	K	L	M	N
6536	15	Clear	1.875"	.375"	1.500"	.125"	2.505"	.250"	2.005"	.493"	.748"	.250"	4.000"	6.000"	1.500"
6536-Black	15	Black	1.875"	.375"	1.500"	.125"	2.505"	.250"	2.005"	.493"	.748"	.250"	4.000"	6.000"	1.500"
40-6536	40	Clear	50.00mm	9.00mm	41.00mm	2.58mm	65.12mm	6.15mm	52.82mm	12.32mm	19.00mm	6.15mm	103.12mm	160.00mm	40.00mm
40-6536-Black	40	Black	50.00mm	9.00mm	41.00mm	2.58mm	65.12mm	6.15mm	52.82mm	12.32mm	19.00mm	6.15mm	103.12mm	160.00mm	40.00mm
45-6526	45	Clear	56.40mm	9.50mm	46.90mm	2.02mm	70.44mm	6.40mm	57.64mm	12.57mm	24.78mm	7.10mm	120.00mm	170.00mm	40.00mm
45-6526-Black	45	Black	56.40mm	9.50mm	46.90mm	2.02mm	70.44mm	6.40mm	57.64mm	12.57mm	24.78mm	7.10mm	120.00mm	170.00mm	40.00mm

Part No.	Series	Color	P	Q	R	S	T	U	V	W	X	Y	Z	AA	Weight
6536	15	Clear	.750"	.375"	2.000"	1.500"	1.500"	10-32 FHSCS	.344"	.328"	3.250"	1.500"	.750"	.625"	1.408 lb
6536-Black	15	Black	.750"	.375"	2.000"	1.500"	1.500"	10-32 FHSCS	.344"	.328"	3.250"	1.500"	.750"	.625"	1.408 lb
40-6536	40	Clear	20.00mm	9.50mm	51.56mm	40.00mm	40.00mm	10-32 FHSCS	8.71mm	8.33mm	84.12mm	40.00mm	20.00mm	17.42mm	.6814 kg
40-6536-Black	40	Black	20.00mm	9.50mm	51.56mm	40.00mm	40.00mm	10-32 FHSCS	8.71mm	8.33mm	84.12mm	40.00mm	20.00mm	17.42mm	.6814 kg
45-6526	45	Clear	17.50mm	15.00mm	60.00mm	45.00mm	45.00mm	#10 FHSCS	8.74mm	8.33mm	90.00mm	45.00mm	17.50mm	20.48mm	.8587 kg
45-6526-Black	45	Black	17.50mm	15.00mm	60.00mm	45.00mm	45.00mm	#10 FHSCS	8.74mm	8.33mm	90.00mm	45.00mm	17.50mm	20.48mm	.8587 kg

Material Specifications

Material	Alloy*	Process	Finish
Aluminum	6005A – T61	Extrude	Anodize

* Or comparable

Bearings & Pivots

4 Slot Mount - Double Flange Short High-Cycle Linear Bearing

- Pads capable of withstanding repetitive cycles with sudden acceleration and deceleration
- Includes pads, screws and shims; pads are self lubricating UHMW
- Designed for compression loads only; not intended for hanging loads

Fractional

Metric

Black Anodized

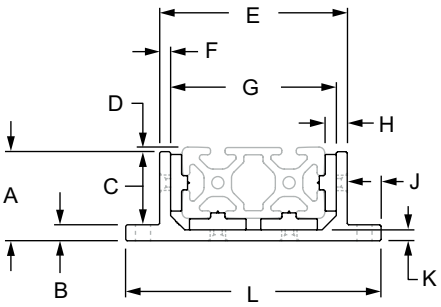

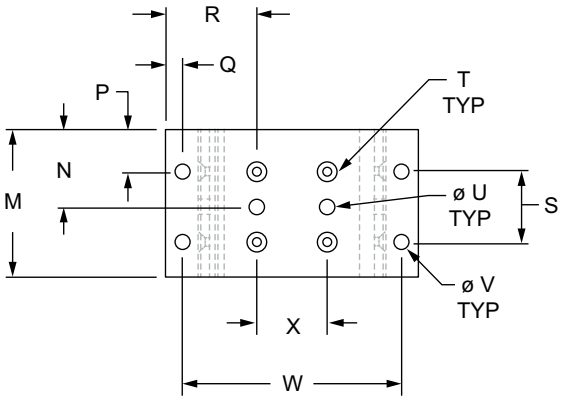

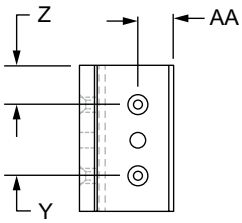

80/20 BUILD YOUR IDEA
More on 80/20® products available at 8020.net

4 Slot Mount - Double Flange Short High-Cycle Linear Bearing (Continued)

4 Slot Mount - Double Flange Short High-Cycle Linear Bearing

Part No.	Series	Color	A	B	C	D	E	F	G	H	J	K	L	M	N
6833	15	Clear	1.875"	.375"	1.500"	.125"	4.005"	.250"	3.505"	.493"	.748"	.250"	5.500"	2.812"	—
6833-Black	15	Black	1.875"	.375"	1.500"	.125"	4.005"	.250"	3.505"	.493"	.748"	.250"	5.500"	2.812"	
40-6833	40	Clear	50.00mm	9.00mm	41.00mm	2.58mm	105.31mm	6.15mm	93.01mm	12.32mm	19.00mm	6.15mm	143.31mm	75.00mm	
40-6833-Black	40	Black	50.00mm	9.00mm	41.00mm	2.58mm	105.31mm	6.15mm	93.01mm	12.32mm	19.00mm	6.15mm	143.31mm	75.00mm	

			P	Q	R	S	T	U	V	W	X	Y	Z	AA	Weight
6833	15	Clear	.656"	2.000"	.375"	1.500"	10-32 FHSCS	—	.328"	4.750"	1.500"	1.500"	.656"	.625"	.818 lb
6833-Black	15	Black	.656"	2.000"	.375"	1.500"	10-32 FHSCS		.328"	4.750"	1.500"	1.500"	.656"	.625"	.818 lb
40-6833	40	Clear	17.50mm	51.66mm	9.50mm	40.00mm	10-32 FHSCS		8.33mm	124.31mm	40.00mm	40.00mm	17.50mm	17.42mm	.3842 kg
40-6833-Black	40	Black	17.50mm	51.66mm	9.50mm	40.00mm	10-32 FHSCS		8.33mm	124.31mm	40.00mm	40.00mm	17.50mm	17.42mm	.3842 kg

4 Slot Mount - Double Flange Short High-Cycle Linear Bearing with Brake Holes

Part No.	Series	Color	A	B	C	D	E	F	G	H	J	K	L	M	N
6533	15	Clear	1.875"	.375"	1.500"	.125"	4.005"	.250"	3.505"	.493"	.748"	.250"	5.500"	2.812"	1.406"
6533-Black	15	Black	1.875"	.375"	1.500"	.125"	4.005"	.250"	3.505"	.493"	.748"	.250"	5.500"	2.812"	1.406"
40-6533	40	Clear	50.00mm	9.00mm	41.00mm	2.58mm	105.31mm	6.15mm	93.01mm	12.32mm	19.00mm	6.15mm	143.31mm	75.00mm	37.50mm
40-6533-Black	40	Black	50.00mm	9.00mm	41.00mm	2.58mm	105.31mm	6.15mm	93.01mm	12.32mm	19.00mm	6.15mm	143.31mm	75.00mm	37.50mm

			P	Q	R	S	T	U	V	W	X	Y	Z	AA	Weight
6533	15	Clear	.656"	2.000"	.375"	1.500"	10-32 FHSCS	.343"	.328"	4.750"	1.500"	1.500"	.656"	.625"	.808 lb
6533-Black	15	Black	.656"	2.000"	.375"	1.500"	10-32 FHSCS	.343"	.328"	4.750"	1.500"	1.500"	.656"	.625"	.808 lb
40-6533	40	Clear	17.50mm	51.66mm	9.50mm	40.00mm	10-32 FHSCS	8.71mm	8.33mm	124.31mm	40.00mm	40.00mm	17.50mm	17.42mm	.3916 kg
40-6533-Black	40	Black	17.50mm	51.66mm	9.50mm	40.00mm	10-32 FHSCS	8.71mm	8.33mm	124.31mm	40.00mm	40.00mm	17.50mm	17.42mm	.3916 kg

Material Specifications

Material	Alloy*	Process	Finish
Aluminum	6005A – T61	Extrude	Anodize

* Or comparable

Bearings & Pivots

4 Slot Mount - Double Flange Long High-Cycle Linear Bearing

- Pads capable of withstanding repetitive cycles with sudden acceleration and deceleration
- Includes pads, screws and shims; pads are self lubricating UHMW
- Designed for compression loads only; not intended for hanging loads

Fractional

Metric

Black Anodized

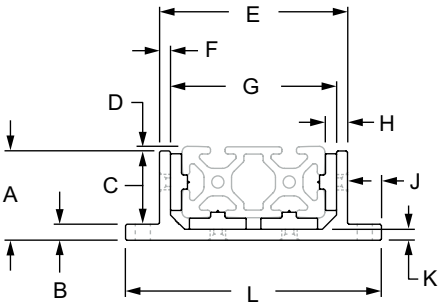

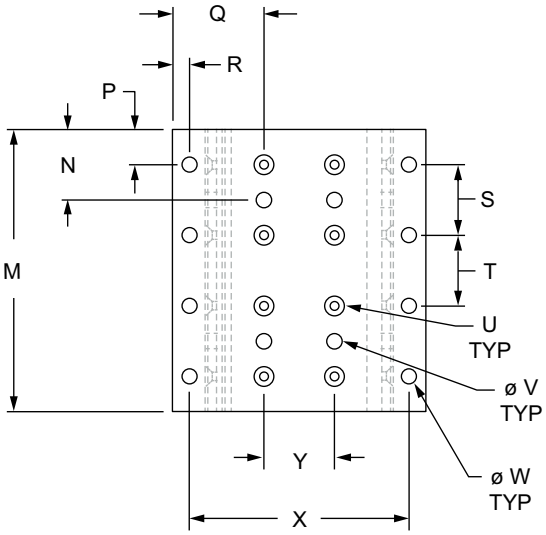

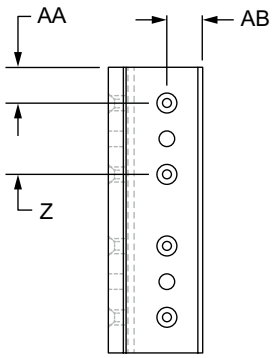

80/20 BUILD YOUR IDEA
More on 80/20® products available at 8020.net

4 Slot Mount - Double Flange Long High-Cycle Linear Bearing (Continued)

4 Slot Mount - Double Flange Long High-Cycle Linear Bearing

Part No.	Series	Color	A	B	C	D	E	F	G	H	J	K	L	M	N
6834	15	Clear	1.875"	.375"	1.500"	.125"	4.005"	.250"	3.505"	.493"	.748"	.250"	5.500"	6.000"	—
6834-Black	15	Black	1.875"	.375"	1.500"	.125"	4.005"	.250"	3.505"	.493"	.748"	.250"	5.500"	6.000"	
40-6834	40	Clear	50.00mm	9.00mm	41.00mm	2.58mm	105.31mm	6.15mm	93.01mm	12.32mm	19.00mm	6.15mm	143.31mm	160.00mm	
40-6834-Black	40	Black	50.00mm	9.00mm	41.00mm	2.58mm	105.31mm	6.15mm	93.01mm	12.32mm	19.00mm	6.15mm	143.31mm	160.00mm	

Part No.	Series	P	Q	R	S	T	U	V	W	X	Y	Z	AA	AB	Weight
6834	15	.750"	.375"	2.000"	1.500"	1.500"	10-32 FHSCS	—	.328"	4.750"	1.500"	1.500"	.750"	.625"	1.727 lb
6834-Black	15	.750"	.375"	2.000"	1.500"	1.500"	10-32 FHSCS		.328"	4.750"	1.500"	1.500"	.750"	.625"	1.727 lb
40-6834	40	20.00mm	9.50mm	51.66mm	40.00mm	40.00mm	10-32 FHSCS		8.33mm	124.31mm	40.00mm	40.00mm	20.00mm	17.42mm	.8142 kg
40-6834-Black	40	20.00mm	9.50mm	51.66mm	40.00mm	40.00mm	10-32 FHSCS		8.33mm	124.31mm	40.00mm	40.00mm	20.00mm	17.42mm	.8142 kg

4 Slot Mount - Double Flange Long High-Cycle Linear Bearing with Brake Holes

Part No.	Series	Color	A	B	C	D	E	F	G	H	J	K	L	M	N
6534	15	Clear	1.875"	.375"	1.500"	.125"	4.005"	.250"	3.505"	.493"	.748"	.250"	5.500"	6.000"	1.500"
6534-Black	15	Black	1.875"	.375"	1.500"	.125"	4.005"	.250"	3.505"	.493"	.748"	.250"	5.500"	6.000"	1.500"
40-6534	40	Clear	50.00mm	9.00mm	41.00mm	2.58mm	105.31mm	6.15mm	93.01mm	12.32mm	19.00mm	6.15mm	143.31mm	160.00mm	40.00mm
40-6534-Black	40	Black	50.00mm	9.00mm	41.00mm	2.58mm	105.31mm	6.15mm	93.01mm	12.32mm	19.00mm	6.15mm	143.31mm	160.00mm	40.00mm

Part No.	Series	P	Q	R	S	T	U	V	W	X	Y	Z	AA	AB	Weight
6534	15	.750"	.375"	2.000"	1.500"	1.500"	10-32 FHSCS	.343"	.328"	4.750"	1.500"	1.500"	.750"	.625"	1.706 lb
6534-Black	15	.750"	.375"	2.000"	1.500"	1.500"	10-32 FHSCS	.343"	.328"	4.750"	1.500"	1.500"	.750"	.625"	1.706 lb
40-6534	40	20.00mm	9.50mm	51.66mm	40.00mm	40.00mm	10-32 FHSCS	8.71mm	8.33mm	124.31mm	40.00mm	40.00mm	20.00mm	17.42mm	.8204 kg
40-6534-Black	40	20.00mm	9.50mm	51.66mm	40.00mm	40.00mm	10-32 FHSCS	8.71mm	8.33mm	124.31mm	40.00mm	40.00mm	20.00mm	17.42mm	.8204 kg

Material Specifications

Material	Alloy*	Process	Finish
Aluminum	6005A – T61	Extrude	Anodize

* Or comparable

Bearings & Pivots

Single Short UniBearing™

- Comes with pre-drilled brake holes and tapped mounting holes for attachment of accessories
- Can move or be fixed; pads mounted using stainless steel flathead socket cap screws

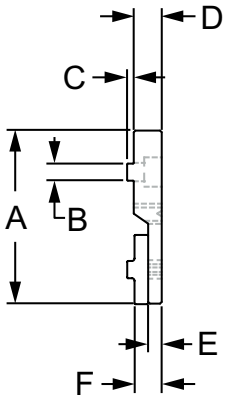

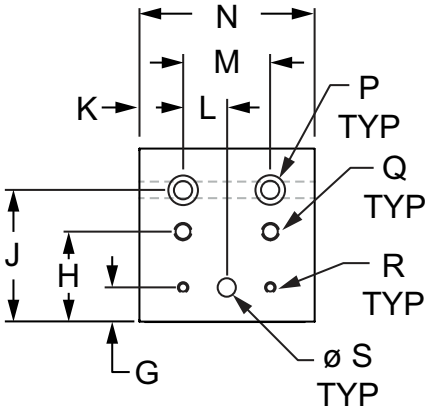

Part No.	Series	Color	A	B	C	D	E	F	G	H	J
6760	10	Clear	2.063"	.244"	.060"	.312"	.156"	.306"	.398"	1.063"	1.563"
6760-Black	10	Black	2.063"	.244"	.060"	.312"	.156"	.306"	.398"	1.063"	1.563"
6860	15	Clear	3.125"	.309"	.120"	.505"	.245"	.485"	.616"	1.625"	2.375"
6860-Black	15	Black	3.125"	.309"	.120"	.505"	.245"	.485"	.616"	1.625"	2.375"
25-6760	25	Clear	52.40mm	6.20mm	1.52mm	7.92mm	3.96mm	7.77mm	10.11mm	27.00mm	39.70mm
25-6760-Black	25	Black	52.40mm	6.20mm	1.52mm	7.92mm	3.96mm	7.77mm	10.11mm	27.00mm	39.70mm
40-6860	40	Clear	82.45mm	7.85mm	3.05mm	12.83mm	6.22mm	12.32mm	15.78mm	42.45mm	62.39mm
40-6860-Black	40	Black	82.45mm	7.85mm	3.05mm	12.83mm	6.22mm	12.32mm	15.78mm	42.45mm	62.39mm

Part No.	Series	Color	K	L	M	N	P	Q	R	S	Weight
6760	10	Clear	.437"	.500"	1.000"	1.875"	1/4-20 SHCS	1/4-20	8-32	.257"	.129 lb
6760-Black	10	Black	.437"	.500"	1.000"	1.875"	1/4-20 SHCS	1/4-20	8-32	.257"	.129 lb
6860	15	Clear	.656"	.750"	1.500"	2.812"	5/16 SHCS	5/16-18	10-24	.328"	.449 lb
6860-Black	15	Black	.656"	.750"	1.500"	2.812"	5/16 SHCS	5/16-18	10-24	.328"	.449 lb
25-6760	25	Clear	11.00mm	12.50mm	25.00mm	47.00mm	M6 SHCS	M6 x 1.0	8-32	6.30mm	.0611 kg
25-6760-Black	25	Black	11.00mm	12.50mm	25.00mm	47.00mm	M6 SHCS	M6 x 1.0	8-32	6.30mm	.0611 kg
40-6860	40	Clear	17.50mm	20.00mm	40.00mm	75.00mm	M8 SHCS	M8 x 1.25	10-24	8.33mm	.2157 kg
40-6860-Black	40	Black	17.50mm	20.00mm	40.00mm	75.00mm	M8 SHCS	M8 x 1.25	10-24	8.33mm	.2157 kg

Material Specifications

Material	Alloy*	Process	Finish
Aluminum	6005A – T61	Extrude	Anodize

* Or comparable

Included Hardware (Mount to T-Slot)

Series	Part No.	Qty.	Bolt	Part No.	Qty.	T-Nut
10	3058	2	1/4-20 x 3/8" SHCS	3280	1	Double Slide-in Economy
15	3110	2	5/16-18 x 5/8" SHCS	3279	1	Double Slide-in Economy
25	13-6508	2	M6 x 8mm SHCS	25-1962	1	Double Slide-in Economy
40	13-8516	2	M8 x 16mm SHCS	40-1982	1	Double Slide-in Economy

80/20 BUILD YOUR IDEA
More on 80/20® products available at 8020.net

Single Long UniBearing™

- Comes with pre-drilled brake holes and tapped mounting holes for attachment of accessories
- Can move or be fixed; pads mounted using stainless steel flathead socket cap screws

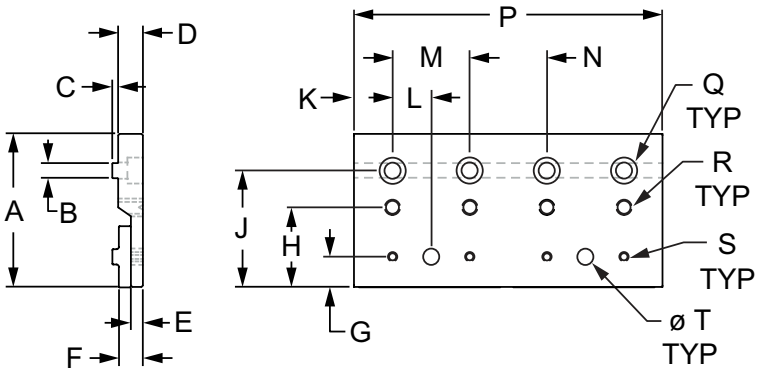

Part No.	Series	Color	A	B	C	D	E	F	G	H	J
6762	10	Clear	2.063"	.244"	.060"	.312"	.156"	.306"	.398"	1.063"	1.563"
6762-Black	10	Black	2.063"	.244"	.060"	.312"	.156"	.306"	.398"	1.063"	1.563"
6862	15	Clear	3.125"	.309"	.120"	.505"	.245"	.485"	.616"	1.625"	2.375"
6862-Black	15	Black	3.125"	.309"	.120"	.505"	.245"	.485"	.616"	1.625"	2.375"
25-6762	25	Clear	52.40mm	6.20mm	1.52mm	7.92mm	3.96mm	7.77mm	10.11mm	27.00mm	39.70mm
25-6762-Black	25	Black	52.40mm	6.20mm	1.52mm	7.92mm	3.96mm	7.77mm	10.11mm	27.00mm	39.70mm
40-6862	40	Clear	82.45mm	7.85mm	3.05mm	12.83mm	6.22mm	12.32mm	15.78mm	42.45mm	62.39mm
40-6862-Black	40	Black	82.45mm	7.85mm	3.05mm	12.83mm	6.22mm	12.32mm	15.78mm	42.45mm	62.39mm

Part No.	Series	K	L	M	N	P	Q	R	S	T	Weight
6762	10	.437"	.500"	1.000"	1.000"	4.000"	1/4-20 SHCS	1/4-20	8-32	.257"	.265 lb
6762-Black	10	.437"	.500"	1.000"	1.000"	4.000"	1/4-20 SHCS	1/4-20	8-32	.257"	.265 lb
6862	15	.750"	.750"	1.500"	1.500"	6.000"	5/16 SHCS	5/16-18	10-24	.328"	.933 lb
6862-Black	15	.750"	.750"	1.500"	1.500"	6.000"	5/16 SHCS	5/16-18	10-24	.328"	.933 lb
25-6762	25	12.50mm	12.50mm	25.00mm	25.00mm	100.00mm	M6 SHCS	M6 x 1.0	8-32	6.30mm	.1240 kg
25-6762-Black	25	12.50mm	12.50mm	25.00mm	25.00mm	100.00mm	M6 SHCS	M6 x 1.0	8-32	6.30mm	.1240 kg
40-6862	40	20.00mm	20.00mm	40.00mm	40.00mm	160.00mm	M8 SHCS	M8 x 1.25	10-24	8.33mm	.4522 kg
40-6862-Black	40	20.00mm	20.00mm	40.00mm	40.00mm	160.00mm	M8 SHCS	M8 x 1.25	10-24	8.33mm	.4522 kg

Material Specifications

Material	Alloy*	Process	Finish
Aluminum	6005A – T61	Extrude	Anodize

* Or comparable

Included Hardware (Mount to T-Slot)

Series	Part No.	Qty.	Bolt	Part No.	Qty.	T-Nut
10	3058	4	1/4-20 x 3/8" SHCS	3280	2	Double Slide-in Economy
15	3110	4	5/16-18 x 5/8" SHCS	3279	2	Double Slide-in Economy
25	13-6508	4	M6 x 8mm SHCS	25-1962	2	Double Slide-in Economy
40	13-8516	4	M8 x 16mm SHCS	40-1982	2	Double Slide-in Economy

Bearings & Pivots

Double Short UniBearing™

- Comes with pre-drilled brake holes and tapped mounting holes for attachment of accessories
- Can move or be fixed; pads mounted using stainless steel flathead socket cap screws

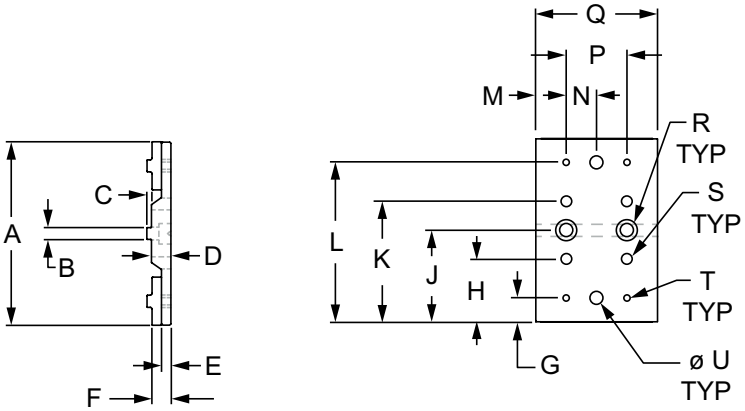

Part No.	Series	Color	A	B	C	D	E	F	G	H	J	K
6764	10	Clear	3.125"	.244"	.060"	.312"	.156"	.306"	.397"	1.063"	1.563"	2.063"
6764-Black	10	Black	3.125"	.244"	.060"	.312"	.156"	.306"	.397"	1.063"	1.563"	2.063"
6864	15	Clear	4.750"	.308"	.120"	.505"	.245"	.485"	.616"	1.625"	2.375"	3.125"
6864-Black	15	Black	4.750"	.308"	.120"	.505"	.245"	.485"	.616"	1.625"	2.375"	3.125"
25-6764	25	Clear	79.38mm	6.20mm	1.52mm	7.92mm	3.96mm	7.77mm	10.08mm	27.00mm	39.70mm	52.40mm
25-6764-Black	25	Black	79.38mm	6.20mm	1.52mm	7.92mm	3.96mm	7.77mm	10.08mm	27.00mm	39.70mm	52.40mm
40-6864	40	Clear	124.78mm	7.82mm	3.05mm	12.83mm	6.22mm	12.32mm	15.78mm	42.45mm	62.39mm	82.33mm
40-6864-Black	40	Black	124.78mm	7.82mm	3.05mm	12.83mm	6.22mm	12.32mm	15.78mm	42.45mm	62.39mm	82.33mm

			L	M	N	P	Q	R	S	T	U	Weight
6764	10	Clear	2.728"	.437"	.500"	1.000"	1.875"	1/4-20 SHCS	1/4-20	8-32	.257"	.173 lb
6764-Black	10	Black	2.728"	.437"	.500"	1.000"	1.875"	1/4-20 SHCS	1/4-20	8-32	.257"	.173 lb
6864	15	Clear	4.134"	.656"	.750"	1.500"	2.812"	5/16 SHCS	5/16-18	10-24	.328"	.588 lb
6864-Black	15	Black	4.134"	.656"	.750"	1.500"	2.812"	5/16 SHCS	5/16-18	10-24	.328"	.588 lb
25-6764	25	Clear	69.29mm	11.00mm	12.50mm	25.00mm	47.00mm	M6 SHCS	M6 x 1.0	8-32	6.30mm	.0819 kg
25-6764-Black	25	Black	69.29mm	11.00mm	12.50mm	25.00mm	47.00mm	M6 SHCS	M6 x 1.0	8-32	6.30mm	.0819 kg
40-6864	40	Clear	109.00mm	17.50mm	20.00mm	40.00mm	75.00mm	M8 SHCS	M8 x 1.25	10-24	8.33mm	.2840 kg
40-6864-Black	40	Black	109.00mm	17.50mm	20.00mm	40.00mm	75.00mm	M8 SHCS	M8 x 1.25	10-24	8.33mm	.2840 kg

Material Specifications

Material	Alloy*	Process	Finish
Aluminum	6005A – T61	Extrude	Anodize

* Or comparable

Included Hardware (Mount to T-Slot)

Series	Part No.	Qty.	Bolt	Part No.	Qty.	T-Nut
10	3058	2	1/4-20 x 3/8" SHCS	3280	1	Double Slide-in Economy
15	3110	2	5/16-18 x 5/8" SHCS	3279	1	Double Slide-in Economy
25	13-6508	2	M6 x 8mm SHCS	25-1962	1	Double Slide-in Economy
40	13-8516	2	M8 x 16mm SHCS	40-1982	1	Double Slide-in Economy

80/20 BUILD YOUR IDEA
More on 80/20® products available at 8020.net

Double Long UniBearing™

- Comes with pre-drilled brake holes and tapped mounting holes for attachment of accessories
- Can move or be fixed; pads mounted using stainless steel flathead socket cap screws

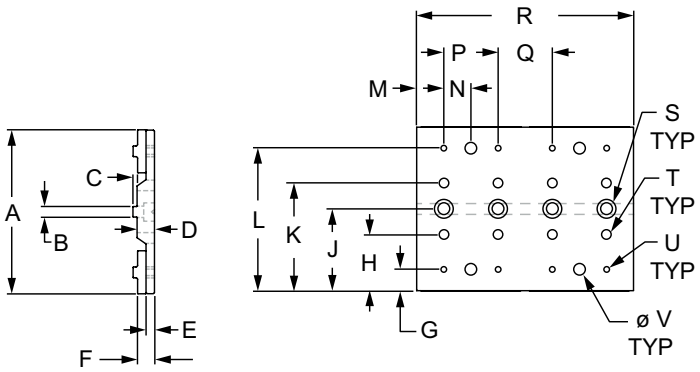

Part No.	Series	Color	A	B	C	D	E	F	G	H	J	K
6766	10	Clear	3.125"	.244"	.060"	.312"	.156"	.306"	.397"	1.063"	1.563"	2.063"
6766-Black	10	Black	3.125"	.244"	.060"	.312"	.156"	.306"	.397"	1.063"	1.563"	2.063"
6866	15	Clear	4.750"	.308"	.120"	.505"	.245"	.485"	.616"	1.625"	2.375"	3.125"
6866-Black	15	Black	4.750"	.308"	.120"	.505"	.245"	.485"	.616"	1.625"	2.375"	3.125"
25-6766	25	Clear	79.38mm	6.20mm	1.52mm	7.92mm	3.96mm	7.77mm	10.08mm	27.00mm	39.70mm	52.40mm
25-6766-Black	25	Black	79.38mm	6.20mm	1.52mm	7.92mm	3.96mm	7.77mm	10.08mm	27.00mm	39.70mm	52.40mm
40-6866	40	Clear	124.78mm	7.82mm	3.05mm	12.83mm	6.22mm	12.32mm	15.78mm	42.45mm	62.39mm	82.33mm
40-6866-Black	40	Black	124.78mm	7.82mm	3.05mm	12.83mm	6.22mm	12.32mm	15.78mm	42.45mm	62.39mm	82.33mm

		L	M	N	P	Q	R	S	T	U	V	Weight
6766	10	2.728"	.500"	.500"	1.000"	1.000"	4.000"	1/4-20 SHCS	1/4-20	8-32	.257"	.359 lb
6766-Black	10	2.728"	.500"	.500"	1.000"	1.000"	4.000"	1/4-20 SHCS	1/4-20	8-32	.257"	.359 lb
6866	15	4.134"	.750"	.750"	1.500"	1.500"	6.000"	5/16 SHCS	5/16-18	10-24	.328"	1.272 lb
6866-Black	15	4.134"	.750"	.750"	1.500"	1.500"	6.000"	5/16 SHCS	5/16-18	10-24	.328"	1.272 lb
25-6766	25	69.29mm	12.50mm	12.50mm	25.00mm	25.00mm	100.00mm	M6 SHCS	M6 x 1.0	8-32	6.30mm	.1641 kg
25-6766-Black	25	69.29mm	12.50mm	12.50mm	25.00mm	25.00mm	100.00mm	M6 SHCS	M6 x 1.0	8-32	6.30mm	.1641 kg
40-6866	40	109.00mm	20.00mm	20.00mm	40.00mm	40.00mm	160.00mm	M8 SHCS	M8 x 1.25	10-24	8.33mm	.5973 kg
40-6866-Black	40	109.00mm	20.00mm	20.00mm	40.00mm	40.00mm	160.00mm	M8 SHCS	M8 x 1.25	10-24	8.33mm	.5973 kg

Material Specifications

Material	Alloy*	Process	Finish
Aluminum	6005A – T61	Extrude	Anodize

* Or comparable

Included Hardware (Mount to T-Slot)

Series	Part No.	Qty.	Bolt	Part No.	Qty.	T-Nut
10	3058	4	1/4-20 x 3/8" SHCS	3280	2	Double Slide-in Economy
15	3110	4	5/16-18 x 5/8" SHCS	3279	2	Double Slide-in Economy
25	13-6508	4	M6 x 8mm SHCS	25-1962	2	Double Slide-in Economy
40	13-8516	4	M8 x 16mm SHCS	40-1982	2	Double Slide-in Economy

Bearings & Pivots

Short - Single Mount Unibearing™ Assembly

- Comprised of short single mount UniBearing™ attached to a T-slot profile
- Pre-tapped holes in profile ends and housing unit for connecting accessories
- Includes skim kits

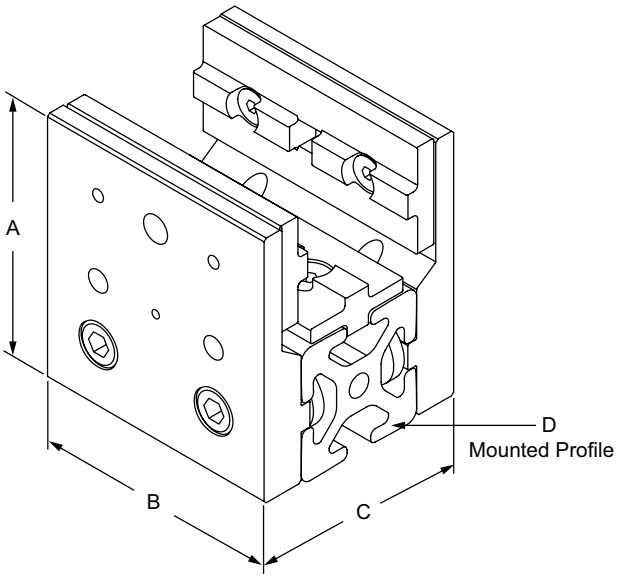

Fractional

Metric

Part No.	Series	Material	Alloy*	Finish	Process	Color	A	B	C	D	Weight
6730	10	Aluminum	6005A – T61	Anodize	Extrude	Clear	2.063"	1.875"	1.624"	1010	.378 lb
6730-Black	10					Black	2.063"	1.875"	1.624"	1010	.378 lb
6731	10					Clear	2.063"	1.875"	2.624"	1020	.467 lb
6731-Black	10					Black	2.063"	1.875"	2.624"	1020	.467 lb
6870	15					Clear	3.125"	2.812"	2.510"	1515	1.330 lb
6870-Black	15					Black	3.125"	2.812"	2.510"	1515	1.330 lb
6871	15					Clear	3.125"	2.812"	4.010"	1530	1.682 lb
6871-Black	15					Black	3.125"	2.812"	4.010"	1530	1.682 lb
6872	15					Clear	3.125"	2.812"	5.510"	1545	2.036 lb
6872-Black	15					Black	3.125"	2.812"	5.510"	1545	2.036 lb
25-6730	25					Clear	52.40mm	47.00mm	40.85mm	25-2525	.1600 kg
25-6730-Black	25					Black	52.40mm	47.00mm	40.85mm	25-2525	.1600 kg
25-6731	25					Clear	52.40mm	47.00mm	65.85mm	25-2550	.2070 kg
25-6731-Black	25					Black	52.40mm	47.00mm	65.85mm	25-2550	.2070 kg
40-6870	40					Clear	82.45mm	75.00mm	65.66mm	40-4040	.6550 kg
40-6870-Black	40					Black	82.45mm	75.00mm	65.66mm	40-4040	.6550 kg
40-6871	40					Clear	82.45mm	75.00mm	105.66mm	40-4080	.7919 kg
40-6871-Black	40					Black	82.45mm	75.00mm	105.66mm	40-4080	.7919 kg

* Or comparable

Included Hardware (Mount to T-Slot)

Series	Part No.	Qty.	Bolt	Part No.	Qty.	T-Nut
10	3058	4	1/4-20 x 3/8" SHCS	3280	2	Double Slide-in Economy
15	3110	4	5/16-18 x 5/8" SHCS	3279	2	Double Slide-in Economy
25	13-6508	4	M6 x 8mm SHCS	25-1962	2	Double Slide-in Economy
40	13-8516	4	M8 x 16mm SHCS	40-1982	2	Double Slide-in Economy

80/20 BUILD YOUR IDEA
More on 80/20® products available at 8020.net

Long - Single Mount Unibearing™ Assembly

- Comprised of short single mount UniBearing™ attached to a T-slot profile
- Pre-tapped holes in profile ends and housing unit for connecting accessories
- Includes skim kits

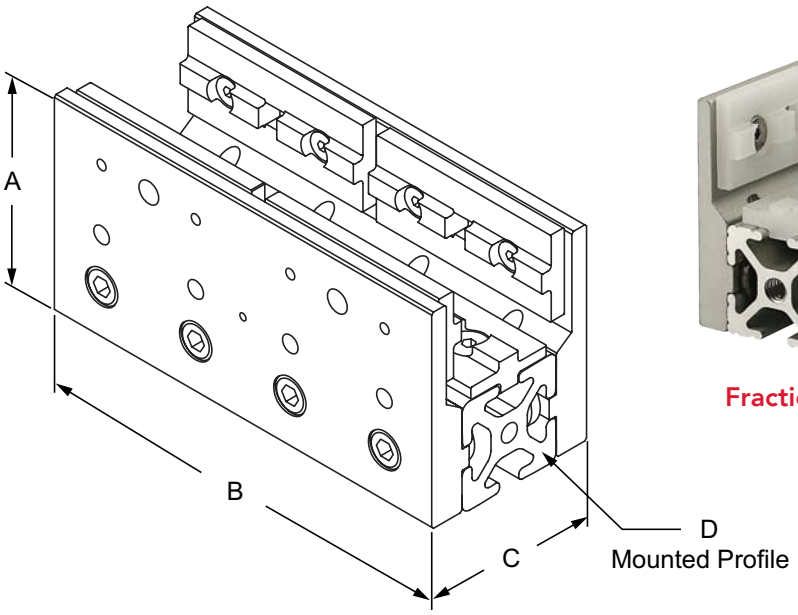

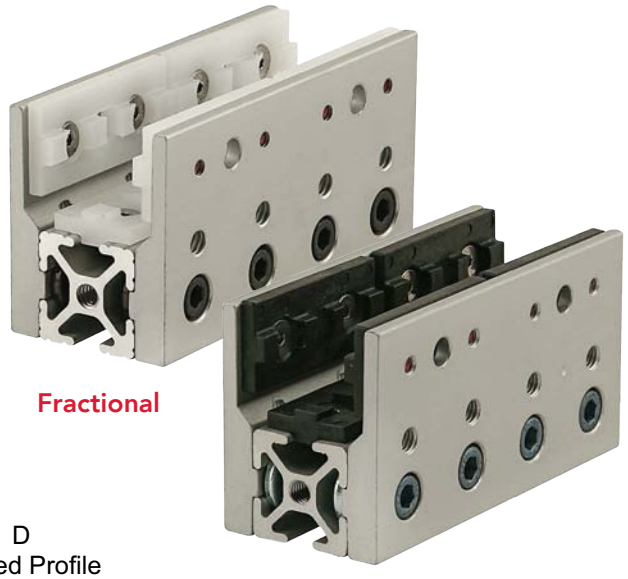

Fractional

Metric

Part No.	Series	Material	Alloy*	Finish	Process	Color	A	B	C	D	Weight
6732	10	Aluminum	6005A – T61	Anodize	Extrude	Clear	2.063"	4.000"	1.624"	1010	.771 lb
6732-Black	10					Black	2.063"	4.000"	1.624"	1010	.771 lb
6733	10					Clear	2.063"	4.000"	2.624"	1020	.969 lb
6733-Black	10					Black	2.063"	4.000"	2.624"	1020	.969 lb
6873	15					Clear	3.125"	6.000"	2.510"	1515	2.751 lb
6873-Black	15					Black	3.125"	6.000"	2.510"	1515	2.751 lb
6874	15					Clear	3.125"	6.000"	4.010"	1530	3.518 lb
6874-Black	15					Black	3.125"	6.000"	4.010"	1530	3.518 lb
6875	15					Clear	3.125"	6.000"	5.510"	1545	5.030 lb
6875-Black	15					Black	3.125"	6.000"	5.510"	1545	5.030 lb
25-6732	25					Clear	52.40mm	100.00mm	40.85mm	25-2525	.3394 kg
25-6732-Black	25					Black	52.40mm	100.00mm	40.85mm	25-2525	.3394 kg
25-6733	25					Clear	52.40mm	100.00mm	65.85mm	25-2550	.4277 kg
25-6733-Black	25					Black	52.40mm	100.00mm	65.85mm	25-2550	.4277 kg
40-6873	40					Clear	82.45mm	160.00mm	65.66mm	40-4040	1.3290 kg
40-6873-Black	40					Black	82.45mm	160.00mm	65.66mm	40-4040	1.3290 kg
40-6874	40					Clear	82.45mm	160.00mm	105.66mm	40-4080	1.6720 kg
40-6874-Black	40					Black	82.45mm	160.00mm	105.66mm	40-4080	1.6720 kg

* Or comparable

Included Hardware (Mount to T-Slot)

Series	Part No.	Qty.	Bolt	Part No.	Qty.	T-Nut
10	3058	8	1/4-20 x 3/8" SHCS	3280	4	Double Slide-in Economy
15	3110	8	5/16-18 x 5/8" SHCS	3279	4	Double Slide-in Economy
25	13-6508	8	M6 x 8mm SHCS	25-1962	4	Double Slide-in Economy
40	13-8516	8	M8 x 16mm SHCS	40-1982	4	Double Slide-in Economy

Bearings & Pivots

Short - Double Mount Unibearing™ Assembly

- Comprised of short single mount UniBearing™ attached to a T-slot profile
- Pre-tapped holes in profile ends and housing unit for connecting accessories
- Includes skim kits

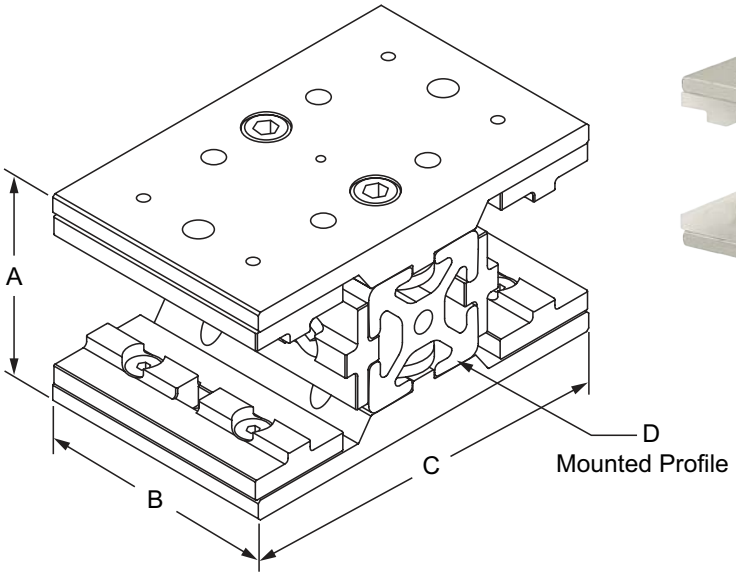

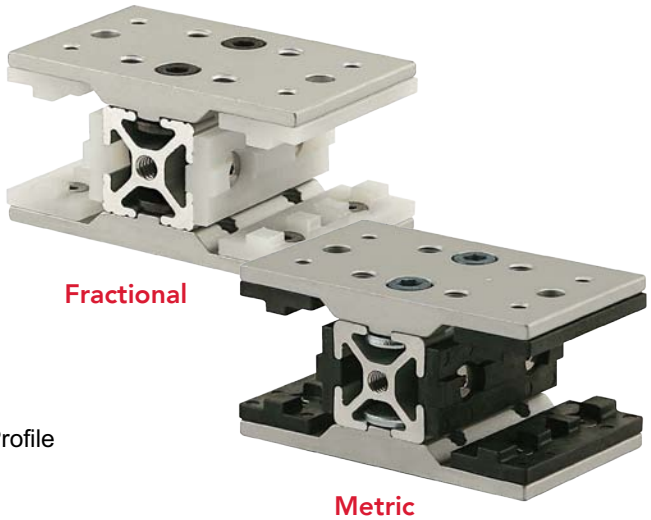

Part No.	Series	Material	Alloy*	Finish	Process	Color	A	B	C	D	Weight
6734	10	Aluminum	6005A – T61	Anodize	Extrude	Clear	1.624"	1.875"	3.125"	1010	.485 lb
6734-Black	10					Black	1.624"	1.875"	3.125"	1010	.485 lb
6735	10					Clear	2.624"	1.875"	3.125"	1020	.609 lb
6735-Black	10					Black	2.624"	1.875"	3.125"	1020	.609 lb
6876	15					Clear	2.510"	2.812"	4.750"	1515	1.791 lb
6876-Black	15					Black	2.510"	2.812"	4.750"	1515	1.791 lb
6877	15					Clear	4.010"	2.812"	4.750"	1530	1.860 lb
6877-Black	15					Black	4.010"	2.812"	4.750"	1530	1.860 lb
6878	15					Clear	5.510"	2.812"	4.750"	1545	2.196 lb
6878-Black	15					Black	5.510"	2.812"	4.750"	1545	2.196 lb
25-6734	25					Clear	40.85mm	47.00mm	79.38mm	25-2525	.2128 kg
25-6734-Black	25					Black	40.85mm	47.00mm	79.38mm	25-2525	.2128 kg
25-6735	25					Clear	65.85mm	47.00mm	79.38mm	25-2550	.2692 kg
25-6735-Black	25					Black	65.85mm	47.00mm	79.38mm	25-2550	.2692 kg
40-6876	40					Clear	65.66mm	75.00mm	124.78mm	40-4040	.9020 kg
40-6876-Black	40					Black	65.66mm	75.00mm	124.78mm	40-4040	.9020 kg
40-6877	40					Clear	105.66mm	75.00mm	124.78mm	40-4080	1.0970 kg
40-6877-Black	40					Black	105.66mm	75.00mm	124.78mm	40-4080	1.0970 kg

* Or comparable

Included Hardware (Mount to T-Slot)

Series	Part No.	Qty.	Bolt	Part No.	Qty.	T-Nut
10	3058	4	1/4-20 x 3/8" SHCS	3280	2	Double Slide-in Economy
15	3110	4	5/16-18 x 5/8" SHCS	3279	2	Double Slide-in Economy
25	13-6508	4	M6 x 8mm SHCS	25-1962	2	Double Slide-in Economy
40	13-8516	4	M8 x 16mm SHCS	40-1982	2	Double Slide-in Economy

80/20 BUILD YOUR IDEA
More on 80/20® products available at 8020.net

Long - Double Mount Unibearing™ Assembly

- Comprised of short single mount UniBearing™ attached to a T-slot profile
- Pre-tapped holes in profile ends and housing unit for connecting accessories
- Includes skim kits

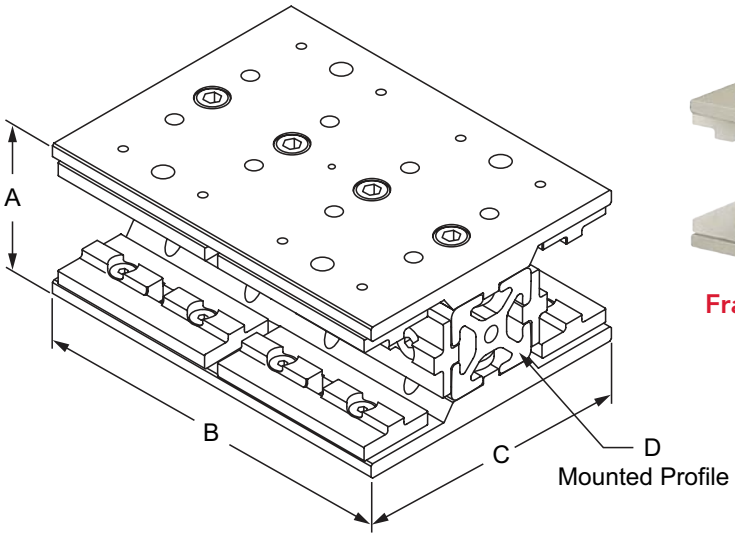

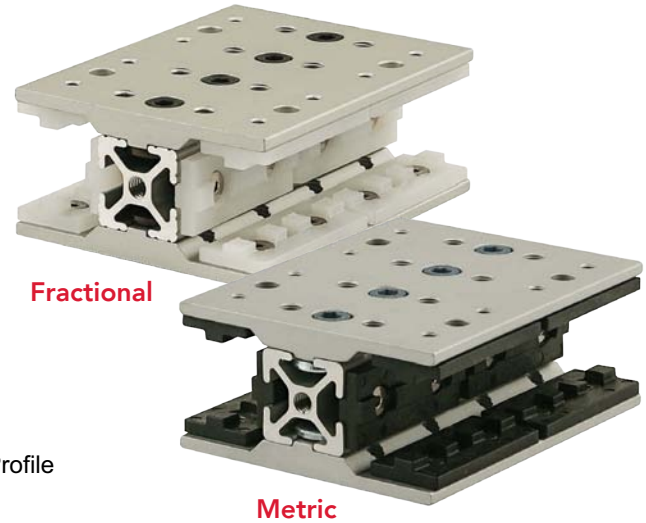

Part No.	Series	Material	Alloy*	Finish	Process	Color	A	B	C	D	Weight
6736	10	Aluminum	6005A – T61	Anodize	Extrude	Clear	1.624"	4.000"	3.125"	1010	1.033 lb
6736-Black	10					Black	1.624"	4.000"	3.125"	1010	1.033 lb
6737	10					Clear	2.624"	4.000"	3.125"	1020	1.301 lb
6737-Black	10					Black	2.624"	4.000"	3.125"	1020	1.301 lb
6879	15					Clear	2.510"	6.000"	4.750"	1515	3.608 lb
6879-Black	15					Black	2.510"	6.000"	4.750"	1515	3.608 lb
6883	15					Clear	4.010"	6.000"	4.750"	1530	4.568 lb
6883-Black	15					Black	4.010"	6.000"	4.750"	1530	4.568 lb
6884	15					Clear	5.510"	6.000"	4.750"	1545	5.577 lb
6884-Black	15					Black	5.510"	6.000"	4.750"	1545	5.577 lb
25-6736	25					Clear	40.85mm	100.00mm	79.38mm	25-2525	.4397 kg
25-6736-Black	25					Black	40.85mm	100.00mm	79.38mm	25-2525	.4397 kg
25-6737	25					Clear	65.85mm	100.00mm	79.38mm	25-2550	.5540 kg
25-6737-Black	25					Black	65.85mm	100.00mm	79.38mm	25-2550	.5540 kg
40-6879	40					Clear	65.66mm	160.00mm	124.78mm	40-4040	1.6780 kg
40-6879-Black	40					Black	65.66mm	160.00mm	124.78mm	40-4040	1.6780 kg
40-6883	40					Clear	105.66mm	160.00mm	124.78mm	40-4080	2.0825 kg
40-6883-Black	40					Black	105.66mm	160.00mm	124.78mm	40-4080	2.0825 kg

* Or comparable

Included Hardware (Mount to T-Slot)

Series	Part No.	Qty.	Bolt	Part No.	Qty.	T-Nut
10	3058	8	1/4-20 x 3/8" SHCS	3280	4	Double Slide-in Economy
15	3110	8	5/16-18 x 5/8" SHCS	3279	4	Double Slide-in Economy
25	13-6508	8	M6 x 8mm SHCS	25-1962	4	Double Slide-in Economy
40	13-8516	8	M8 x 16mm SHCS	40-1982	4	Double Slide-in Economy

Bearings & Pivots

Linear Bearing Brake Hole Specifications

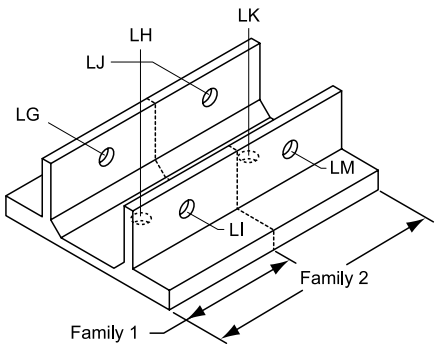

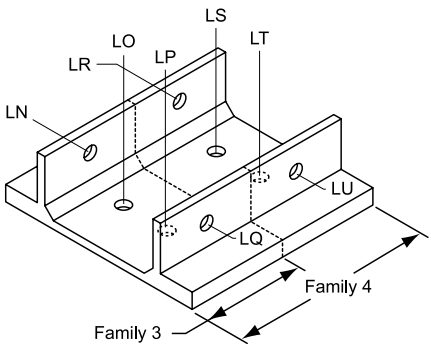

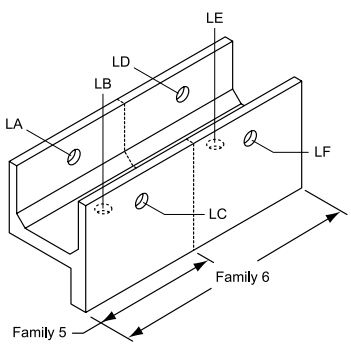

Part No.	Series	Description
7401	10	.265" diameter drill thru one wall
7400	15	.344" diameter drill thru one wall

Part No.	Series	Description
25-7401	25	6.73mm diameter drill thru one wall
40-7400	40	8.73mm diameter drill thru one wall

Series	Standard Bearing Part No.	Brake Ready Bearing Part No.	Series	Standard Bearing Part No.	Brake Ready Bearing Part No.	Bearing Size	Pre-Drilled or Specified Brake Hole Locations
10	6725	—	25	25-6725	—	Family 1	Specify*
15	6825	—	40	40-6825	—		
15	6835	—	40	40-6835	—		
10	—	6425	25	—	25-6425		LG / LH / LI
15	—	6525	40	—	40-6525		
15	—	6535	40	—	40-6535		
—	—	—	45	—	45-6525		
10	6726	—	25	25-6726	—	Family 2	Specify*
15	6826	—	40	40-6826	—		
15	6836	—	40	40-6836	—		
10	—	6426	25	—	25-6426		LG / LH / LI / LJ / LK / LM
15	—	6526	40	—	40-6526		
15	—	6536	40	—	40-6536		
—	—	—	45	—	45-6526		
10	6723	—	25	25-6723	—	Family 3	Specify*
15	6823	—	40	40-6823	—		
15	6833	—	40	40-6833	—		
10	—	6423	25	—	25-6423		LN / LO / LP / LQ
15	—	6523	40	—	40-6523		
15	—	6533	40	—	40-6533		
10	6724	—	25	25-6724	—	Family 4	Specify*
15	6824	—	40	40-6824	—		
15	6834	—	40	40-6834	—		
10	—	6424	25	—	25-6424		LN / LO / LP / LQ / LR / LS / LT / LU
15	—	6524	40	—	40-6524		
15	—	6534	40	—	40-6534		
10	6715	—	25	25-6715	—	Family 5	Specify*
15	6815	—	40	40-6815	—		
15	6830	—	40	40-6830	—		
10	—	6415	25	—	25-6415		LA / LB / LC
15	—	6515	40	—	40-6515		
15	—	6530	40	—	40-6530		
10	6716	—	25	25-6716	—	Family 6	Specify*
15	6816	—	40	40-6816	—		
15	6831	—	40	40-6831	—		
10	—	6416	25	—	25-6416		LA / LB / LC / LD / LE / LF
15	—	6516	40	—	40-6516		
15	—	6531	40	—	40-6531		

* Refer to pages 10-23 and 10-24 for machining services

80/20 BUILD YOUR IDEA
More on 80/20® products available at 8020.net

Engineering Specifications on UHMW-PE Bearing Pads

Property	Test Method	Unit	Typical Value
Specific Gravity	ASTM D-792	g/cm3	0.94
Yield Strength @ 73°F	ASTM D-638	p.s.i.	3400
Ultimate Tensile Strength @ 73°F	ASTM D-638	p.s.i.	6800
Break Elongation @ 73°F	ASTM D-638	%	450
Yield Strength @ 250°F	Stress Strain Diagram	p.s.i.	700
Ultimate Tensile Strength @ 250°F	Stress Strain Diagram	p.s.i.	3300
Break Elongation @ 250°F	Stress Strain Diagram	%	900
Hardness - Rockwell "R" Scale	ASTM D-785	-	64
- Shore "D" Scale	ASTM D-2240	-	67
Flexural Modulus of Elasticity	Bend Creep/1 min. value	p.s.i.	110,000
Shear Strength	ASTM D-732	p.s.i.	3500
Izod Impact @ + 23°C	ASTM D-256A	ft-lbs/in. notch	No break
@ - 140° C	ASTM D-256A	ft-lbs/in. notch	No break
Environmental Stress Cracking @ F50	ASTM D-1693 Mod	hrs.	6000
Water Absorption	ASTM D-570	-	NIL

Abrasive Resistance - Sand Slurry Test

- **Each material listed below was rotated 24 hours @ 1750 r.p.m.**
- **Carbon Steel = abrasive rating of 100.**
- **The weight loss for each material is relative to 100.**
- **The lower the figure, the better the abrasive resistance.**
- **50-50 sand/water slurry.**

Material	Rating
UHMW-PE	15
Nylon	31
High MW polyethylene	44
TFE	72
Stainless steel	84
Polypropylene	87
Polycarbonate	96
Hi carbon steel	100
Polyacetal	110
TFE/glass fiber	113
Normal MW polyethylene	125
Phosphor bronze	193
Yellow brass	409
Phenolic laminate	571
Hickory wood	967

Coefficient of Friction

UHMW-PE polymer has a lower coefficient of friction than glass. Its self-lubricating characteristics make it an ideal material for bearings, bushings, valves, wear strips, or any application where sliding contact is encountered.

Materials	Static	Kinetic	Test Method
Aluminum* vs. UHMW-PE	0.12	0.016	ASTM D-1894
Mild Steel vs. Mild Steel	0.30 - 0.40	0.25 - 0.35	
Mild Steel vs. UHMW-PE	0.15 - 0.20	0.12 - 0.20	
UHMW-PE vs. UHMW-PE	0.20 - 0.30	0.20 - 0.30	

*Anodized 204 R1 Spec on extruded aluminum

Comparison of Dynamic Coefficient of Friction on Polished Steel

Property	UHMW-PE
Dry	0.10 - 0.22
Water	0.05 - 0.10
Oil	0.05 - 0.08

FDA and USDA Approved

Bearings & Pivots

Load Bearing Properties of UHMW-PE

Torsional Rigidity As A Function Of Temperature
(Measured On Compression - Molded Sheets)

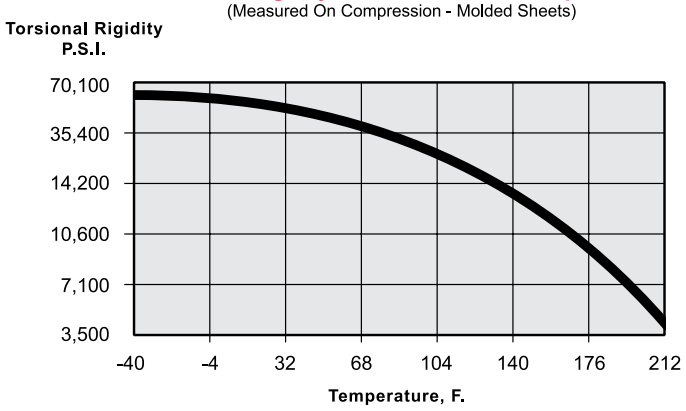

Tensile Strength At The Yield Point As A Function Of Temperature
(Measured At The Feed Rate Of 3.9 in. / min.)

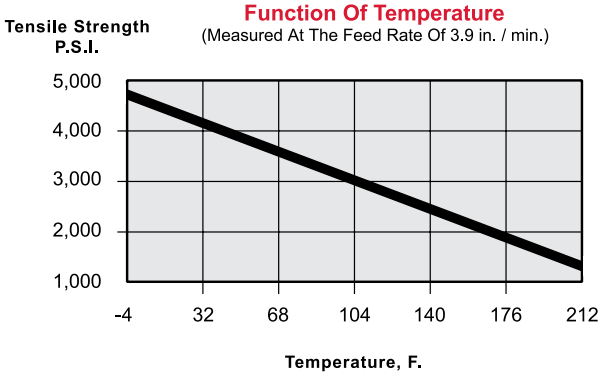

Stress - Strain At Various Temperatures
(Measured At The Feed Rate Of 1 in. / min.)

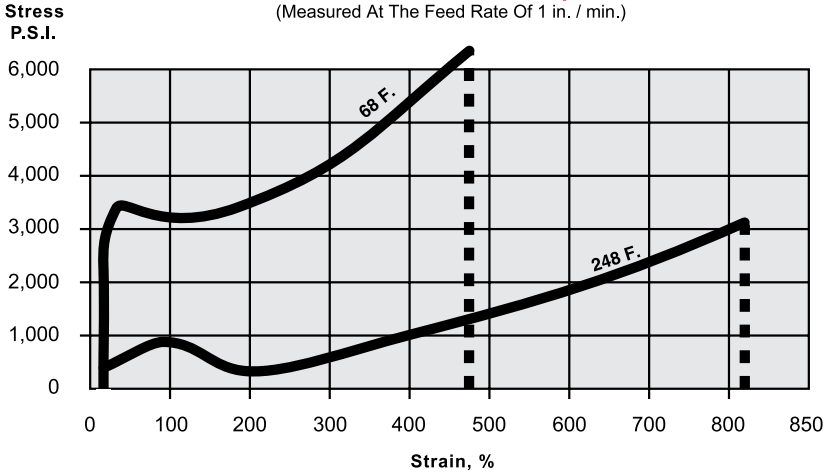

Flexural Modulus Of Elasticity As A Function Of Load Time
(Measured By The Bending Creep Test With A Constant Bending Stress Of 425 P.S.I.)

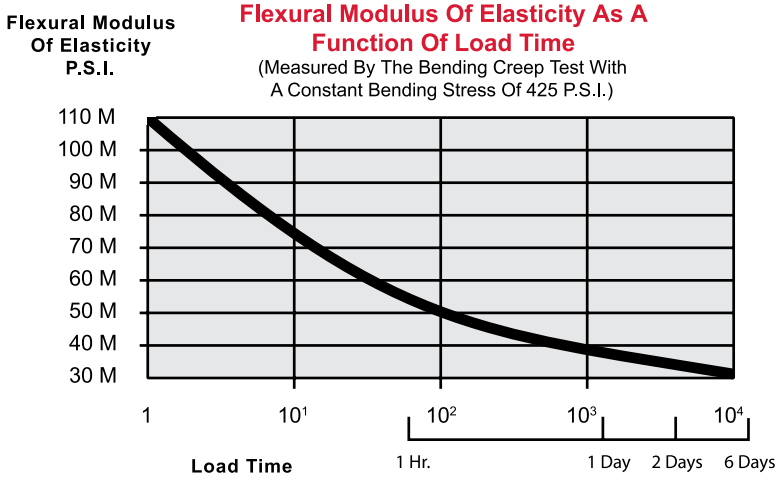

80/20 BUILD YOUR IDEA
More on 80/20® products available at 8020.net

Chemical Resistance of UHMW-PE

TEST SPECIMENS	Dumb-bell type
DURATION OF TEST	30 Days
+ = RESISTANT	Mechanical properties not appreciably affected
/ = LIMITED RESISTANT	Decreases in yield stress and ultimate tensile strength less than 20%
- = NOT RESISTANT	Decreases in yield stress and ultimate tensile strength greater than 20%

Reagent	Temperatures		
	20°C	50°C	80°C
I. Inorganic acids			
Chromic acid (80%)	+	+	/
Hydrychloric acid (conc.)	+	+	+
Hydrocyanic acid	+	+	
Hydrofluoric acid	-	-	-
Nitric acid (conc.)	/	-	
Nitric acid (50%)	+	+	/
Nitric acid (20%)	+	+	+
Phosphoric acid (85%)	+	-	-
Sulphuric acid (conc.)	+	-	-
Sulphuric acid (50%)	+	+	+
II. Alkalis			
Aqueous ammonia	+	+	
Potassium hydroxide solution	+	+	+
Sodium hydroxide solution	+	+	+
III. Aqueous solutions of inorganic salts			
Aluminum chloride	+	+	+
Ammonium nitrate	+	+	+
Bleaching powder	+	+	+
Calcium chloride	+	+	+
Sodium carbonate	+	+	+
Sodium chloride	+	+	+
Sodium hypochlorite	+	+	+
Zinc chloride	+	+	+
IV. Organic acids			
Acetic acid (99%)	+	+	/
Acetic acid (10%)	+	+	+
Butyric acid	+	+	
Citric acid	+	+	+
Formic acid	+	+	
Oleic acid	+	+	/

Reagent	Temperatures		
	20°C	50°C	80°C
V. Hydrocarbons and halogenated hydrocarbons			
Benzene	/	/	
Carbon tetrachloride	/		
Cyclohexane	+	+	
Dichloroethylene	-	-	
Diesel oil	+	+	/
n-Heptane	+	+	
Petroleum ether	+		
Trichloroethylene	/	-	
Toluene	/	-	
White spirit	+	/	
Xylene	/	/	-
VI. Alcohols, Ketones, Ester, and Amines			
Acetone	+	+	
Aniline	+	+	/
Benzyl alcohol	+	+	+
Butyl alcohol	+	+	+
Cyclohexanol	+	+	+
Ethanol	+	+	
Ethyl acetate	+	+	
Ethylene glycol	+	+	+
Glycerine	+	+	+
Lauryl alcohol	+	+	+
Propyl alcohol	+	+	+
VII. Miscellaneous			
Beer	+	+	+
Detergents in aqueous solution	+	+	+
Distilled water	+	+	+
Hydrogen peroxide 30% (perhydrol)	+	+	
Linseed oil	+	+	+
Milk	+	+	+
Olive oil	+	+	+
Sea water	+	+	+
Wine	+	+	+

Because we cannot anticipate or control the many different conditions under which our products may be used, the product information contained in this catalog should be viewed as general guidelines only and not as a recommendation to use our products in any particular situation. Although we believe that all information contained herein is reliable, certain information in this catalog may have been obtained from test results published by other parties, and consequently, we cannot guarantee the accuracy of all information contained in this catalog. In addition, particular conditions of use and reasonable lot-to-lot variations can affect performance. Users of our products should perform their own tests to determine the suitability of any product for their particular purposes.

Bearings & Pivots

Single-Keyed Standard Linear Bearing Pad

- Used with bearings to create linear motion
- Low coefficient of friction; rounded corners
- Holes for mounting hardware and brake kits

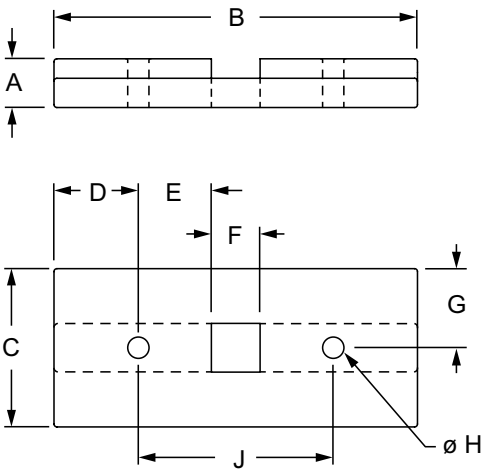

Part No.	Series	A	B	C	D	E	F	G	H	J	K	L	M	Weight
6490	10	.250"	1.865"	.812"	.433"	.375"	.250"	.406"	.109"	1.000"	.150"	.283"	.246"	.008 lb
6491	10	.250"	1.865"	.812"	.433"	.375"	.250"	.406"	.109"	1.000"	.150"	.283"	.246"	.008 lb
6590	15	.375"	2.770"	1.250"	.635"	.594"	.312"	.625"	.125"	1.500"	.243"	.469"	.312"	.029 lb
6591	15	.375"	2.770"	1.250"	.635"	.594"	.312"	.625"	.125"	1.500"	.243"	.469"	.312"	.029 lb
25-6490	25	6.35mm	46.69mm	20.62mm	10.84mm	9.33mm	6.35mm	10.31mm	2.77mm	25.00mm	3.81mm	7.19mm	6.25mm	.0036 kg
25-6491	25	6.35mm	46.69mm	20.62mm	10.84mm	9.33mm	6.35mm	10.31mm	2.77mm	25.00mm	3.81mm	7.19mm	6.25mm	.0035 kg
40-6590	40	9.53mm	74.12mm	31.75mm	17.06mm	16.04mm	7.92mm	15.88mm	3.18mm	40.00mm	6.17mm	11.91mm	7.92mm	.0140 kg
40-6591	40	9.53mm	74.12mm	31.75mm	17.06mm	16.04mm	7.92mm	15.88mm	3.18mm	40.00mm	6.17mm	11.91mm	7.92mm	.0145 kg

Material Specifications

Part No.	Material	Process	Finish	Color
6490	UHMW PE	Injection Molding	Smooth	White
6491				Black
6590				White
6591				Black
25-6490				White
25-6491				Black
40-6590				Natural
40-6591				Black

Suggested Hardware (Mount Pad to Bearing Housing)

Part No.	Series	Qty.	Bolt
3625	10	2	#8 x 3/8" Bearing Pad Screw
3628	15	2	#10 x 5/8" Bearing Pad Screw
25-3625	25	2	#8 x 3/8" Bearing Pad Screw
40-3628	40	2	#10 x 5/8" Bearing Pad Screw

80/20 BUILD YOUR IDEA
More on 80/20® products available at 8020.net

Single-Keyed High-Cycle Linear Bearing Pad

- Ideal for quick acceleration and deceleration linear motion applications; low coefficient of friction
- Rounded corners; mounts to housing with steel flathead socket cap screw that have Loctite®.
- Holes for mounting hardware and brake kits

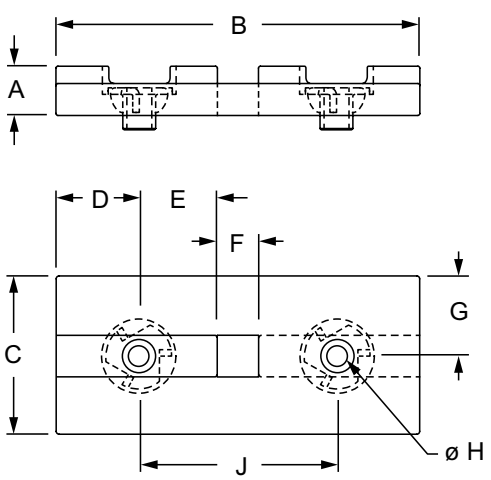

Part No.	Series	A	B	C	D	E	F	G	H	J	K	L	M	N	Weight
6595	15	.375"	2.770"	1.250"	.635"	.594"	.312"	.625"	10-32	1.500"	.243"	.469"	.312"	.484"	.033 lb
6596	15	.375"	2.770"	1.250"	.635"	.594"	.312"	.625"	10-32	1.500"	.243"	.469"	.312"	.484"	.032 lb
40-6595	40	9.53mm	74.12mm	31.75mm	17.06mm	16.04mm	7.92mm	15.88mm	10-32	40.00mm	6.17mm	11.91mm	7.92mm	12.29mm	.0159 kg
40-6596	40	9.53mm	74.12mm	31.75mm	17.06mm	16.04mm	7.92mm	15.88mm	10-32	40.00mm	6.17mm	11.91mm	7.92mm	12.29mm	.0158 kg
45-6598	45	10.77mm	78.00mm	39.00mm	16.50mm	17.50mm	10.00mm	19.50mm	10-32	45.00mm	6.17mm	14.63mm	9.75mm	12.29mm	.0168 kg

Material Specifications

Part No.	Material	Process	Finish	Color
6595	UHMW PE	Injection Molding	Smooth	White
6596				Black
40-6595				Natural
40-6596				Black
45-6598				Black

Suggested Hardware (Mount Pad to Bearing Housing)

Part No.	Series	Qty.	Bolt
3022	15 40 45	2	10-32 x 1/2" FHSCS

Bearings & Pivots

T-Slot Insert Linear Bearing Pad

- Used with bearings to create linear motion
- Low coefficient of friction; rounded corners
- Holes for mounting hardware and brake kits

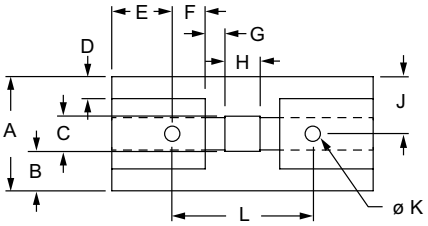

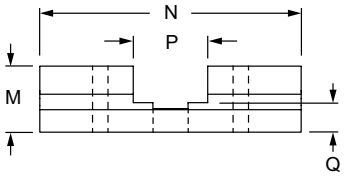

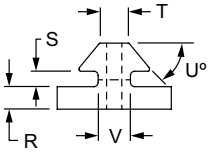

Part No.	Series	Color	A	B	C	D	E	F	G	H	J	K
6797	10	Natural	.812"	—	—	.156"	.430"	—	—	—	.406"	.109"
6798	10		.812"	.281"	.250"	.156"	.430"	.235"	.140"	.250"	.406"	.109"
6897	15		1.250"	—	—	.365"	.656"	—	—	—	.625"	.125"
6898	15		1.250"	.469"	.312"	.365"	.656"	.369"	.219"	.312"	.625"	.125"
25-6797	25		20.62mm	—	—	6.35mm	10.85mm	—	—	—	10.31mm	2.77mm
25-6798	25		20.62mm	7.14mm	6.35mm	6.35mm	10.85mm	5.77mm	3.56mm	6.35mm	10.31mm	2.77mm
40-6897	40		31.75mm	—	—	9.27mm	17.30mm	—	—	—	15.88mm	3.18mm
40-6898	40		31.75mm	11.91mm	7.92mm	9.27mm	17.30mm	10.49mm	5.55mm	7.92mm	15.88mm	3.18mm

Part No.	Series	L	M	N	P	Q	R	S	T	U	V	Weight
6797	10	1.000"	.470"	1.860"	—	.210"	.160"	.110"	.200"	50°	.230"	.013 lb
6798	10	1.000"	.470"	1.860"	.530"	.210"	.160"	.110"	.200"	50°	.230"	.012 lb
6897	15	1.500"	.700"	2.800"	—	.360"	.240"	.195"	.300"	45°	.300"	.046 lb
6898	15	1.500"	.700"	2.800"	.750"	.360"	.240"	.195"	.300"	45°	.300"	.040 lb
25-6797	25	25.00mm	11.94mm	46.69mm	—	5.33mm	4.06mm	2.79mm	5.08mm	50°	5.84mm	.0058 kg
25-6798	25	25.00mm	11.94mm	46.69mm	13.46mm	5.33mm	4.06mm	2.79mm	5.08mm	50°	5.84mm	.0063 kg
40-6897	40	40.00mm	17.78mm	75.00mm	—	9.14mm	6.10mm	4.95mm	7.62mm	45°	7.62mm	.0222 kg
40-6898	40	40.00mm	17.78mm	75.00mm	19.05mm	9.14mm	6.10mm	4.95mm	7.62mm	45°	7.62mm	.0195 kg

Material Specifications

Material	Process	Finish
UHMW PE	Extruded	Smooth

Suggested Hardware (Mount Pad to Bearing Housing)

Part No.	Series	Qty.	Bolt
3625	10	2	#8 x 3/8" Bearing Pad Screw
3628	15	2	#10 x 5/8" Bearing Pad Screw
25-3625	25	2	#8 x 3/8" Bearing Pad Screw
40-3628	40	2	#10 x 5/8" Bearing Pad Screw

80/20 BUILD YOUR IDEA
More on 80/20® products available at 8020.net

Single-Keyed UniBearing™ Pad

- Used with a UniBearing™ to create custom bearings
- Rounded corners; mounts to housing with steel flathead socket cap screw that have Loctite®.
- Holes for mounting hardware and brake kits

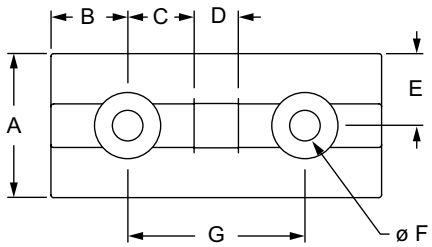

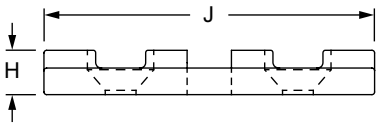

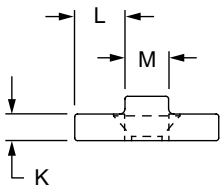

Part No.	Series	Color	A	B	C	D	E	F	G	H	J	K	L	M	Weight
6705	10	White	.812"	.433"	.375"	.246"	.406"	.172"	1.000"	.250"	1.865"	.150"	.283"	.246"	.012 lb
6706	10	Black	.812"	.433"	.375"	.246"	.406"	.172"	1.000"	.250"	1.865"	.150"	.283"	.246"	.012 lb
6814	15	White	1.250"	.635"	.594"	.312"	.625"	.193"	1.500"	.375"	2.770"	.243"	.469"	.312"	.035 lb
6817	15	Black	1.250"	.635"	.594"	.312"	.625"	.193"	1.500"	.375"	2.770"	.243"	.469"	.312"	.035 lb
25-6705	25	White	20.62mm	10.84mm	9.33mm	6.25mm	10.31mm	4.37mm	25.00mm	6.35mm	46.69mm	3.81mm	7.19mm	6.25mm	.0054 kg
25-6706	25	Black	20.62mm	10.84mm	9.33mm	6.25mm	10.31mm	4.37mm	25.00mm	6.35mm	46.69mm	3.81mm	7.19mm	6.25mm	.0054 kg
40-6814	40	Natural	31.75mm	17.06mm	16.04mm	7.92mm	15.88mm	4.90mm	40.00mm	9.53mm	74.12mm	6.17mm	11.91mm	7.92mm	.0172 kg
40-6817	40	Black	31.75mm	17.06mm	16.04mm	7.92mm	15.88mm	4.90mm	40.00mm	9.53mm	74.12mm	6.17mm	11.91mm	7.92mm	.0172 kg

Material Specifications

Part No.	Material	Process	Finish
6705	UHMW PE	Injection Molding	Smooth
6706			
6814			
6817			
25-6705			
25-6706			
40-6814			
40-6817			

Included Hardware (Mount Pad to Bearing Housing)

Part No.	Series	Qty.	Bolt
3649*	10 25	2	SS 8-32 x 1/4" FHSCS
3650*	15 40	2	SS 10-24 x 3/8" FHSCS

*Stainless steel (SS) hardware included.

Bearings & Pivots

Double-Keyed UniBearing™ Pad

- Used with a UniBearing™ to create custom bearings
- Rounded corners; mounts to housing with steel flathead socket cap screw

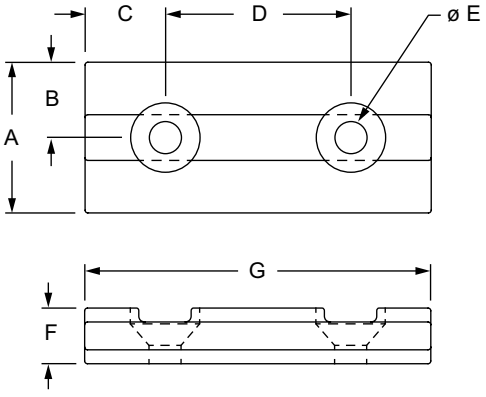

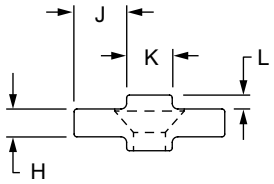

Part No.	Series	Color	A	B	C	D	E	F	G	H	J	K	L	Weight
6792	10	White	.812"	.406"	.433"	1.000"	.172"	.300"	1.865"	.150"	.283"	.246"	.075"	.028 lb
6793	10	Black	.812"	.406"	.433"	1.000"	.172"	.300"	1.865"	.150"	.283"	.246"	.075"	.029 lb
6892	15	White	1.250"	.625"	.635"	1.500"	.258"	.513"	2.770"	.243"	.469"	.312"	.135"	.112 lb
6893	15	Black	1.250"	.625"	.635"	1.500"	.258"	.513"	2.770"	.243"	.469"	.312"	.135"	.112 lb
25-6792	25	White	20.62mm	10.31mm	10.98mm	25.40mm	4.37mm	7.62mm	47.37mm	3.81mm	7.19mm	6.25mm	1.91mm	.0127 kg
25-6793	25	Black	20.62mm	10.31mm	10.98mm	25.40mm	4.37mm	7.62mm	47.37mm	3.81mm	7.19mm	6.25mm	1.91mm	.0127 kg
40-6892	40	Natural	31.75mm	15.88mm	17.06mm	40.00mm	6.55mm	13.03mm	74.12mm	6.17mm	11.91mm	7.92mm	3.43mm	.0326 kg
40-6893	40	Black	31.75mm	15.88mm	17.06mm	40.00mm	6.55mm	13.03mm	74.12mm	6.17mm	11.91mm	7.92mm	3.43mm	.0317 kg

Material Specifications

Part No.	Material	Process	Finish
6792	UHMW PE	Injection Molding	Smooth
6793			
6892			
6893			
25-6792			
25-6793			
40-6892			
40-6893			

Included Hardware (Mount Pad to Profile)

Series	Qty.	Bolt	Qty.	T-Nut
10 25	2	673003*	1	3281
15	2	206701*	1	3263
40	2	206701*	2	3686*

*Stainless steel (SS) hardware included.

80/20 BUILD YOUR IDEA
More on 80/20® products available at 8020.net

Single-Keyed Standard Bearing Pad Profile

- Profile can be cut to desired length
- Low coefficient of friction
- Cut-to-length machining service (pg. 10-2)

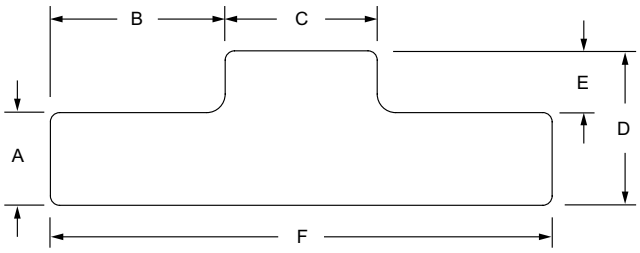

Part No.	Series	Color	A	B	C	D	E	F	Stock Length	Weight
6700	10	Natural	.150"	.283"	.246"	.250"	.100"	.812"	145"	.004 lb / ft
6701	10	Black	.150"	.283"	.246"	.250"	.100"	.812"	145"	.004 lb / ft
6810	15	Natural	.243"	.469"	.312"	.375"	.132"	1.250"	145"	.011 lb / ft
6811	15	Black	.243"	.469"	.312"	.375"	.132"	1.250"	145"	.011 lb / ft
25-6700	25	Natural	3.81mm	7.19mm	6.25mm	6.35mm	2.54mm	20.62mm	3.683 M	.0021 kg / m
25-6701	25	Black	3.81mm	7.19mm	6.25mm	6.35mm	2.54mm	20.62mm	3.683 M	.0021 kg / m
40-6810	40	Natural	6.17mm	11.91mm	7.92mm	9.53mm	3.35mm	31.75mm	3.683 M	.0051 kg / m
40-6811	40	Black	6.17mm	11.91mm	7.92mm	9.53mm	3.35mm	31.75mm	3.683 M	.0051 kg / m

Material Specifications

Material	Process	Finish
UHMW PE	Extruded	Smooth

Required Machining Services

Machining Type	Machined	Reference Page
Cut to Length	Bearing Pad Profile	10-2

Bearings & Pivots

Double-Keyed Standard Bearing Pad Profile

- Profile can be cut to desired length
- Low coefficient of friction
- Cut-to-length machining service (pg. 10-2)

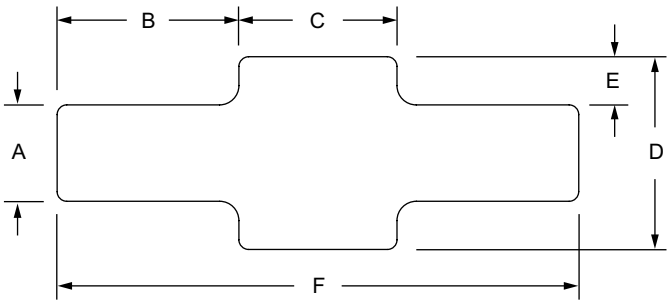

Part No.	Series	Color	A	B	C	D	E	F	Stock Length	Weight
6702	10	Natural	.150"	.283"	.246"	.300"	.075"	.812"	145"	.053 lb / ft
6703	10	Black	.150"	.283"	.246"	.300"	.075"	.812"	145"	.053 lb / ft
6812	15	Natural	.243"	.469"	.312"	.493"	.125"	1.250"	145"	.125 lb / ft
6813	15	Black	.243"	.469"	.312"	.493"	.125"	1.250"	145"	.125 lb / ft
25-6702	25	Natural	3.81mm	7.19mm	6.25mm	7.62mm	1.91mm	20.62mm	3.683 M	.0024 kg / m
25-6703	25	Black	3.81mm	7.19mm	6.25mm	7.62mm	1.91mm	20.62mm	3.683 M	.0024 kg / m
40-6812	40	Natural	6.17mm	11.91mm	7.92mm	12.52mm	3.18mm	31.75mm	3.683 M	.0056 kg / m
40-6813	40	Black	6.17mm	11.91mm	7.92mm	12.52mm	3.18mm	31.75mm	3.683 M	.0056 kg / m

Material Specifications

Material	Process	Finish
UHMW PE	Extruded	Smooth

Required Machining Services

Machining Type	Machined	Reference Page
Cut to Length	Bearing Pad Profile	10-2

80/20 BUILD YOUR IDEA
More on 80/20® products available at 8020.net

Linear Bearing Shim Stock

- Used to create a precise fit in linear bearings
- By loosening the bearing pad, shim(s) slide between pad and housing
- Sold in packs of 10

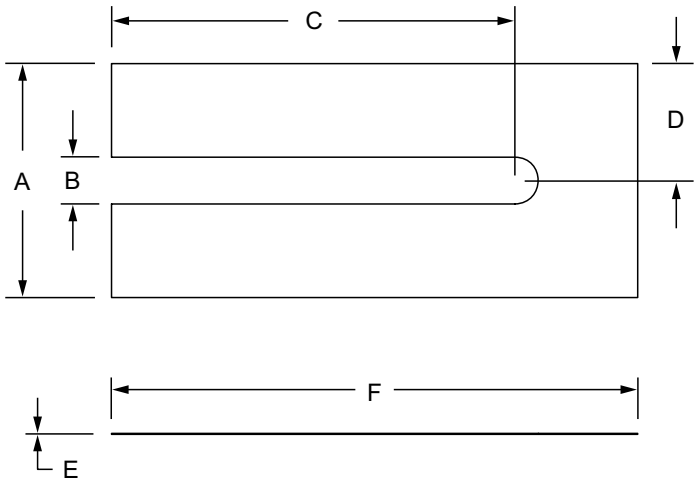

Part No.	Series	Material	Process	Color	A	B	C	D	E	F	Weight
6780	10	Mylar	Stamped	Clear	.812"	.175"	1.500"	.406"	.005"	1.875"	.004 lb
6782	10				.812"	.175"	1.500"	.406"	.005"	1.875"	.004 lb
6881	15				1.250"	.250"	2.156"	.625"	.005"	2.812"	.011 lb
6882	15				1.250"	.250"	2.156"	.625"	.005"	2.812"	.011 lb
25-6780	25				20.62mm	4.44mm	38.10mm	10.31mm	.13mm	47.63mm	.0020 kg
25-6782	25				20.62mm	4.44mm	38.10mm	10.31mm	.13mm	47.63mm	.0020 kg
40-6881	40				31.75mm	6.35mm	54.76mm	15.88mm	.13mm	71.42mm	.0051kg
40-6882	40				31.75mm	6.35mm	54.76mm	15.88mm	.13mm	71.42mm	.0051kg
45-6880	45				36.00mm	8.00mm	66.50mm	18.00mm	.08mm	80.00mm	.0036kg

Bearings & Pivots

"L" Handle Linear Bearing Brake Kit

- Adds grip to aid with adjustments with brake-ready bearing and secures it into semi-permanent position
- Includes mounting hardware

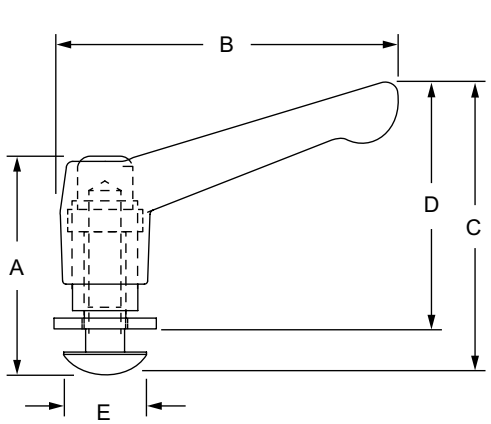

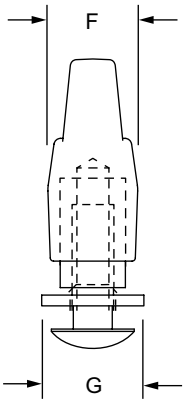

Part No.	Series	Material	Process	Finish	Color	A	B	C	D	E	F	G	Weight
6850	10	Nylon 66	Injection Mold	Matte	Black	1.325"	2.041"	1.745"	1.445"	.500"	.540"	.617"	.048 lb
6800	15	Zinc	Die Cast	Gloss	Gray	2.234"	3.505"	2.985"	2.235"	.703"	.871"	.688"	.336 lb
6805	15	Zinc	Die Cast	Gloss	Blue	2.234"	3.505"	2.985"	2.235"	.703"	.871"	.688"	.336 lb
6806	15	Zinc	Die Cast	Gloss	Red	2.234"	3.505"	2.985"	2.235"	.703"	.871"	.688"	.336 lb
6807	15	Zinc	Die Cast	Gloss	Yellow	2.234"	3.505"	2.985"	2.235"	.703"	.871"	.688"	.336 lb
25-6850	25	Nylon 66	Injection Mold	Matte	Black	33.66mm	51.84mm	44.32mm	36.70mm	12.70mm	13.72mm	15.67mm	.0277 kg
40-6800	40	Zinc	Die Cast	Gloss	Gray	56.74mm	89.03mm	75.82mm	56.77mm	17.86mm	22.12mm	17.48mm	.1524 kg
40-6805	40	Zinc	Die Cast	Gloss	Blue	56.74mm	89.03mm	75.82mm	56.77mm	17.86mm	22.12mm	17.48mm	.1524 kg
40-6806	40	Zinc	Die Cast	Gloss	Red	56.74mm	89.03mm	75.82mm	56.77mm	17.86mm	22.12mm	17.48mm	.1524 kg
40-6807	40	Zinc	Die Cast	Gloss	Yellow	56.74mm	89.03mm	75.82mm	56.77mm	17.86mm	22.12mm	17.48mm	.1524 kg
45-6800*	45	Zinc	Die Cast	Gloss	Gray	56.74mm	89.03mm	75.82mm	56.77mm	19.40mm	22.12mm	19.00mm	.1524 kg

*Includes drop-in t-nut Part No. 13173

80/20 BUILD YOUR IDEA
More on 80/20® products available at 8020.net

"T" Handle Linear Bearing Brake Kit

- Adds grip to aid with adjustments with brake-ready bearing and secures it into semi-permanent position
- Includes mounting hardware

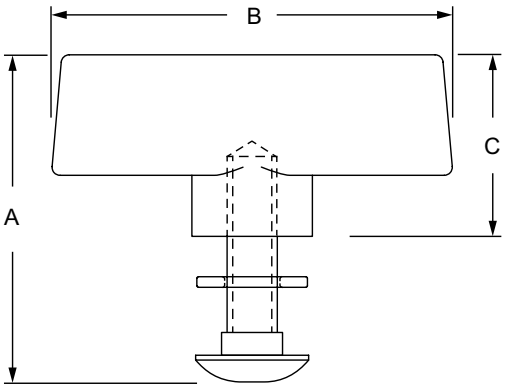

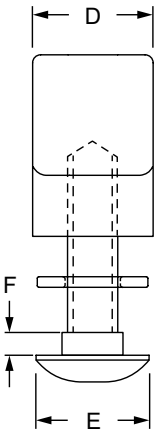

Part No.	Series	Material	Finish	Color	A	B	C	D	E	F	Weight
6801	15	Steel / Polyproylene	Zinc / Matte	Black	2.036"	2.491"	1.250"	.750"	.703"	.150"	.091 lb
40-6801	40				51.71mm	63.27mm	31.75mm	19.05mm	17.86mm	3.81mm	.0413 kg

Star Handle Linear Bearing Brake Kit

- Adds grip to aid with adjustments with brake-ready bearing and secures it into semi-permanent position
- Includes mounting hardware

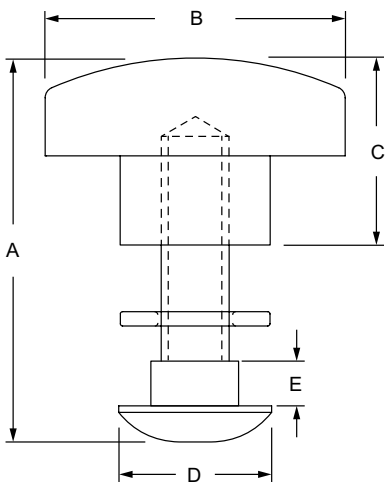

Part No.	Series	Material	Finish	Color	A	B	C	D	E	Weight
6802	15	Steel / Polypropylene	Zinc / Texture	Black	1.766"	1.380"	.860"	.703"	.150"	.069 lb
40-6802	40				44.86mm	35.05mm	21.84mm	17.86mm	3.81mm	.0312 kg

Bearings & Pivots

Hex Nut Linear Bearing Brake Kit

- Adds grip to aid with adjustments with brake-ready bearing and secures it into semi-permanent position
- Includes mounting hardware

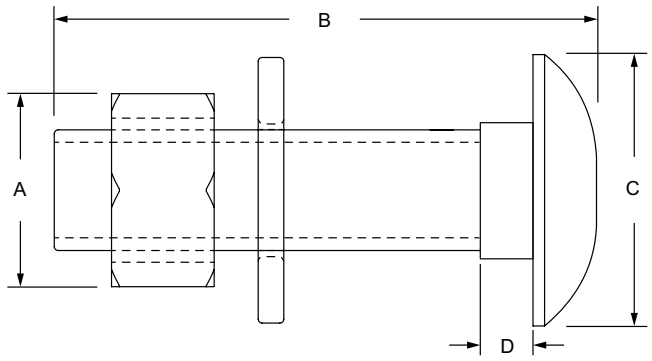

Part No.	Series	Material	Grade	Process	Finish	Color	A	B	C	D	Weight
6851	10	Steel	Grade 5	Formed	Zinc	Black	.438"	.865"	.500"	.150"	.023 lb
6803	15						.500"	1.406"	.703"	.150"	.048 lb
25-6851	25						11.11mm	21.97mm	12.70mm	3.81mm	.0104 kg
40-6803	40						12.70mm	35.71mm	17.86mm	3.81mm	.0217 kg

Wing Nut Linear Bearing Brake Kit

- Adds grip to aid with adjustments with brake-ready bearing and secures it into semi-permanent position
- Includes mounting hardware

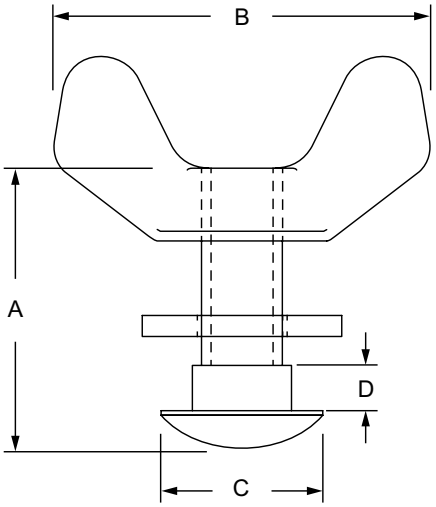

Part No.	Series	Material	Process	Finish	Color	A	B	C	D	Weight
6852	10	Steel	Cold Forged	Zinc	Bright / Black	.865"	1.158"	.500"	.150"	.028 lb
6804	15					1.416"	1.375"	.703"	.150"	.054 lb
25-6852	25					21.97mm	29.41mm	12.70mm	3.81mm	.0127 kg
40-6804	40					35.97mm	34.93mm	17.86mm	3.81mm	.0244 kg

80/20 BUILD YOUR IDEA
More on 80/20® products available at 8020.net

0 Degree Dynamic Pivot Nub

- No machining required
- Parallel to mounting profile
- Creates full axial motion ranging from 0-180 degrees
- Hardware to mount nub to profile included

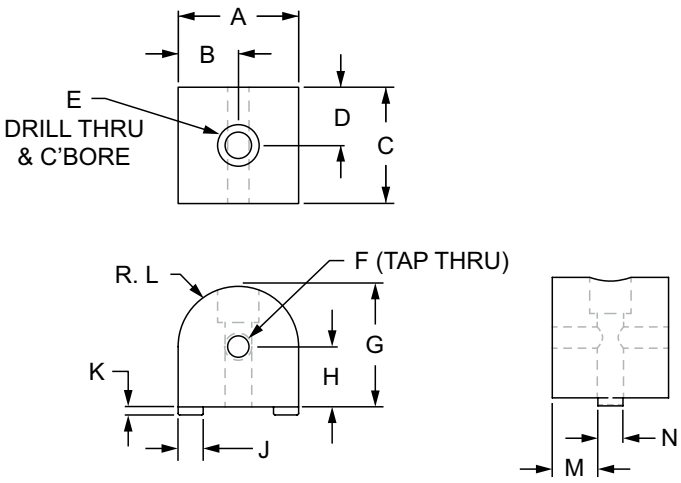

Part No.	Series	Color	A	B	C	D	E	F	G	H	J	K	L	M	N	Weight
4181	10	Clear	1.000"	.500"	.950"	.475"	1/4-20	1/4-20	1.000"	.500"	.245"	.060"	.500"	.353"	.245"	.096 lb
4181-Black	10	Black	1.000"	.500"	.950"	.475"	1/4-20	1/4-20	1.000"	.500"	.245"	.060"	.500"	.353"	.245"	.096 lb
4381	15	Clear	1.500"	.750"	1.448"	.724"	5/16-18	5/16-18	1.500"	.750"	.312"	.100"	.750"	.568"	.312"	.312 lb
4381-Black	15	Black	1.500"	.750"	1.448"	.724"	5/16-18	5/16-18	1.500"	.750"	.312"	.100"	.750"	.568"	.312"	.312 lb
25-4181	25	Clear	25.00mm	12.50mm	23.72mm	11.86mm	M6 x 1.0	M6 x 1.0	25.00mm	12.50mm	6.30mm	1.09mm	12.50mm	8.71mm	6.30mm	.0428 kg
25-4181-Black	25	Black	25.00mm	12.50mm	23.72mm	11.86mm	M6 x 1.0	M6 x 1.0	25.00mm	12.50mm	6.30mm	1.09mm	12.50mm	8.71mm	6.30mm	.0428 kg
40-4381	40	Clear	40.00mm	20.00mm	38.71mm	19.36mm	M8 x 1.25	M8 x 1.25	40.00mm	20.00mm	7.92mm	2.50mm	20.00mm	11.44mm	7.92mm	.1655 kg
40-4381-Black	40	Black	40.00mm	20.00mm	38.71mm	19.36mm	M8 x 1.25	M8 x 1.25	40.00mm	20.00mm	7.92mm	2.50mm	20.00mm	11.44mm	7.92mm	.1655 kg

Included Hardware (Mount Nub to T-Slot)

Part No.	Series	Qty.	Bolt	T-Nut
3306	10	1	1/4-20 x 1" SHCS	Economy
3613	15	1	5/16-18 x 1.5" SHCS	
75-3415	25	1	M6 x 25mm SHCS	
75-3479	40	1	M8 x 40mm SHCS	

Material Specifications

Material	Alloy*	Finish
Aluminum	6005A – T61	Anodize

* Or comparable

Suggested Hardware (Mount Arm to Nub)

Part No.	Series	Qty.	Bolt Assembly
3501	10	1	5/16 x 1/4" Shoulder Bolt & Thrust Washer
3500	15	1	3/8 x 3/8" Shoulder Bolt & Thrust Washer
25-3501	25	1	6mm x 6mm Shoulder Bolt & Thrust Washer
40-3500	40	1	10mm x 10mm Shoulder Bolt & Thrust Washer

Bearings & Pivots

90 Degree Dynamic Pivot Nub

- No machining required
- Perpendicular to mounting profile
- Creates full axial motion ranging from 0-180 degrees
- Hardware to mount nub to profile included

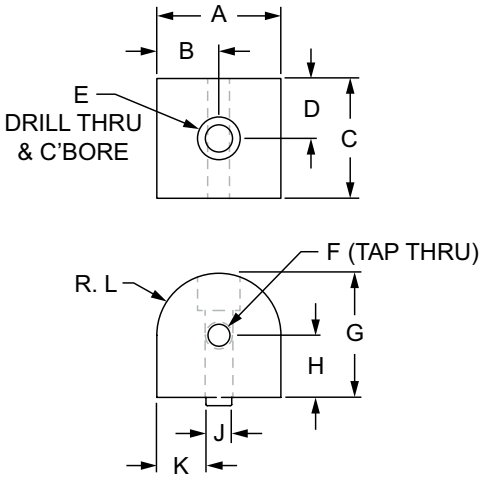

Part No.	Series	Color	A	B	C	D	E	F	G	H	J	K	L	M	N	Weight
4184	10	Clear	1.000"	.500"	.950"	.475"	1/4-20	1/4-20	1.000"	.500"	.245"	.377"	.500"	.060"	.211"	.095 lb
4184-Black	10	Black	1.000"	.500"	.950"	.475"	1/4-20	1/4-20	1.000"	.500"	.245"	.377"	.500"	.060"	.211"	.095 lb
4384	15	Clear	1.500"	.750"	1.448"	.724"	5/16-18	5/16-18	1.500"	.750"	.312"	0.594"	.750"	.100"	.312"	.311 lb
4384-Black	15	Black	1.500"	.750"	1.448"	.724"	5/16-18	5/16-18	1.500"	.750"	.312"	0.594"	.750"	.100"	.312"	.311 lb
25-4184	25	Clear	25.00mm	12.50mm	23.72mm	11.86mm	M6 x 1.0	M6 x 1.0	25.00mm	12.50mm	6.30mm	9.35mm	12.50mm	1.09mm	5.50mm	.0431 kg
25-4184-Black	25	Black	25.00mm	12.50mm	23.72mm	11.86mm	M6 x 1.0	M6 x 1.0	25.00mm	12.50mm	6.30mm	9.35mm	12.50mm	1.09mm	5.50mm	.0431 kg
40-4384	40	Clear	40.00mm	20.00mm	38.71mm	19.36mm	M8 x 1.25	M8 x 1.25	40.00mm	20.00mm	7.92mm	16.04mm	20.00mm	2.50mm	7.92mm	.1655 kg
40-4384-Black	40	Black	40.00mm	20.00mm	38.71mm	19.36mm	M8 x 1.25	M8 x 1.25	40.00mm	20.00mm	7.92mm	16.04mm	20.00mm	2.50mm	7.92mm	.1655 kg

Included Hardware (Mount Nub to T-Slot)

Part No.	Series	Qty.	Bolt	T-Nut
3306	10	1	1/4-20 x 1" SHCS	Economy
3613	15	1	5/16-18 x 1.5" SHCS	
75-3415	25	1	M6 x 25mm SHCS	
75-3479	40	1	M8 x 40mm SHCS	

Material Specifications

Material	Alloy*	Finish
Aluminum	6005A – T61	Anodize

* Or comparable

Suggested Hardware (Mount Arm to Nub)

Part No.	Series	Qty.	Bolt Assembly
3501	10	1	5/16 x 1/4" Shoulder Bolt & Thrust Washer
3500	15	1	3/8 x 3/8" Shoulder Bolt & Thrust Washer
25-3501	25	1	6mm x 6mm Shoulder Bolt & Thrust Washer
40-3500	40	1	10mm x 10mm Shoulder Bolt & Thrust Washer

80/20 BUILD YOUR IDEA
More on 80/20® products available at 8020.net

Universal Dynamic Pivot Nub

- No machining required
- Parallel or perpendicular to mounting profile
- Creates full axial motion ranging from 0-180 degrees
- Hardware to mount nub to profile included

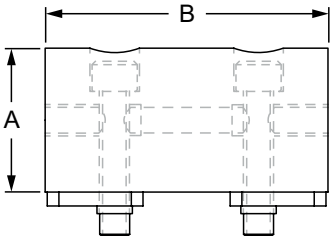

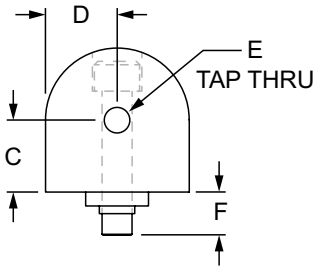

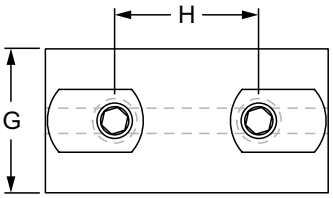

Part No.	Series	Color	A	B	C	D	E	F	G	H	Weight
4177	10	Clear	1.000"	1.950"	.500"	.500"	1/4-20	.275"	1.000"	1.000"	.200 lb
4177-Black	10	Black	1.000"	1.950"	.500"	.500"	1/4-20	.275"	1.000"	1.000"	.200 lb
4377	15	Clear	1.500"	2.948"	.750"	.750"	5/16-18	.450"	1.500"	1.500"	.635 lb
4377-Black	15	Black	1.500"	2.948"	.750"	.750"	5/16-18	.450"	1.500"	1.500"	.635 lb
25-4177	25	Clear	25.00mm	48.69mm	12.50mm	12.50mm	M6 x 1.0	6.88mm	25.00mm	25.00mm	.0871 kg
25-4177-Black	25	Black	25.00mm	48.69mm	12.50mm	12.50mm	M6 x 1.0	6.88mm	25.00mm	25.00mm	.0871 kg
40-4377	40	Clear	40.00mm	78.69mm	20.00mm	20.00mm	M8 x 1.25	11.43mm	40.00mm	40.00mm	.3344 kg
40-4377-Black	40	Black	40.00mm	78.69mm	20.00mm	20.00mm	M8 x 1.25	11.43mm	40.00mm	40.00mm	.3344 kg

Included Hardware (Mount Nub to T-Slot)

Part No.	Series	Qty.	Bolt	T-Nut
3306	10	2	1/4-20 x 1" SHCS	Economy
3613	15	2	5/16-18 x 1.5" SHCS	
75-3415	25	2	M6 x 25mm SHCS	
75-3479	40	2	M8 x 40mm SHCS	

Material Specifications

Material	Alloy*	Finish
Aluminum	6005A – T61	Anodize

* Or comparable

Suggested Hardware (Mount Arm to Nub)

Part No.	Series	Qty.	Bolt Assembly
3501	10	1	5/16 x 1/4" Shoulder Bolt & Thrust Washer
3500	15	1	3/8 x 3/8" Shoulder Bolt & Thrust Washer
25-3501	25	1	6mm x 6mm Shoulder Bolt & Thrust Washer
40-3500	40	1	10mm x 10mm Shoulder Bolt & Thrust Washer

Bearings & Pivots

0 Degree Dynamic Right Angle Pivot Nub

- No machining required
- Parallel to mounting profile
- Creates axial motion ranging from 0-90 degrees
- Hardware to mount nub to profile included

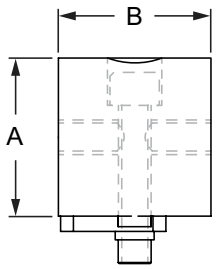

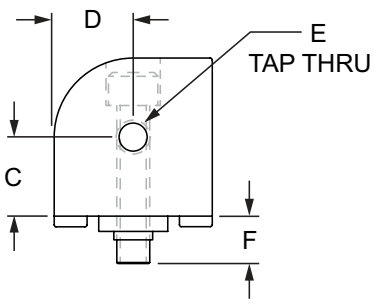

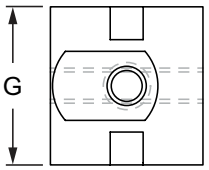

Part No.	Series	Color	A	B	C	D	E	F	G	Weight
4025	10	Clear	1.000"	.950"	.500"	.500"	1/4-20	.275"	1.000"	.102 lb
4025-Black	10	Black	1.000"	.950"	.500"	.500"	1/4-20	.275"	1.000"	.102 lb
4425	15	Clear	1.500"	1.448"	.750"	.750"	5/16-18	.450"	1.500"	.330 lb
4425-Black	15	Black	1.500"	1.448"	.750"	.750"	5/16-18	.450"	1.500"	.330 lb
25-4025	25	Clear	25.00mm	23.72mm	12.50mm	12.50mm	M6 x 1.0	6.88mm	25.00mm	.0450 kg
25-4025-Black	25	Black	25.00mm	23.72mm	12.50mm	12.50mm	M6 x 1.0	6.88mm	25.00mm	.0450 kg
40-4425	40	Clear	40.00mm	38.71mm	20.00mm	20.00mm	M8 x 1.25	11.43mm	40.00mm	.1736 kg
40-4425-Black	40	Black	40.00mm	38.71mm	20.00mm	20.00mm	M8 x 1.25	11.43mm	40.00mm	.1736 kg

Included Hardware (Mount Nub to T-Slot)

Part No.	Series	Qty.	Bolt	T-Nut
3306	10	1	1/4-20 x 1" SHCS	Economy
3613	15	1	5/16-18 x 1.5" SHCS	
75-3415	25	1	M6 x 25mm SHCS	
75-3479	40	1	M8 x 40mm SHCS	

Material Specifications

Material	Alloy*	Finish
Aluminum	6005A – T61	Anodize

* Or comparable

Suggested Hardware (Mount Arm to Nub)

Part No.	Series	Qty.	Bolt Assembly
3501	10	1	5/16 x 1/4" Shoulder Bolt & Thrust Washer
3500	15	1	3/8 x 3/8" Shoulder Bolt & Thrust Washer
25-3501	25	1	6mm x 6mm Shoulder Bolt & Thrust Washer
40-3500	40	1	10mm x 10mm Shoulder Bolt & Thrust Washer

80/20 BUILD YOUR IDEA
More on 80/20® products available at 8020.net

90 Degree Dynamic Right Angle Pivot Nub

- No machining required
- Perpendicular to mounting profile
- Creates full axial motion ranging from 0-90 degrees
- Hardware to mount nub to profile included

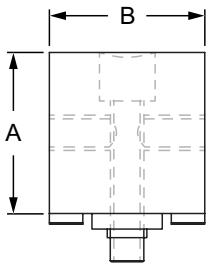

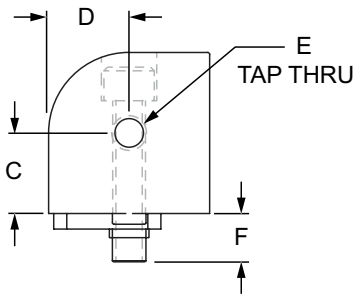

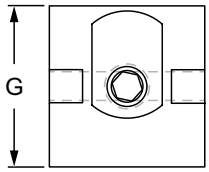

Part No.	Series	Color	A	B	C	D	E	F	G	Weight
4026	10	Clear	1.000"	.950"	.500"	.500"	1/4-20	.275"	1.000"	.102 lb
4026-Black	10	Black	1.000"	.950"	.500"	.500"	1/4-20	.275"	1.000"	.102 lb
4426	15	Clear	1.500"	1.448"	.750"	.750"	5/16-18	.450"	1.500"	.328 lb
4426-Black	15	Black	1.500"	1.448"	.750"	.750"	5/16-18	.450"	1.500"	.328 lb
25-4026	25	Clear	25.00mm	23.72mm	12.50mm	12.50mm	M6 x 1.0	6.88mm	25.00mm	.0450 kg
25-4026-Black	25	Black	25.00mm	23.72mm	12.50mm	12.50mm	M6 x 1.0	6.88mm	25.00mm	.0450 kg
40-4426	40	Clear	40.00mm	38.71mm	20.00mm	20.00mm	M8 x 1.25	11.43mm	40.00mm	.1742 kg
40-4426-Black	40	Black	40.00mm	38.71mm	20.00mm	20.00mm	M8 x 1.25	11.43mm	40.00mm	.1742 kg

Included Hardware (Mount Nub to T-Slot)

Part No.	Series	Qty.	Bolt	T-Nut
3306	10	1	1/4-20 x 1" SHCS	Economy
3613	15	1	5/16-18 x 1.5" SHCS	
75-3415	25	1	M6 x 25mm SHCS	
75-3479	40	1	M8 x 40mm SHCS	

Material Specifications

Material	Alloy*	Finish
Aluminum	6005A – T61	Anodize

* Or comparable

Suggested Hardware (Mount Arm to Nub)

Part No.	Series	Qty.	Bolt Assembly
3501	10	1	5/16 x 1/4" Shoulder Bolt & Thrust Washer
3500	15	1	3/8 x 3/8" Shoulder Bolt & Thrust Washer
25-3501	25	1	6mm x 6mm Shoulder Bolt & Thrust Washer
40-3500	40	1	10mm x 10mm Shoulder Bolt & Thrust Washer

Bearings & Pivots

Universal Dynamic Right Angle Pivot Nub

- No machining required
- Parallel or perpendicular to mounting profile
- Creates full axial motion ranging from 0-90 degrees
- Hardware to mount nub to profile included

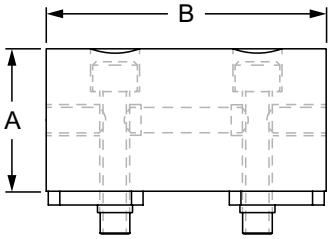

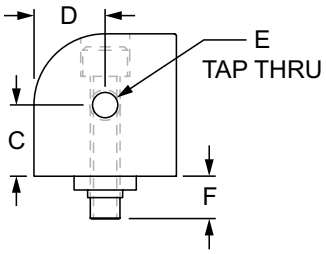

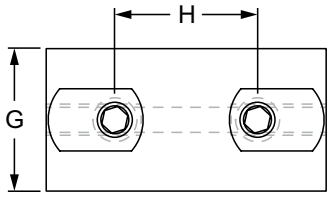

Part No.	Series	Color	A	B	C	D	E	F	G	H	Weight
4027	10	Clear	1.000"	1.950"	.500"	.500"	1/4-20	.275"	1.000"	1.000"	.20 lb
4027-Black	10	Black	1.000"	1.950"	.500"	.500"	1/4-20	.275"	1.000"	1.000"	.20 lb
4427	15	Clear	1.500"	2.948"	.750"	.750"	5/16-18	.450"	1.500"	1.500"	.672 lb
4427-Black	15	Black	1.500"	2.948"	.750"	.750"	5/16-18	.450"	1.500"	1.500"	.672 lb
25-4027	25	Clear	25.00mm	48.69mm	12.50mm	12.50mm	M6 x 1.0	6.88mm	25.00mm	25.00mm	.091 kg
25-4027-Black	25	Black	25.00mm	48.69mm	12.50mm	12.50mm	M6 x 1.0	6.88mm	25.00mm	25.00mm	.091 kg
40-4427	40	Clear	40.00mm	78.69mm	20.00mm	20.00mm	M8 x 1.25	11.43mm	40.00mm	40.00mm	.3503 kg
40-4427-Black	40	Black	40.00mm	78.69mm	20.00mm	20.00mm	M8 x 1.25	11.43mm	40.00mm	40.00mm	.3503 kg

Included Hardware (Mount Nub to T-Slot)

Part No.	Series	Qty.	Bolt	T-Nut
3306	10	2	1/4-20 x 1" SHCS	Economy
3613	15	2	5/16-18 x 1.5" SHCS	
75-3415	25	2	M6 x 25mm SHCS	
75-3479	40	2	M8 x 40mm SHCS	

Material Specifications

Material	Alloy*	Finish
Aluminum	6005A – T61	Anodize

* Or comparable

Suggested Hardware (Mount Arm to Nub)

Part No.	Series	Qty.	Bolt Assembly
3501	10	1	5/16 x 1/4" Shoulder Bolt & Thrust Washer
3500	15	1	3/8 x 3/8" Shoulder Bolt & Thrust Washer
25-3501	25	1	6mm x 6mm Shoulder Bolt & Thrust Washer
40-3500	40	1	10mm x 10mm Shoulder Bolt & Thrust Washer

80/20 BUILD YOUR IDEA
More on 80/20® products available at 8020.net

"L" Dynamic Pivot Arm

- Used in assemblies to create dynamic pivot
- Includes lubricated bronze bushings
- Pre-load hardware prior to connecting profiles
- Hardware to mount arm to profile included

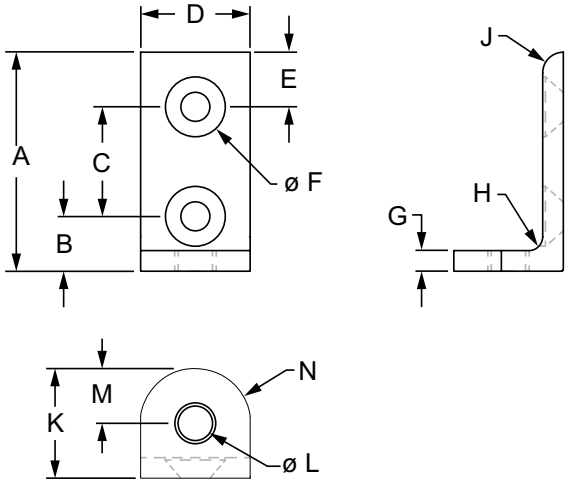

Part No.	Series	Color	A	B	C	D	E	F	G	H	J	K	L	M	N	Weight
4172	10	Clear	2.000"	.500"	1.000"	1.000"	.500"	.257"	.188"	.125"	.188"	1.000"	.312"	.500"	.505"	.079 lb
4172-Black	10	Black	2.000"	.500"	1.000"	1.000"	.500"	.257"	.188"	.125"	.188"	1.000"	.312"	.500"	.505"	.079 lb
4343	15	Clear	3.000"	.750"	1.500"	1.500"	.750"	.328"	.250"	.312"	.250"	1.500"	.375"	.750"	.755"	.215 lb
4343-Black	15	Black	3.000"	.750"	1.500"	1.500"	.750"	.328"	.250"	.312"	.250"	1.500"	.375"	.750"	.755"	.215 lb
25-4172	25	Clear	50.00mm	12.50mm	25.00mm	25.00mm	12.50mm	6.23mm	4.00mm	3.00mm	4.00mm	25.00mm	8.00mm	12.50mm	12.50mm	.0471 kg
25-4172-Black	25	Black	50.00mm	12.50mm	25.00mm	25.00mm	12.50mm	6.23mm	4.00mm	3.00mm	4.00mm	25.00mm	8.00mm	12.50mm	12.50mm	.0471 kg
40-4343	40	Clear	80.00mm	20.00mm	40.00mm	40.00mm	20.00mm	8.13mm	6.00mm	8.00mm	6.00mm	40.00mm	10.00mm	20.00mm	19.91mm	.1002 kg
40-4343-Black	40	Black	80.00mm	20.00mm	40.00mm	40.00mm	20.00mm	8.13mm	6.00mm	8.00mm	6.00mm	40.00mm	10.00mm	20.00mm	19.91mm	.1002 kg

Included Hardware (Mount Arm to T-Slot)

Part No.	Series	Qty.	Bolt	T-Nut
3414	10	2	1/4-20 x 1/2" FHSCS	Economy
3412	15	2	5/16-18 x 5/8" FHSCS	
75-3541	25	2	M6 x 10mm FHSCS	
75-3508	40	2	M8 x 16mm FHSCS	

Material Specifications

Material	Alloy*	Finish
Aluminum	6005A – T61	Anodize

* Or comparable

Suggested Hardware (Mount Arm to Nub)

Part No.	Series	Qty.	Bolt Assembly
3501	10	1	5/16 x 1/4" Shoulder Bolt & Thrust Washer
3500	15	1	3/8 x 3/8" Shoulder Bolt & Thrust Washer
25-3501	25	1	6mm x 6mm Shoulder Bolt & Thrust Washer
40-3500	40	1	10mm x 10mm Shoulder Bolt & Thrust Washer

Bearings & Pivots

Standard Straight Dynamic Pivot Arm

- Used to create dynamic pivot between profiles
- Includes lubricated bronze bushings
- Pre-load hardware prior to connecting profiles
- Hardware to mount arm to profile included

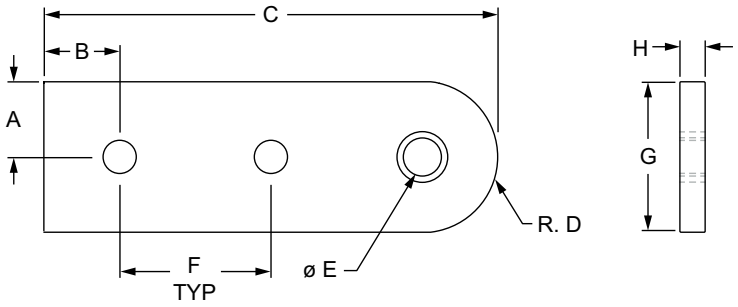

Part No.	Series	Color	A	B	C	D	E	F	G	H	Weight
4185	10	Clear	.500"	.500"	3.000"	.505"	.373"	1.000"	1.000"	.188"	.089 lb
4185-Black	10	Black	.500"	.500"	3.000"	.505"	.373"	1.000"	1.000"	.188"	.089 lb
4385	15	Clear	.745"	.750"	4.495"	.750"	.500"	1.500"	1.490"	.250"	.254 lb
4385-Black	15	Black	.745"	.750"	4.495"	.750"	.500"	1.500"	1.490"	.250"	.254 lb
25-4185	25	Clear	12.50mm	12.50mm	75.00mm	12.50mm	10.00mm	25.00mm	25.00mm	4.00mm	.0340 kg
25-4185-Black	25	Black	12.50mm	12.50mm	75.00mm	12.50mm	10.00mm	25.00mm	25.00mm	4.00mm	.0340 kg
40-4385	40	Clear	20.00mm	20.00mm	120.00mm	20.00mm	14.00mm	40.00mm	40.00mm	6.35mm	.1177 kg
40-4385-Black	40	Black	20.00mm	20.00mm	120.00mm	20.00mm	14.00mm	40.00mm	40.00mm	6.35mm	.1177 kg

Included Hardware (Mount Arm to T-Slot)

Part No.	Series	Qty.	Bolt	T-Nut
3356	10	1	1/4-20 x 1/2" FBHSCS	Double Economy
3355	15	1	5/16-18 x 11/16" SHCS	
75-3509	25	1	M6 x 10mm BHSCS	
75-3513	40	1	M8 x 16mm BHSCS	

Material Specifications

Material	Alloy*	Finish
Aluminum	6005A – T61	Anodize

* Or comparable

Suggested Hardware (Mount Arm to Nub)

Part No.	Series	Qty.	Bolt Assembly
3501	10	1	5/16 x 1/4" Shoulder Bolt & Thrust Washer
3500	15	1	3/8 x 3/8" Shoulder Bolt & Thrust Washer
25-3501	25	1	6mm x 6mm Shoulder Bolt & Thrust Washer
40-3500	40	1	10mm x 10mm Shoulder Bolt & Thrust Washer

80/20 BUILD YOUR IDEA
More on 80/20® products available at 8020.net

Standard 0 Degree Dynamic Pivot Assembly with Dual Straight Arms

- Includes lubricated bronze bushings and nylon thrust washers; hardware and skim kit included
- Creates full axial motion ranging from 0-180 degrees; parallel to mounting profile

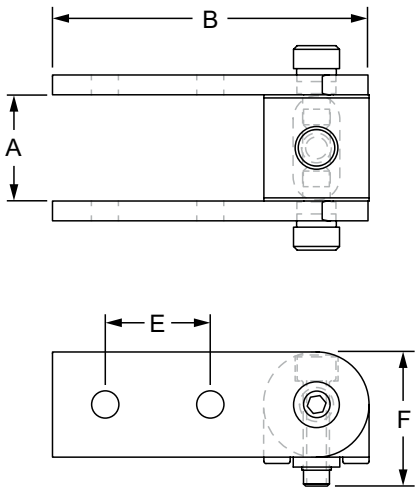

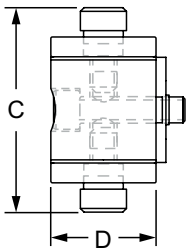

Part No.	Series	Nub (Qty.)	Arm (Qty.)	Color	A	B	C	D	E	F	Weight
4180	10	4181 (1)	4185 (2)	Clear	1.010"	3.010"	1.858"	1.000"	1.000"	1.275"	.315 lb
4180-Black	10	4181 (1)	4185 (2)	Black	1.010"	3.010"	1.858"	1.000"	1.000"	1.275"	.315 lb
4380	15	4381 (1)	4385 (2)	Clear	1.512"	4.500"	2.313"	1.500"	1.500"	1.950"	.883 lb
4380-Black	15	4381 (1)	4385 (2)	Black	1.512"	4.500"	2.313"	1.500"	1.500"	1.950"	.883 lb
25-4180	25	25-4181 (1)	25-4185 (2)	Clear	25.24mm	75.00mm	47.78mm	25.00mm	25.00mm	31.88mm	.1279 kg
25-4180-Black	25	25-4181 (1)	25-4185 (2)	Black	25.24mm	75.00mm	47.78mm	25.00mm	25.00mm	31.88mm	.1279 kg
40-4380	40	40-4381 (1)	40-4385 (2)	Clear	40.33mm	120.00mm	74.68mm	40.00mm	40.00mm	51.43mm	.4500 kg
40-4380-Black	40	40-4381 (1)	40-4385 (2)	Black	40.33mm	120.00mm	74.68mm	40.00mm	40.00mm	51.43mm	.4500 kg

Material Specifications

Material	Alloy*	Finish
Aluminum	6005A – T61	Anodize

* Or comparable

Included Mounting Hardware

Series	Nub to Profile		Arms to Nub		Arms to Profile	
	Part No.	Qty.	Part No.	Qty.	Part No.	Qty.
10	3306	1	3501	1	3356	2
15	3613	1	3500	1	3355	2
25	75-3415	1	25-3501	1	75-3509	2
40	75-3479	1	40-3500	1	75-3513	2

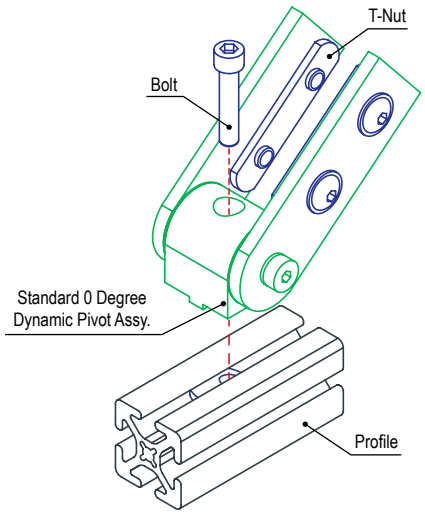

Bearings & Pivots

Standard 90 Degree Dynamic Pivot Assembly with Dual Straight Arms

- Includes lubricated bronze bushings and nylon thrust washers; hardware and skim kit included
- Creates full axial motion ranging from 0-180 degrees; perpendicular to mounting profile

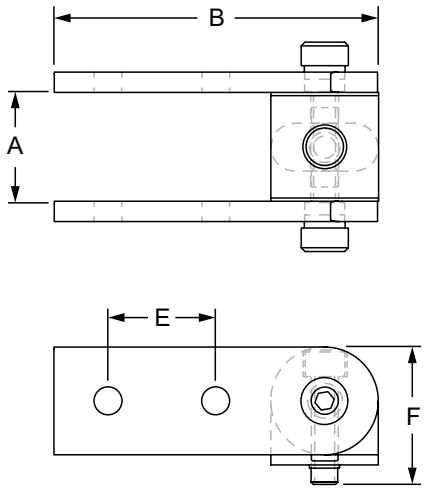

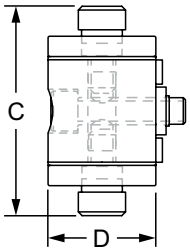

Part No.	Series	Nub (Qty.)	Arm (Qty.)	Color	A	B	C	D	E	F	Weight
4183	10	4184 (1)	4185 (2)	Clear	1.010"	3.010"	1.858"	1.000"	1.000"	1.275"	.314 lb
4183-Black	10	4184 (1)	4185 (2)	Black	1.010"	3.010"	1.858"	1.000"	1.000"	1.275"	.314 lb
4383	15	4384 (1)	4385 (2)	Clear	1.512"	4.500"	2.313"	1.500"	1.500"	1.950"	.889 lb
4383-Black	15	4384 (1)	4385 (2)	Black	1.512"	4.500"	2.313"	1.500"	1.500"	1.950"	.889 lb
25-4183	25	25-4184 (1)	25-4185 (2)	Clear	25.24mm	75.00mm	47.78mm	25.00mm	25.00mm	31.88mm	.1109 kg
25-4183-Black	25	25-4184 (1)	25-4185 (2)	Black	25.24mm	75.00mm	47.78mm	25.00mm	25.00mm	31.88mm	.1109 kg
40-4383	40	40-4384 (1)	40-4385 (2)	Clear	40.33mm	120.00mm	74.68mm	40.00mm	40.00mm	51.43mm	.4475 kg
40-4383-Black	40	40-4384 (1)	40-4385 (2)	Black	40.33mm	120.00mm	74.68mm	40.00mm	40.00mm	51.43mm	.4475 kg

Material Specifications

Material	Alloy*	Finish
Aluminum	6005A – T61	Anodize

* Or comparable

Included Mounting Hardware

Series	Nub to Profile		Arms to Nub		Arms to Profile	
	Part No.	Qty.	Part No.	Qty.	Part No.	Qty.
10	3306	1	3501	1	3356	2
15	3613	1	3500	1	3355	2
25	75-3415	1	25-3501	1	75-3509	2
40	75-3479	1	40-3500	1	75-3513	2

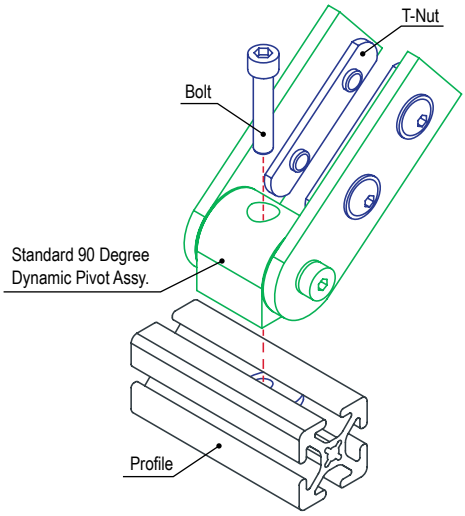

80/20 BUILD YOUR IDEA
More on 80/20® products available at 8020.net

Standard Universal Dynamic Pivot Assembly with Dual Straight Arms

- Includes lubricated bronze bushings and nylon thrust washers; hardware and skim kit included
- Creates full axial motion ranging from 0-180 degrees; parallel or perpendicular to mounting profile

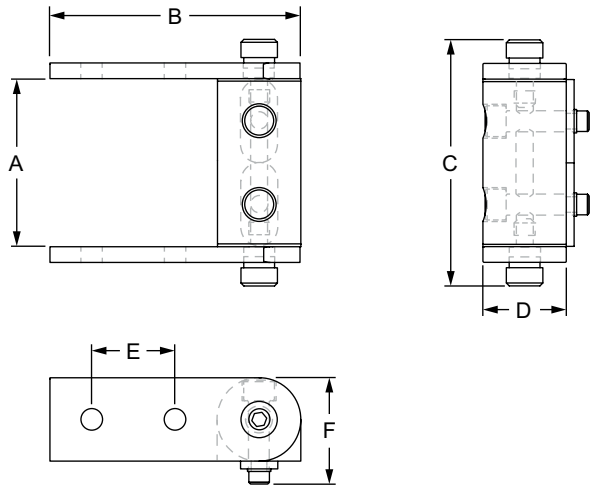

Part No.	Series	Nub (Qty.)	Arm (Qty.)	Color	A	B	C	D	E	F	Weight
4178	10	4177 (1)	4185 (2)	Clear	2.010"	3.010"	2.858"	1.000"	1.000"	1.275"	.409 lb
4178-Black	10	4177 (1)	4185 (2)	Black	2.010"	3.010"	2.858"	1.000"	1.000"	1.275"	.409 lb
4379	15	4377 (1)	4385 (2)	Clear	3.012"	4.500"	3.813"	1.500"	1.500"	1.950"	1.214 lb
4379-Black	15	4377 (1)	4385 (2)	Black	3.012"	4.500"	3.813"	1.500"	1.500"	1.950"	1.214 lb
25-4178	25	25-4177 (1)	25-4185 (2)	Clear	50.24mm	75.00mm	72.78mm	25.00mm	25.00mm	31.88mm	.1756 kg
25-4178-Black	25	25-4177 (1)	25-4185 (2)	Black	50.24mm	75.00mm	72.78mm	25.00mm	25.00mm	31.88mm	.1756 kg
40-4379	40	40-4377 (1)	40-4385 (2)	Clear	80.33mm	120.00mm	114.68mm	40.00mm	40.00mm	51.43mm	.6123 kg
40-4379-Black	40	40-4377 (1)	40-4385 (2)	Black	80.33mm	120.00mm	114.68mm	40.00mm	40.00mm	51.43mm	.6123 kg

Material Specifications

Material	Alloy*	Finish
Aluminum	6005A – T61	Anodize

* Or comparable

Included Mounting Hardware

Series	Nub to Profile		Arms to Nub		Arms to Profile	
	Part No.	Qty.	Part No.	Qty.	Part No.	Qty.
10	3306	2	3501	1	3356	2
15	3613	2	3500	1	3355	2
25	75-3415	2	25-3501	1	75-3509	2
40	75-3479	2	40-3500	1	75-3513	2

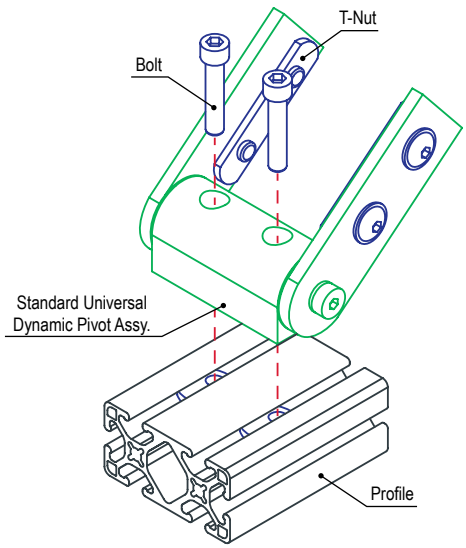

Bearings & Pivots

Standard 0 Degree Dynamic Pivot Assembly with Dual "L" Arms

- Includes lubricated bronze bushings and nylon thrust washers; hardware included
- Creates full axial motion ranging from 0-180 degrees; perpendicular to mounting profile

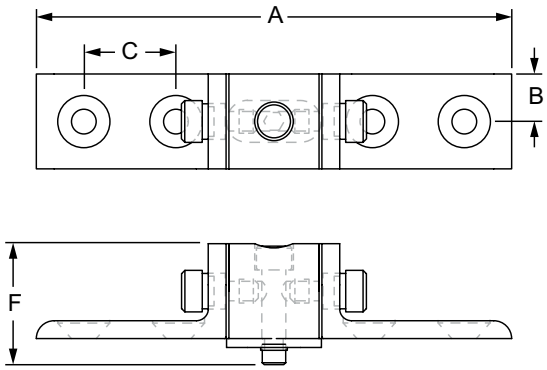

Part No.	Series	Nub (Qty.)	Arm (Qty.)	Color	A	B	C	D	E	F	Weight
4168	10	4181 (1)	4172 (2)	Clear	5.010"	.500"	1.000"	1.000"	1.060"	1.275"	.292 lb
4168-Black	10	4181 (1)	4172 (2)	Black	5.010"	.500"	1.000"	1.000"	1.060"	1.275"	.292 lb
4321	15	4381 (1)	4343 (2)	Clear	7.512"	.750"	1.500"	1.500"	1.600"	1.950"	.813 lb
4321-Black	15	4381 (1)	4343 (2)	Black	7.512"	.750"	1.500"	1.500"	1.600"	1.950"	.813 lb
25-4168	25	25-4181 (1)	25-4172 (2)	Clear	125.22mm	12.50mm	25.00mm	25.00mm	26.09mm	31.88mm	.1217 kg
25-4168-Black	25	25-4181 (1)	25-4172 (2)	Black	125.22mm	12.50mm	25.00mm	25.00mm	26.09mm	31.88mm	.1217 kg
40-4321	40	40-4381 (1)	40-4343 (2)	Clear	200.00mm	20.00mm	40.00mm	40.00mm	42.50mm	51.43mm	.4080 kg
40-4321-Black	40	40-4381 (1)	40-4343 (2)	Black	200.00mm	20.00mm	40.00mm	40.00mm	42.50mm	51.43mm	.4080 kg

Material Specifications

Material	Alloy*	Finish
Aluminum	6005A – T61	Anodize

* Or comparable

Included Mounting Hardware

Series	Nub to Profile		Arms to Nub		Arms to Profile	
	Part No.	Qty.	Part No.	Qty.	Part No.	Qty.
10	3306	1	3501	1	3414	4
15	3613	1	3500	1	3412	4
25	75-3415	1	25-3501	1	75-3541	4
40	75-3479	1	40-3500	1	75-3508	4

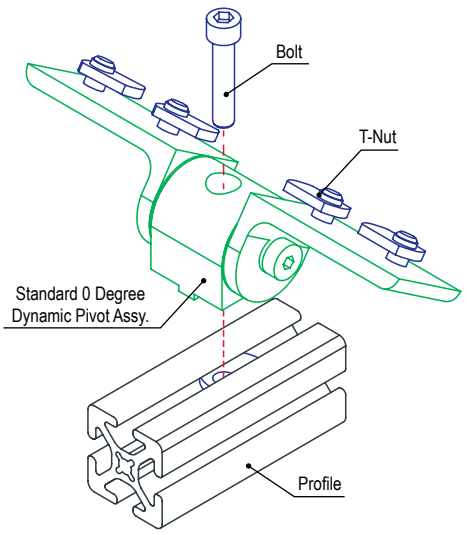

80/20 BUILD YOUR IDEA
More on 80/20® products available at 8020.net

Standard 90 Degree Dynamic Pivot Assembly with Dual "L" Arms

- Includes lubricated bronze bushings and nylon thrust washers; hardware included
- Creates full axial motion ranging from 0-180 degrees; parallel to mounting profile

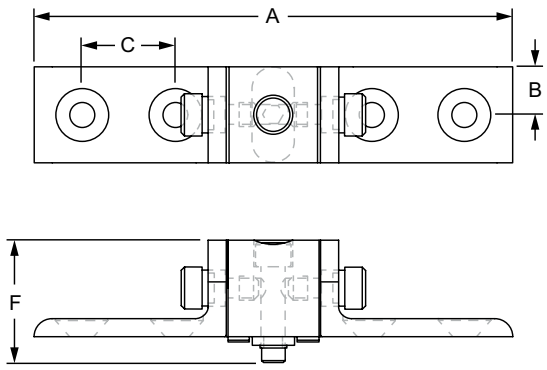

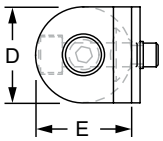

Part No.	Series	Nub (Qty.)	Arm (Qty.)	Color	A	B	C	D	E	F	Weight
4169	10	4184 (1)	4172 (2)	Clear	5.010"	.500"	1.000"	1.000"	1.000"	1.275"	.268 lb
4169-Black	10	4184 (1)	4172 (2)	Black	5.010"	.500"	1.000"	1.000"	1.000"	1.275"	.268 lb
4322	15	4384 (1)	4343 (2)	Clear	7.512"	.750"	1.500"	1.500"	1.500"	1.950"	.810 lb
4322-Black	15	4384 (1)	4343 (2)	Black	7.512"	.750"	1.500"	1.500"	1.500"	1.950"	.810 lb
25-4169	25	25-4184 (1)	25-4172 (2)	Clear	125.22mm	12.50mm	25.00mm	25.00mm	25.00mm	31.88mm	.1219 kg
25-4169-Black	25	25-4184 (1)	25-4172 (2)	Black	125.22mm	12.50mm	25.00mm	25.00mm	25.00mm	31.88mm	.1219 kg
40-4322	40	40-4384 (1)	40-4343 (2)	Clear	200.00mm	20.00mm	40.00mm	40.00mm	40.00mm	51.43mm	.4073 kg
40-4322-Black	40	40-4384 (1)	40-4343 (2)	Black	200.00mm	20.00mm	40.00mm	40.00mm	40.00mm	51.43mm	.4073 kg

Material Specifications

Material	Alloy*	Finish
Aluminum	6005A – T61	Anodize

* Or comparable

Included Mounting Hardware

Series	Nub to Profile		Arms to Nub		Arms to Profile	
	Part No.	Qty.	Part No.	Qty.	Part No.	Qty.
10	3306	1	3501	1	3414	4
15	3613	1	3500	1	3412	4
25	75-3415	1	25-3501	1	75-3541	4
40	75-3479	1	40-3500	1	75-3508	4

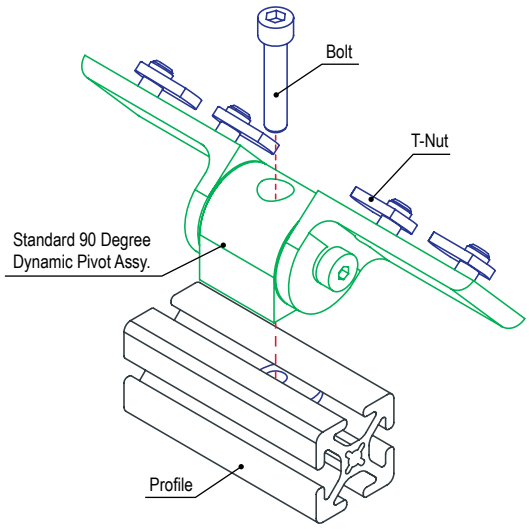

Bearings & Pivots

Standard Universal Dynamic Pivot Assembly with Dual "L" Arms

- Includes lubricated bronze bushings and nylon thrust washers; hardware included
- Creates full axial motion ranging from 0-180 degrees; parallel or perpendicular to mounting profile

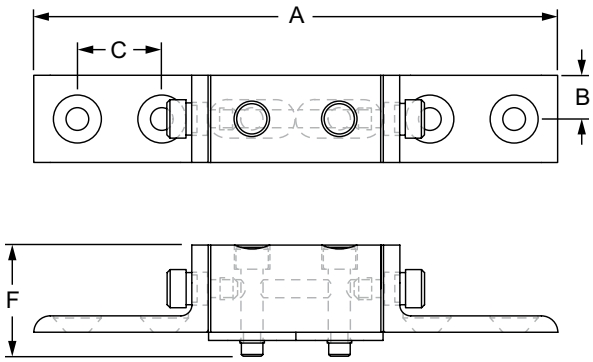

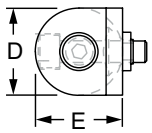

Part No.	Series	Nub (Qty.)	Arm (Qty.)	Color	A	B	C	D	E	F	Weight
4171	10	4177 (1)	4172 (2)	Clear	6.010"	.500"	1.000"	1.000"	1.000"	1.275"	.391 lb
4171-Black	10	4177 (1)	4172 (2)	Black	6.010"	.500"	1.000"	1.000"	1.000"	1.275"	.391 lb
4323	15	4377 (1)	4343 (2)	Clear	9.012"	.750"	1.500"	1.500"	1.500"	1.950"	1.275 lb
4323-Black	15	4377 (1)	4343 (2)	Black	9.012"	.750"	1.500"	1.500"	1.500"	1.950"	1.275 lb
25-4171	25	25-4177 (1)	25-4172 (2)	Clear	150.22mm	12.50mm	25.00mm	25.00mm	25.00mm	31.88mm	.1667 kg
25-4171-Black	25	25-4177 (1)	25-4172 (2)	Black	150.22mm	12.50mm	25.00mm	25.00mm	25.00mm	31.88mm	.1667 kg
40-4323	40	40-4377 (1)	40-4343 (2)	Clear	240.22mm	20.00mm	40.00mm	40.00mm	40.00mm	51.43mm	.5797 kg
40-4323-Black	40	40-4377 (1)	40-4343 (2)	Black	240.22mm	20.00mm	40.00mm	40.00mm	40.00mm	51.43mm	.5797 kg

Material Specifications

Material	Alloy*	Finish
Aluminum	6005A – T61	Anodize

* Or comparable

Included Mounting Hardware

Series	Nub to Profile		Arms to Nub		Arms to Profile	
	Part No.	Qty.	Part No.	Qty.	Part No.	Qty.
10	3306	2	3501	1	3414	4
15	3613	2	3500	1	3412	4
25	75-3415	2	25-3501	1	75-3541	4
40	75-3479	2	40-3500	1	75-3508	4

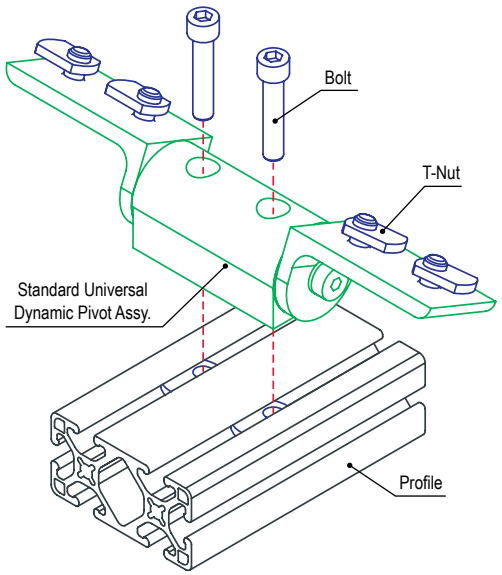

80/20 BUILD YOUR IDEA
More on 80/20® products available at 8020.net

Standard 0 Degree Dynamic Pivot Assembly with Straight and "L" Arm

- Includes lubricated bronze bushings and nylon thrust washers; hardware included
- Creates full axial motion ranging from 0-180 degrees; parallel to mounting profile

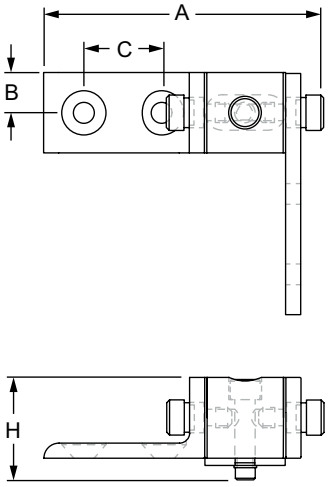

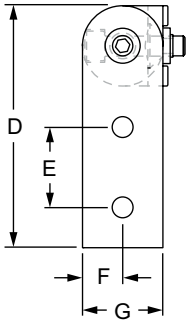

Part No.	Series	Nub (Qty.)	Arm (Qty.)	Color	A	B	C	D	E	F	G	H	Weight
4161	10	4181 (1)	4185 (1) 4172 (1)	Clear	3.448"	.500"	1.000"	3.010"	1.000"	.500"	1.000"	1.275"	.296 lb
4161-Black	10	4181 (1)	4185 (1) 4172 (1)	Black	3.448"	.500"	1.000"	3.010"	1.000"	.500"	1.000"	1.275"	.296 lb
4363	15	4381 (1)	4385 (1) 4343 (1)	Clear	5.074"	.750"	1.500"	4.500"	1.500"	.750"	1.500"	1.950"	.848 lb
4363-Black	15	4381 (1)	4385 (1) 4343 (1)	Black	5.074"	.750"	1.500"	4.500"	1.500"	.750"	1.500"	1.950"	.848 lb

Material Specifications

Material	Alloy*	Finish
Aluminum	6005A – T61	Anodize

* Or comparable

Included Mounting Hardware

Series	Nub to Profile		Arms to Nub		Arms to Profile				
	Part No.	Qty.	Part No.	Qty.	Part No.	Qty.	AND	Part No.	Qty.
10	3306	1	3501	1	3356	1		3414	2
15	3613	1	3500	1	3355	1		3412	2

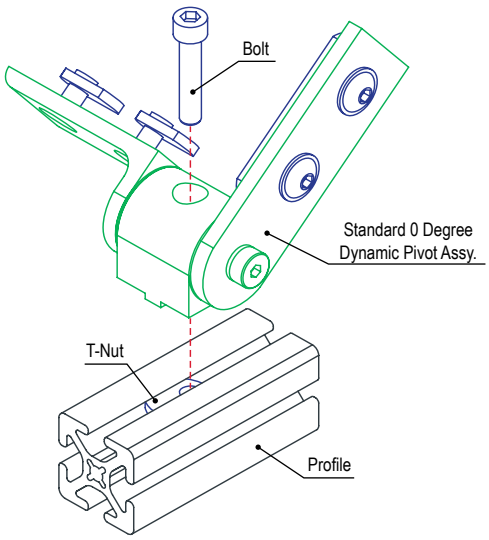

Bearings & Pivots

Standard 90 Degree Dynamic Pivot Assembly with Straight and "L" Arm

- Includes lubricated bronze bushings and nylon thrust washers; hardware included
- Creates full axial motion ranging from 0-180 degrees; perpendicular to mounting profile

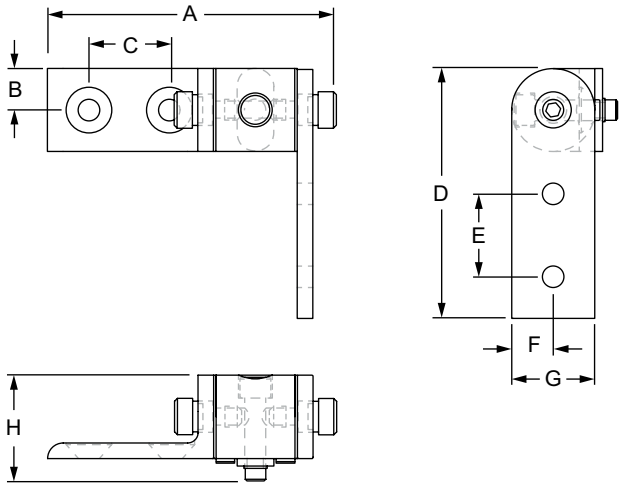

Part No.	Series	Nub (Qty.)	Arm (Qty.)	Color	A	B	C	D	E	F	G	H	Weight
4162	10	4184 (1)	4185 (1) 4172 (1)	Clear	3.448"	.500"	1.000"	3.010"	1.000"	.500"	1.000"	1.275"	.295 lb
4162-Black	10	4184 (1)	4185 (1) 4172 (1)	Black	3.448"	.500"	1.000"	3.010"	1.000"	.500"	1.000"	1.275"	.295 lb
4364	15	4384 (1)	4385 (1) 4343 (1)	Clear	5.074"	.750"	1.500"	4.500"	1.500"	.750"	1.500"	1.950"	.849 lb
4364-Black	15	4384 (1)	4385 (1) 4343 (1)	Black	5.074"	.750"	1.500"	4.500"	1.500"	.750"	1.500"	1.950"	.849 lb

Material Specifications

Material	Alloy*	Finish
Aluminum	6005A – T61	Anodize

* Or comparable

Included Mounting Hardware

Series	Nub to Profile		Arms to Nub		Arms to Profile				
	Part No.	Qty.	Part No.	Qty.	Part No.	Qty.	AND	Part No.	Qty.
10	3306	1	3501	1	3356	1		3414	2
15	3613	1	3500	1	3355	1		3412	2

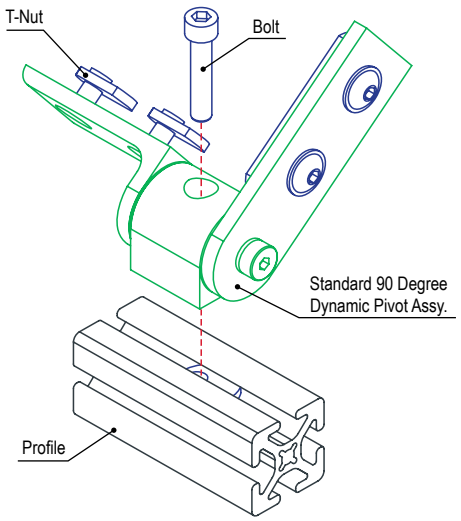

80/20 BUILD YOUR IDEA
More on 80/20® products available at 8020.net

Standard Universal Dynamic Pivot Assembly with Straight and "L" Arm

- Includes lubricated bronze bushings and nylon thrust washers; hardware included
- Creates full axial motion ranging from 0-180 degrees; parallel or perpendicular to mounting profile

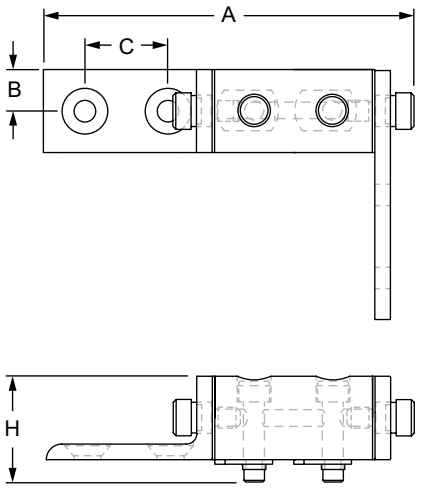

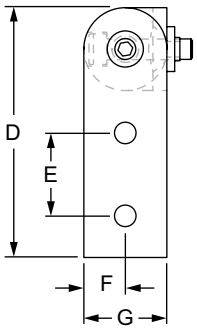

Part No.	Series	Nub (Qty.)	Arm (Qty.)	Color	A	B	C	D	E	F	G	H	Weight
4163	10	4177 (1)	4185 (1) 4172 (1)	Clear	4.448"	.500"	1.000"	3.010"	1.000"	.500"	1.000"	1.275"	.399 lb
4163-Black	10	4177 (1)	4185 (1) 4172 (1)	Black	4.448"	.500"	1.000"	3.010"	1.000"	.500"	1.000"	1.275"	.399 lb
4313	15	4377 (1)	4385 (1) 4343 (1)	Clear	6.574"	.750"	1.500"	4.500"	1.500"	.750"	1.500"	1.950"	1.178 lb
4313-Black	15	4377 (1)	4385 (1) 4343 (1)	Black	6.574"	.750"	1.500"	4.500"	1.500"	.750"	1.500"	1.950"	1.178 lb

Material Specifications

Material	Alloy*	Finish
Aluminum	6005A – T61	Anodize

* Or comparable

Included Mounting Hardware

Series	Nub to Profile		Arms to Nub		Arms to Profile				
	Part No.	Qty.	Part No.	Qty.	Part No.	Qty.	AND	Part No.	Qty.
10	3306	2	3501	1	3356	1		3414	2
15	3613	2	3500	1	3355	1		3412	2

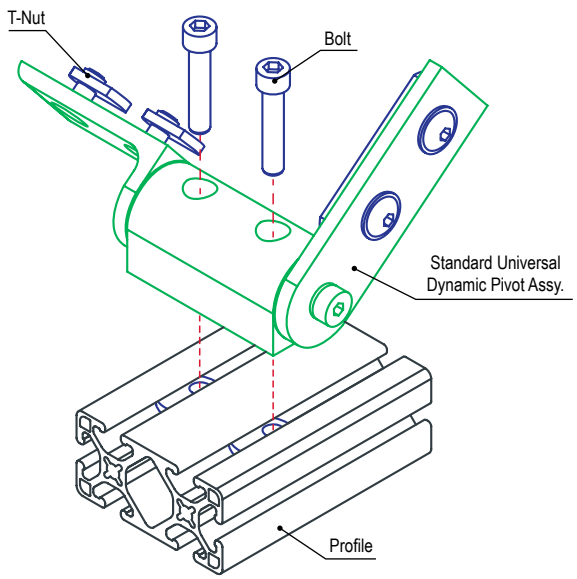

Bearings & Pivots

Right Angle 0 Degree Dynamic Pivot Assembly with Dual Straight Arms

- Includes lubricated bronze bushings and nylon thrust washers; skim kit and hardware included
- Creates full axial motion ranging from 0-90 degrees; parallel to mounting profile

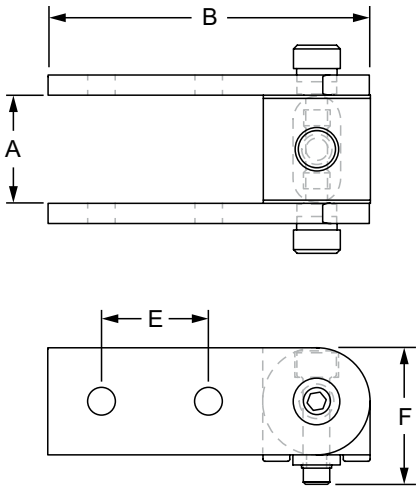

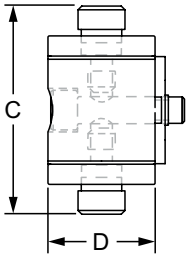

Part No.	Series	Nub (Qty.)	Arm (Qty.)	Color	A	B	C	D	E	F	Weight
4028	10	4025 (1)	4185 (2)	Clear	1.010"	3.010"	1.858"	1.000"	1.000"	1.275"	.312 lb
4028-Black	10	4025 (1)	4185 (2)	Black	1.010"	3.010"	1.858"	1.000"	1.000"	1.275"	.312 lb
4428	15	4425 (1)	4385 (2)	Clear	1.512"	4.500"	2.313"	1.500"	1.500"	1.950"	.903 lb
4428-Black	15	4425 (1)	4385 (2)	Black	1.512"	4.500"	2.313"	1.500"	1.500"	1.950"	.903 lb
25-4028	25	25-4025 (1)	25-4185 (2)	Clear	25.24mm	75.00mm	47.78mm	25.00mm	25.00mm	31.88mm	.1325 kg
25-4028-Black	25	25-4025 (1)	25-4185 (2)	Black	25.24mm	75.00mm	47.78mm	25.00mm	25.00mm	31.88mm	.1325 kg
40-4428	40	40-4425 (1)	40-4385 (2)	Clear	40.33mm	120.00mm	74.68mm	40.00mm	40.00mm	51.43mm	.4645 kg
40-4428-Black	40	40-4425 (1)	40-4385 (2)	Black	40.33mm	120.00mm	74.68mm	40.00mm	40.00mm	51.43mm	.4645 kg

Material Specifications

Material	Alloy*	Finish
Aluminum	6005A – T61	Anodize

* Or comparable

Included Mounting Hardware

Series	Nub to Profile		Arms to Nub		Arms to Profile	
	Part No.	Qty.	Part No.	Qty.	Part No.	Qty.
10	3306	1	3501	1	3356	2
15	3613	1	3500	1	3355	2
25	75-3415	1	25-3501	1	75-3509	2
40	75-3479	1	40-3500	1	75-3513	2

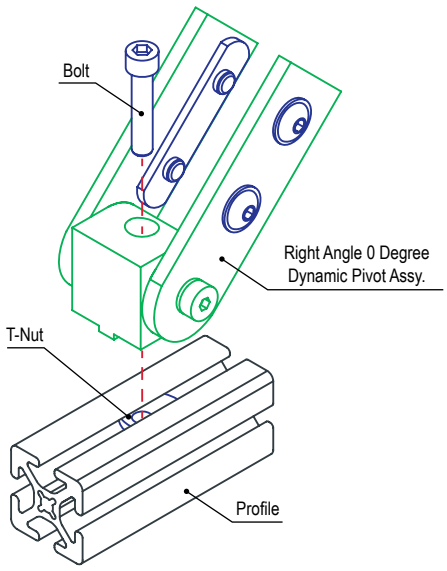

80/20 BUILD YOUR IDEA
More on 80/20® products available at 8020.net

Right Angle 90 Degree Dynamic Pivot Assembly with Dual Straight Arms

- Includes lubricated bronze bushings and nylon thrust washers; skim kit and hardware included
- Creates full axial motion ranging from 0-90 degrees; perpendicular to mounting profile

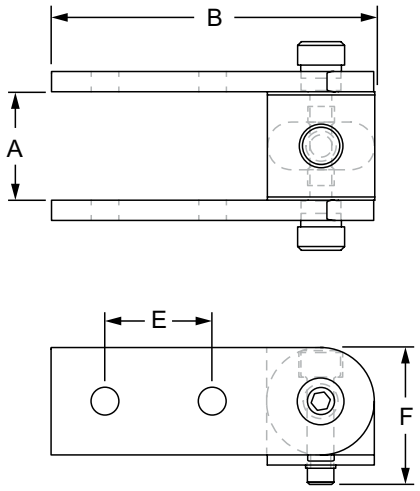

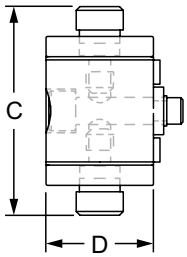

Part No.	Series	Nub (Qty.)	Arm (Qty.)	Color	A	B	C	D	E	F	Weight
4029	10	4026 (1)	4185 (2)	Clear	1.010"	3.010"	1.858"	1.000"	1.000"	1.275"	.311 lb
4029-Black	10	4026 (1)	4185 (2)	Black	1.010"	3.010"	1.858"	1.000"	1.000"	1.275"	.311 lb
4429	15	4426 (1)	4385 (2)	Clear	1.512"	4.500"	2.313"	1.500"	1.500"	1.950"	.903 lb
4429-Black	15	4426 (1)	4385 (2)	Black	1.512"	4.500"	2.313"	1.500"	1.500"	1.950"	.903 lb
25-4029	25	25-4026 (1)	25-4185 (2)	Clear	25.24mm	75.00mm	47.78mm	25.00mm	25.00mm	31.88mm	.1324 kg
25-4029-Black	25	25-4026 (1)	25-4185 (2)	Black	25.24mm	75.00mm	47.78mm	25.00mm	25.00mm	31.88mm	.1324 kg
40-4429	40	40-4426 (1)	40-4385 (2)	Clear	40.33mm	120.00mm	74.68mm	40.00mm	40.00mm	51.43mm	.4573 kg
40-4429-Black	40	40-4426 (1)	40-4385 (2)	Black	40.33mm	120.00mm	74.68mm	40.00mm	40.00mm	51.43mm	.4573 kg

Material Specifications

Material	Alloy*	Finish
Aluminum	6005A – T61	Anodize

* Or comparable

Included Mounting Hardware

Series	Nub to Profile		Arms to Nub		Arms to Profile	
	Part No.	Qty.	Part No.	Qty.	Part No.	Qty.
10	3306	1	3501	1	3356	2
15	3613	1	3500	1	3355	2
25	75-3415	1	25-3501	1	75-3509	2
40	75-3479	1	40-3500	1	75-3513	2

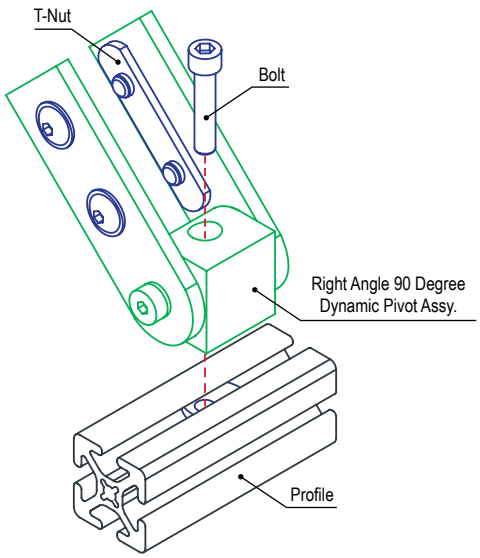

Bearings & Pivots

Right Angle Universal Dynamic Pivot Assembly with Dual Straight Arms

- Includes lubricated bronze bushings and nylon thrust washers; skim kit and hardware included
- Creates full axial motion ranging from 0-90 degrees; parallel or perpendicular to mounting profile

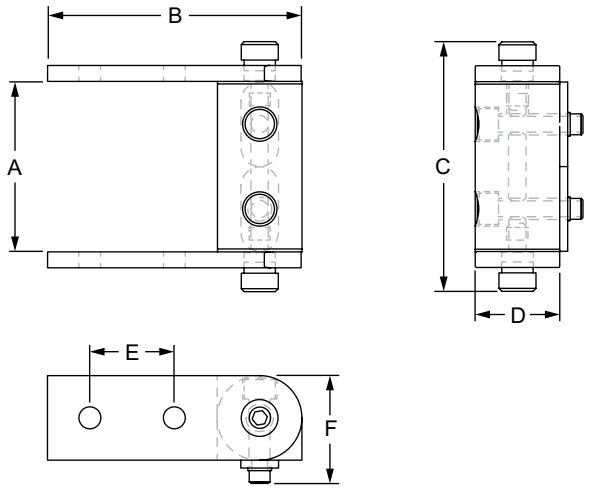

Part No.	Series	Nub (Qty.)	Arm (Qty.)	Color	A	B	C	D	E	F	Weight
4030	10	4027 (1)	4185 (2)	Clear	2.010"	3.010"	2.858"	1.000"	1.000"	1.275"	.417 lb
4030-Black	10	4027 (1)	4185 (2)	Black	2.010"	3.010"	2.858"	1.000"	1.000"	1.275"	.417 lb
4430	15	4427 (1)	4385 (2)	Clear	3.012"	4.500"	3.813"	1.500"	1.500"	1.950"	1.252 lb
4430-Black	15	4427 (1)	4385 (2)	Black	3.012"	4.500"	3.813"	1.500"	1.500"	1.950"	1.252 lb
25-4030	25	25-4027 (1)	25-4185 (2)	Clear	50.24mm	75.00mm	72.78mm	25.00mm	25.00mm	31.88mm	.1793 kg
25-4030-Black	25	25-4027 (1)	25-4185 (2)	Black	50.24mm	75.00mm	72.78mm	25.00mm	25.00mm	31.88mm	.1793 kg
40-4430	40	40-4427 (1)	40-4385 (2)	Clear	80.33mm	120.00mm	114.68mm	40.00mm	40.00mm	51.43mm	.6331 kg
40-4430-Black	40	40-4427 (1)	40-4385 (2)	Black	80.33mm	120.00mm	114.68mm	40.00mm	40.00mm	51.43mm	.6331 kg

Material Specifications

Material	Alloy*	Finish
Aluminum	6005A – T61	Anodize

* Or comparable

Included Mounting Hardware

Series	Nub to Profile		Arms to Nub		Arms to Profile	
	Part No.	Qty.	Part No.	Qty.	Part No.	Qty.
10	3306	2	3501	1	3356	2
15	3613	2	3500	1	3355	2
25	75-3415	2	25-3501	1	75-3509	2
40	75-3479	2	40-3500	1	75-3513	2

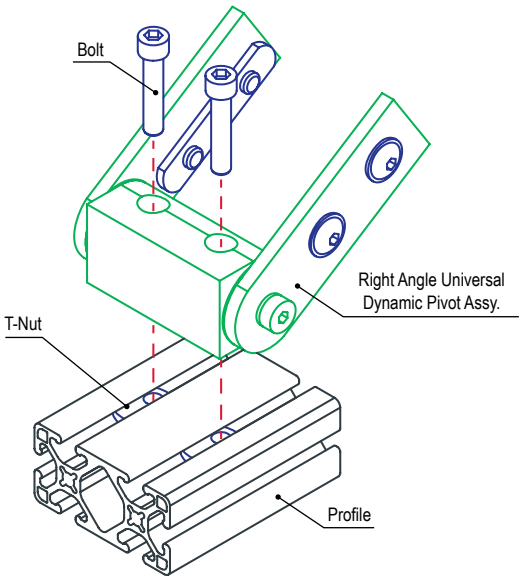

80/20 BUILD YOUR IDEA
More on 80/20® products available at 8020.net

Right Angle 0 Degree Dynamic Pivot Assembly with Dual "L" Arms

- Includes lubricated bronze bushings and nylon thrust washers; hardware included
- Creates full axial motion ranging from 0-90 degrees; perpendicular to mounting profile

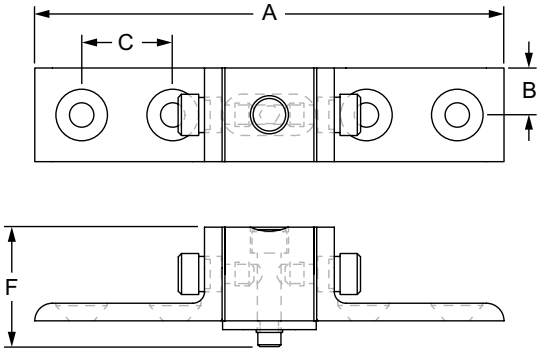

Part No.	Series	Nub (Qty.)	Arm (Qty.)	Color	A	B	C	D	E	F	Weight
4031	10	4025 (1)	4172 (2)	Clear	5.010"	.500"	1.000"	1.000"	1.060"	1.275"	.291 lb
4031-Black	10	4025 (1)	4172 (2)	Black	5.010"	.500"	1.000"	1.000"	1.060"	1.275"	.291 lb
4431	15	4425 (1)	4343 (2)	Clear	7.512"	.750"	1.500"	1.500"	1.600"	1.950"	.828 lb
4431-Black	15	4425 (1)	4343 (2)	Black	7.512"	.750"	1.500"	1.500"	1.600"	1.950"	.828 lb
25-4031	25	25-4025 (1)	25-4172 (2)	Clear	125.22mm	12.50mm	25.00mm	25.00mm	26.09mm	31.88mm	.1240 kg
25-4031-Black	25	25-4025 (1)	25-4172 (2)	Black	125.22mm	12.50mm	25.00mm	25.00mm	26.09mm	31.88mm	.1240 kg
40-4431	40	40-4425 (1)	40-4343 (2)	Clear	200.22mm	20.00mm	40.00mm	40.00mm	42.50mm	51.43mm	.4157 kg
40-4431-Black	40	40-4425 (1)	40-4343 (2)	Black	200.22mm	20.00mm	40.00mm	40.00mm	42.50mm	51.43mm	.4157 kg

Material Specifications

Material	Alloy*	Finish
Aluminum	6005A – T61	Anodize

* Or comparable

Included Mounting Hardware

Series	Nub to Profile		Arms to Nub		Arms to Profile	
	Part No.	Qty.	Part No.	Qty.	Part No.	Qty.
10	3306	1	3501	1	3356	4
15	3613	1	3500	1	3355	4
25	75-3415	1	25-3501	1	75-3509	4
40	75-3479	1	40-3500	1	75-3513	4

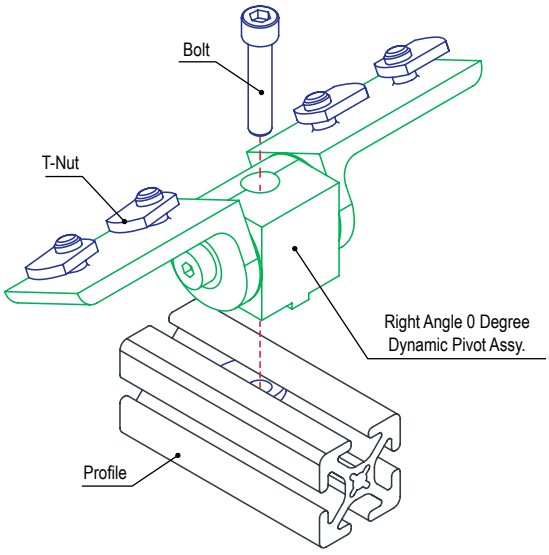

Bearings & Pivots

Right Angle 90 Degree Dynamic Pivot Assembly with Dual "L" Arms

- Includes lubricated bronze bushings and nylon thrust washers; hardware included
- Creates full axial motion ranging from 0-90 degrees; parallel to mounting profile

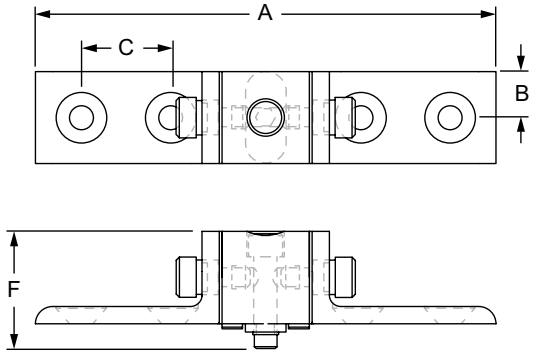

Part No.	Series	Nub (Qty.)	Arm (Qty.)	Color	A	B	C	D	E	F	Weight
4032	10	4026 (1)	4172 (2)	Clear	5.010"	.500"	1.000"	1.000"	1.000"	1.275"	.291 lb
4032-Black	10	4026 (1)	4172 (2)	Black	5.010"	.500"	1.000"	1.000"	1.000"	1.275"	.291 lb
4432	15	4426 (1)	4343 (2)	Clear	7.512"	.750"	1.500"	1.500"	1.500"	1.950"	.827 lb
4432-Black	15	4426 (1)	4343 (2)	Black	7.512"	.750"	1.500"	1.500"	1.500"	1.950"	.827 lb
25-4032	25	25-4026 (1)	25-4172 (2)	Clear	125.22mm	12.50mm	25.00mm	25.00mm	25.00mm	31.88mm	.1236 kg
25-4032-Black	25	25-4026 (1)	25-4172 (2)	Black	125.22mm	12.50mm	25.00mm	25.00mm	25.00mm	31.88mm	.1236 kg
40-4432	40	40-4426 (1)	40-4343 (2)	Clear	200.22mm	20.00mm	40.00mm	40.00mm	40.00mm	51.43mm	.4164 kg
40-4432-Black	40	40-4426 (1)	40-4343 (2)	Black	200.22mm	20.00mm	40.00mm	40.00mm	40.00mm	51.43mm	.4164 kg

Material Specifications

Material	Alloy*	Finish
Aluminum	6005A – T61	Anodize

* Or comparable

Included Mounting Hardware

Series	Nub to Profile		Arms to Nub		Arms to Profile	
	Part No.	Qty.	Part No.	Qty.	Part No.	Qty.
10	3306	1	3501	1	3414	4
15	3613	1	3500	1	3412	4
25	75-3415	1	25-3501	1	75-3541	4
40	75-3479	1	40-3500	1	75-3508	4

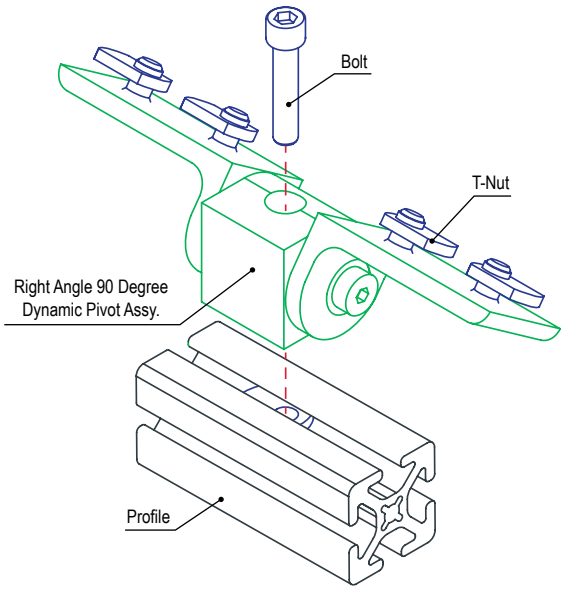

80/20 BUILD YOUR IDEA
More on 80/20® products available at 8020.net

Right Angle Universal Dynamic Pivot Assembly with Dual "L" Arms

- Includes lubricated bronze bushings and nylon thrust washers; hardware included
- Creates full axial motion ranging from 0-90 degrees; parallel or perpendicular to mounting profile

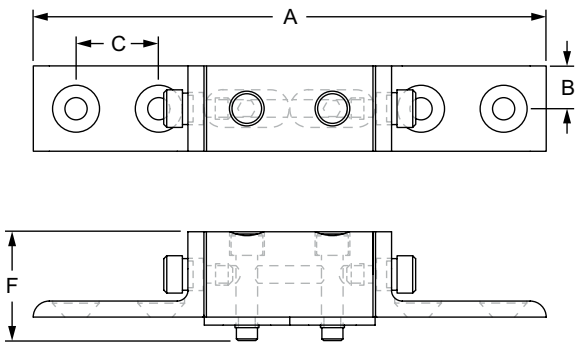

Part No.	Series	Nub (Qty.)	Arm (Qty.)	Color	A	B	C	D	E	F	Weight
4033	10	4027 (1)	4172 (2)	Clear	6.010"	.500"	1.000"	1.000"	1.000"	1.275"	.398 lb
4033-Black	10	4027 (1)	4172 (2)	Black	6.010"	.500"	1.000"	1.000"	1.000"	1.275"	.398 lb
4433	15	4427 (1)	4343 (2)	Clear	9.012"	.750"	1.500"	1.500"	1.500"	1.950"	1.201 lb
4433-Black	15	4427 (1)	4343 (2)	Black	9.012"	.750"	1.500"	1.500"	1.500"	1.950"	1.201 lb
25-4033	25	25-4027 (1)	25-4172 (2)	Clear	150.22mm	12.50mm	25.00mm	25.00mm	25.00mm	31.88mm	.1705 kg
25-4033-Black	25	25-4027 (1)	25-4172 (2)	Black	150.22mm	12.50mm	25.00mm	25.00mm	25.00mm	31.88mm	.1705 kg
40-4433	40	40-4427 (1)	40-4343 (2)	Clear	240.22mm	20.00mm	40.00mm	40.00mm	40.00mm	51.43mm	.5925 kg
40-4433-Black	40	40-4427 (1)	40-4343 (2)	Black	240.22mm	20.00mm	40.00mm	40.00mm	40.00mm	51.43mm	.5925 kg

Material Specifications

Material	Alloy*	Finish
Aluminum	6005A – T61	Anodize

* Or comparable

Included Mounting Hardware

Series	Nub to Profile		Arms to Nub		Arms to Profile	
	Part No.	Qty.	Part No.	Qty.	Part No.	Qty.
10	3306	2	3501	1	3414	4
15	3613	2	3500	1	3412	4
25	75-3415	2	25-3501	1	75-3541	4
40	75-3479	2	40-3500	1	75-3508	4

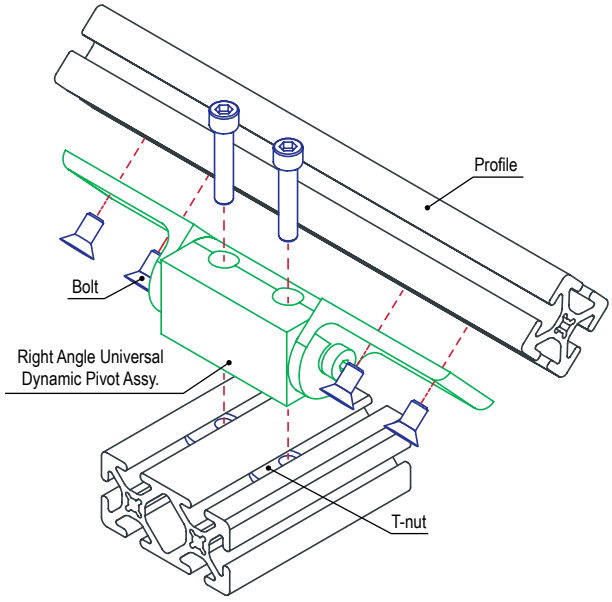

Bearings & Pivots

90 Degree Left Hand Pivot Bracket Plate

- Includes lubricated bronze bushing
- Provides a full 90 degrees of axial motion

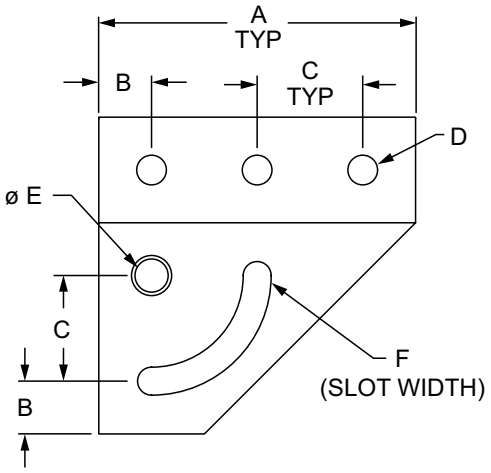

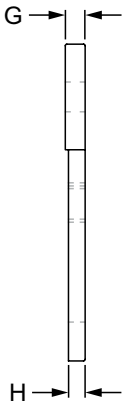

Part No.	Series	Color	A	B	C	D	E	F	G	H	Weight
4133	10	Clear	3.000"	.500"	1.000"	.281"	.312"	.265"	.188"	.158"	.100 lb
4133-Black	10	Black	3.000"	.500"	1.000"	.281"	.312"	.265"	.188"	.158"	.100 lb
4333	15	Clear	4.500"	.750"	1.500"	.328"	.375"	.328"	.250"	.220"	.335 lb
4333-Black	15	Black	4.500"	.750"	1.500"	.328"	.375"	.328"	.250"	.220"	.335 lb
25-4133	25	Clear	75.00mm	12.50mm	25.00mm	6.50mm	8.00mm	6.73mm	4.00mm	3.24mm	.0376 kg
25-4133-Black	25	Black	75.00mm	12.50mm	25.00mm	6.50mm	8.00mm	6.73mm	4.00mm	3.24mm	.0376kg
40-4333	40	Clear	120.00mm	20.00mm	40.00mm	8.33mm	10.00mm	8.33mm	6.00mm	5.19mm	.1550 kg
40-4333-Black	40	Black	120.00mm	20.00mm	40.00mm	8.33mm	10.00mm	8.33mm	6.00mm	5.19mm	.1550 kg

Material Specifications

Material	Alloy*	Finish
Aluminum	6005A – T61	Anodize

* Or comparable

Suggested Hardware (Mount to T-Slot)

Part No.	Series	Qty.	Bolt	T-Nut
3321	10	3	1/4-20 x 1/2" FBHSCS	Economy
3320	15	3	5/16-18 x 5/8" FBHSCS	
75-3404	25	3	M6 x 10mm BHSCS	
75-3422	40	3	M8 x 16mm BHSCS	

80/20 BUILD YOUR IDEA
More on 80/20® products available at 8020.net

90 Degree Right Hand Pivot Bracket Plate

- Includes lubricated bronze bushing
- Provides a full 90 degrees of axial motion

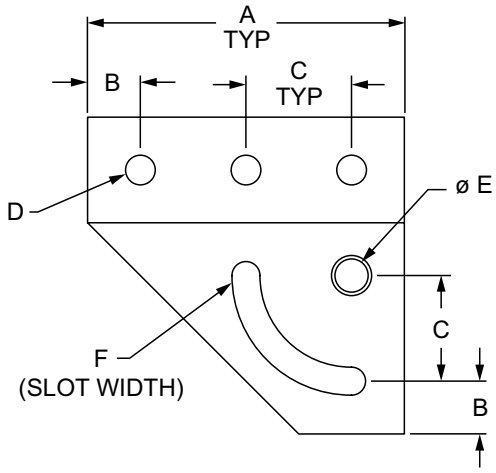

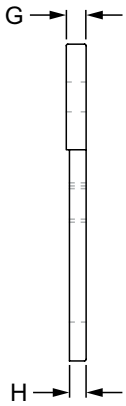

Part No.	Series	Color	A	B	C	D	E	F	G	H	Weight
4137	10	Clear	3.000"	.500"	1.000"	.281"	.312"	.265"	.188"	.158"	.102 lb
4137-Black	10	Black	3.000"	.500"	1.000"	.281"	.312"	.265"	.188"	.158"	.102 lb
4337	15	Clear	4.500"	.750"	1.500"	.328"	.375"	.328"	.250"	.220"	.334 lb
4337-Black	15	Black	4.500"	.750"	1.500"	.328"	.375"	.328"	.250"	.220"	.334 lb
25-4137	25	Clear	75.00mm	12.50mm	25.00mm	6.50mm	8.00mm	6.73mm	4.00mm	3.24mm	.0376 kg
25-4137-Black	25	Black	75.00mm	12.50mm	25.00mm	6.50mm	8.00mm	6.73mm	4.00mm	3.24mm	.0376 kg
40-4337	40	Clear	120.00mm	20.00mm	40.00mm	8.33mm	10.00mm	8.33mm	6.00mm	5.19mm	.1532 kg
40-4337-Black	40	Black	120.00mm	20.00mm	40.00mm	8.33mm	10.00mm	8.33mm	6.00mm	5.19mm	.1532 kg

Material Specifications

Material	Alloy*	Finish
Aluminum	6005A – T61	Anodize

* Or comparable

Suggested Hardware (Mount to T-Slot)

Part No.	Series	Qty.	Bolt	T-Nut
3321	10	3	1/4-20 x 1/2" FBHSCS	Economy
3320	15	3	5/16-18 x 5/8" FBHSCS	
75-3404	25	3	M6 x 10mm BHSCS	
75-3422	40	3	M8 x 16mm BHSCS	

Bearings & Pivots

90 Degree Left Hand Pivot Bracket Assembly with "L" Handle

- Includes lubricated bronze bushing, nylon thrust washers and shoulder bolt

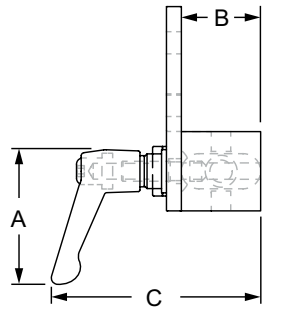

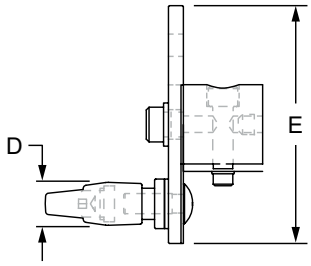

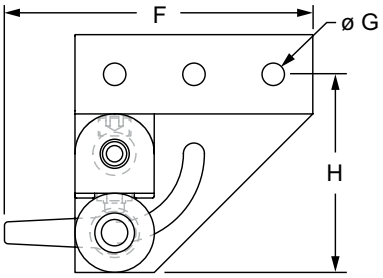

Part No.	Series	Plate (Qty.)	Nub (Qty.)	Handle (Qty.)	Color	A	B	C	D	E	F	G	H	Weight
4139	10	4133 (1)	4187 (1)	2796 (1)	Clear	2.041"	1.000"	2.754"	.541"	3.000"	4.270"	.281"	2.500"	.274 lb
4139-Black	10	4133 (1)	4187 (1)	2796 (1)	Black	2.041"	1.000"	2.754"	.541"	3.000"	4.270"	.281"	2.500"	.274 lb
4339	15	4333 (1)	4387 (1)	2797 (1)	Clear	3.505"	1.500"	4.015"	.871"	4.500"	6.820"	.328"	3.750"	1.029 lb
4339-Black	15	4333 (1)	4387 (1)	2797 (1)	Black	3.505"	1.500"	4.015"	.871"	4.500"	6.820"	.328"	3.750"	1.029 lb
25-4139	25	25-4133 (1)	25-4187 (1)	25-2796 (1)	Clear	51.84mm	25.00mm	69.24mm	13.77mm	75.00mm	107.46mm	6.50mm	62.50mm	.1144 kg
25-4139-Black	25	25-4133 (1)	25-4187 (1)	25-2796 (1)	Black	51.84mm	25.00mm	69.24mm	13.77mm	75.00mm	107.46mm	6.50mm	62.50mm	.1144 kg
40-4339	40	40-4333 (1)	40-4387 (1)	40-2797 (1)	Clear	89.03mm	40.00mm	103.53mm	22.12mm	120.00mm	177.98mm	8.48mm	100.00mm	.4944 kg
40-4339-Black	40	40-4333 (1)	40-4387 (1)	40-2797 (1)	Black	89.03mm	40.00mm	103.53mm	22.12mm	120.00mm	177.98mm	8.48mm	100.00mm	.4944 kg

Material Specifications

Material	Alloy*	Finish
Aluminum	6005A – T61	Anodize

* Or comparable

Suggested Hardware (Mount to T-Slot)

Part No.	Series	Qty.	Bolt	T-Nut
3321	10	3	1/4-20 x 1/2" FBHSCS	Economy
3320	15	3	5/16-18 x 5/8" FBHSCS	
75-3404	25	3	M6 x 10mm BHSCS	
75-3422	40	3	M8 x 16mm BHSCS	

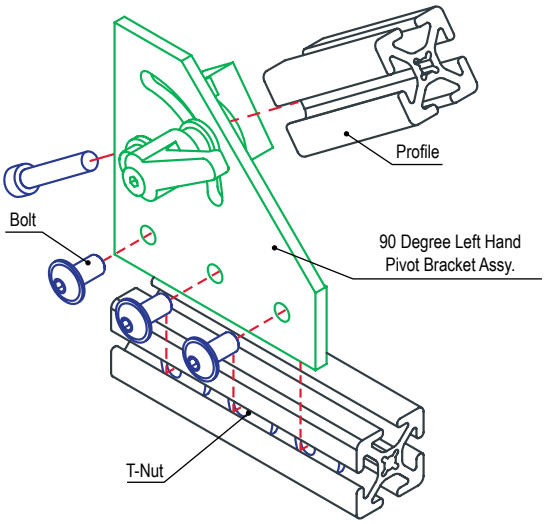

80/20 BUILD YOUR IDEA
More on 80/20® products
available at 8020.net

90 Degree Left Hand Pivot Bracket Assembly with "T" Handle

- Includes lubricated bronze bushing, nylon thrust washers and shoulder bolt

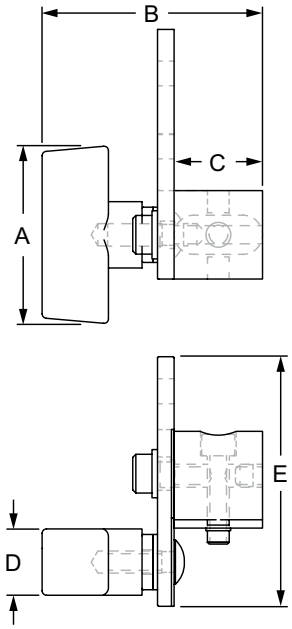

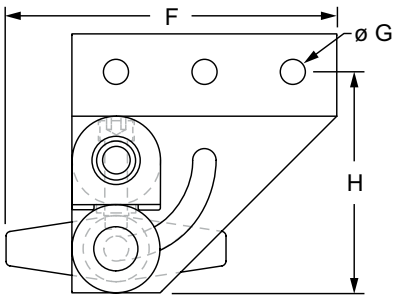

Part No.	Series	Plate (Qty.)	Nub (Qty.)	Handle (Qty.)	Color	A	B	C	D	E	F	G	H	Weight
4142	10	4133 (1)	4187 (1)	2798 (1)	Clear	2.490"	2.618"	1.000"	.750"	3.000"	3.745"	.281"	2.500"	.299 lb
4142-Black	10	4133 (1)	4187 (1)	2798 (1)	Black	2.490"	2.618"	1.000"	.750"	3.000"	3.745"	.281"	2.500"	.299 lb
4342	15	4333 (1)	4387 (1)	2799 (1)	Clear	2.490"	3.102"	1.500"	.750"	4.500"	5.245"	.328"	3.750"	.789 lb
4342-Black	15	4333 (1)	4387 (1)	2799 (1)	Black	2.490"	3.102"	1.500"	.750"	4.500"	5.245"	.328"	3.750"	.789 lb

Material Specifications

Material	Alloy*	Finish
Aluminum	6005A – T61	Anodize

* Or comparable

Suggested Hardware (Mount to T-Slot)

Part No.	Series	Qty.	Bolt	T-Nut
3321	10	3	1/4-20 x 1/2" FBHSCS	Economy
3320	15	3	5/16-18 x 5/8" FBHSCS	

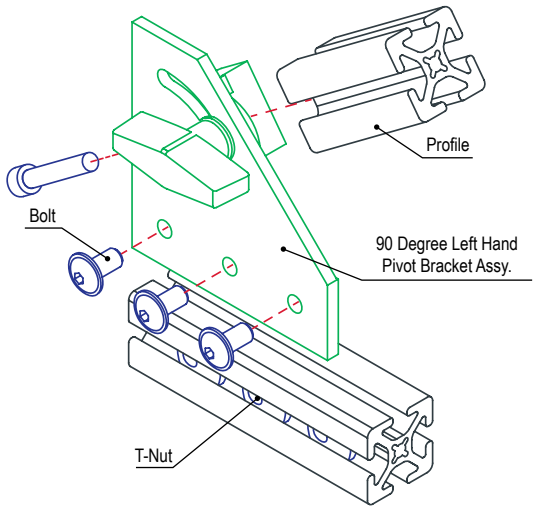

Bearings & Pivots

90 Degree Right Hand Pivot Bracket Assembly with "L" Handle

- Includes lubricated bronze bushing, nylon thrust washers and shoulder bolt

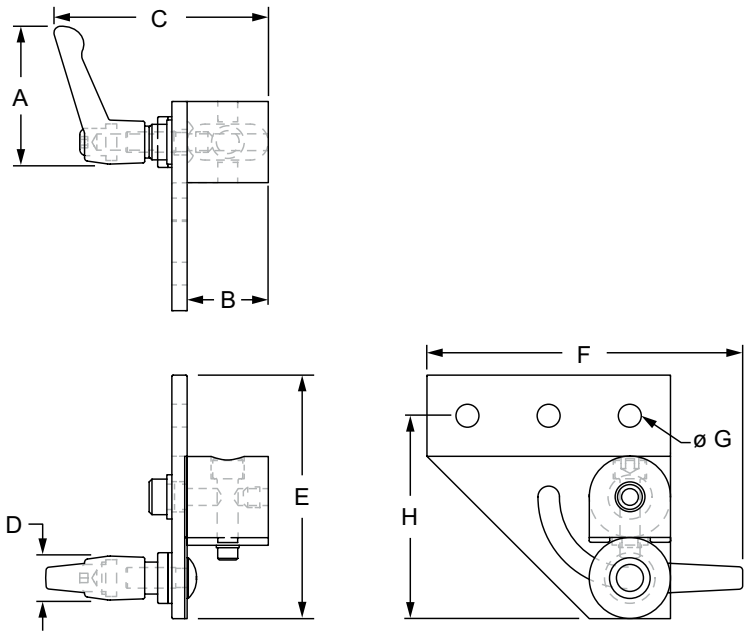

Part No.	Series	Plate (Qty.)	Nub (Qty.)	Handle (Qty.)	Color	A	B	C	D	E	F	G	H	Weight
4148	10	4137 (1)	4187 (1)	2796 (1)	Clear	2.041"	1.000"	2.754"	.541"	3.000"	4.270"	.281"	2.500"	.277 lb
4148-Black	10	4137 (1)	4187 (1)	2796 (1)	Black	2.041"	1.000"	2.754"	.541"	3.000"	4.270"	.281"	2.500"	.277 lb
4348	15	4337 (1)	4387 (1)	2797 (1)	Clear	3.505"	1.500"	4.015"	.871"	4.500"	6.820"	.328"	3.750"	1.018 lb
4348-Black	15	4337 (1)	4387 (1)	2797 (1)	Black	3.505"	1.500"	4.015"	.871"	4.500"	6.820"	.328"	3.750"	1.018 lb
25-4148	25	25-4137 (1)	25-4187 (1)	25-2796 (1)	Clear	51.84mm	25.00mm	69.24mm	13.77mm	75.00mm	107.46mm	6.50mm	62.50mm	.1146 kg
25-4148-Black	25	25-4137 (1)	25-4187 (1)	25-2796 (1)	Black	51.84mm	25.00mm	69.24mm	13.77mm	75.00mm	107.46mm	6.50mm	62.50mm	.1146 kg
40-4348	40	40-4337 (1)	40-4387 (1)	40-2797 (1)	Clear	89.03mm	40.00mm	103.53mm	22.12mm	120.00mm	177.98mm	8.48mm	100.00mm	.4927 kg
40-4348-Black	40	40-4337 (1)	40-4387 (1)	40-2797 (1)	Black	89.03mm	40.00mm	103.53mm	22.12mm	120.00mm	177.98mm	8.48mm	100.00mm	.4927 kg

Material Specifications

Material	Alloy*	Finish
Aluminum	6005A – T61	Anodize

* Or comparable

Suggested Hardware (Mount to T-Slot)

Part No.	Series	Qty.	Bolt	T-Nut
3321	10	3	1/4-20 x 1/2" FBHSCS	Economy
3320	15	3	5/16-18 x 5/8" FBHSCS	
75-3404	25	3	M6 x 10mm BHSCS	
75-3422	40	3	M8 x 16mm BHSCS	

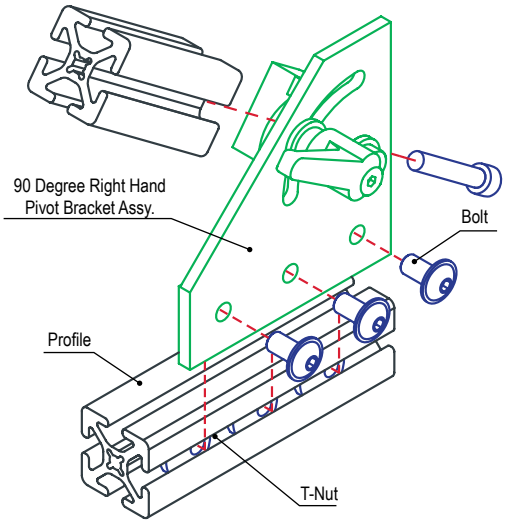

80/20 BUILD YOUR IDEA
More on 80/20® products available at 8020.net

90 Degree Right Hand Pivot Bracket Assembly with "T" Handle

- Includes lubricated bronze bushing, nylon thrust washers and shoulder bolt

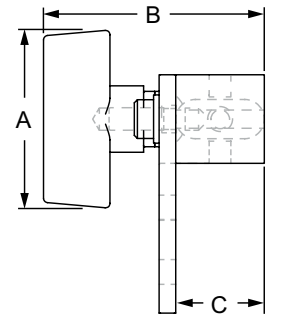

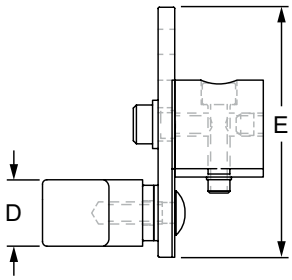

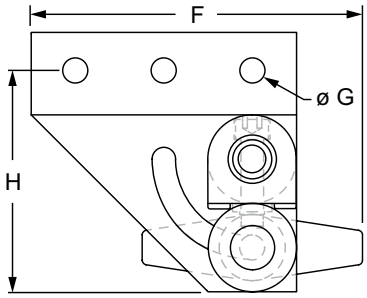

Part No.	Series	Plate (Qty.)	Nub (Qty.)	Handle (Qty.)	Color	A	B	C	D	E	F	G	H	Weight
4147	10	4137 (1)	4187 (1)	2798 (1)	Clear	2.490"	2.618"	1.000"	.750"	3.000"	3.745"	.281"	2.500"	.299 lb
4147-Black	10	4137 (1)	4187 (1)	2798 (1)	Black	2.490"	2.618"	1.000"	.750"	3.000"	3.745"	.281"	2.500"	.299 lb
4347	15	4337 (1)	4387 (1)	2799 (1)	Clear	2.490"	3.102"	1.500"	.750"	4.500"	5.245"	.328"	3.750"	.789 lb
4347-Black	15	4337 (1)	4387 (1)	2799 (1)	Black	2.490"	3.102"	1.500"	.750"	4.500"	5.245"	.328"	3.750"	.789 lb

Material Specifications

Material	Alloy*	Finish
Aluminum	6005A – T61	Anodize

* Or comparable

Suggested Hardware (Mount to T-Slot)

Part No.	Series	Qty.	Bolt	T-Nut
3321	10	3	1/4-20 x 1/2" FBHSCS	Economy
3320	15	3	5/16-18 x 5/8" FBHSCS	

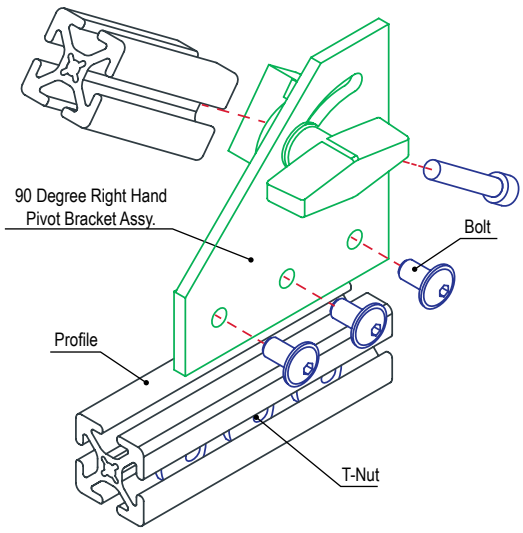

Bearings & Pivots

90 Degree Double Pivot Bracket Assembly with "L" Handles

- Includes lubricated bronze bushings, nylon thrust washers and shoulder bolts

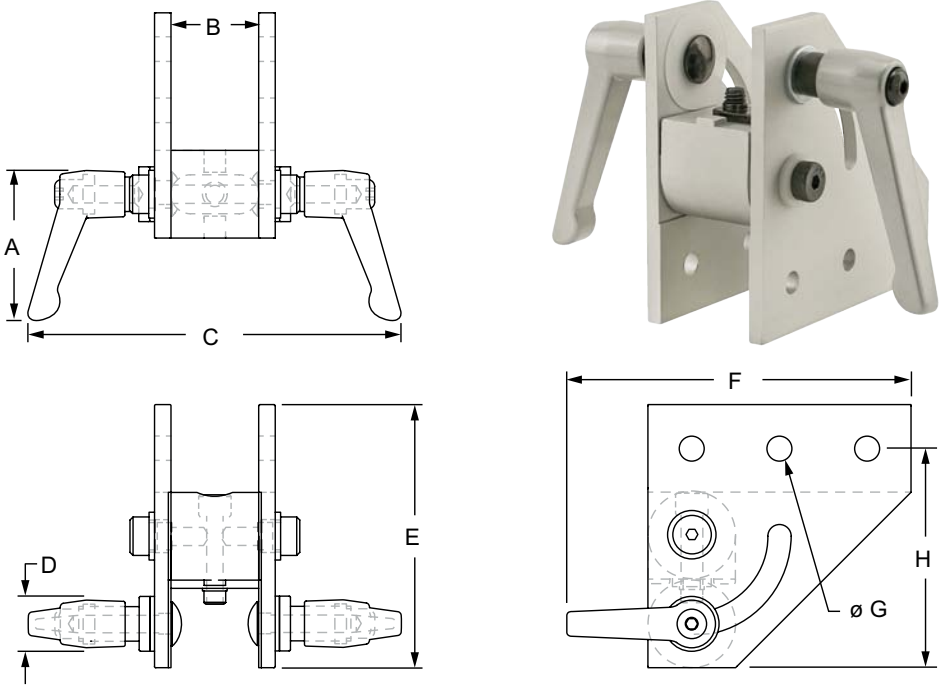

Part No.	Series	Plate (Qty.)	Nub (Qty.)	Handle (Qty.)	Color	A	B	C	D	E	F	G	H	Weight
4116	10	4133 (1) 4137 (1)	4187 (1)	2796 (2)	Clear	2.041"	1.000"	4.508"	.541"	3.000"	4.270"	.281"	2.500"	.452 lb
4116-Black	10	4133 (1) 4137 (1)	4187 (1)	2796 (2)	Black	2.041"	1.000"	4.508"	.541"	3.000"	4.270"	.281"	2.500"	.452 lb
4317	15	4333 (1) 4337 (1)	4387 (1)	2797 (2)	Clear	3.505"	1.500"	6.530"	.871"	4.500"	6.820"	.328"	3.750"	1.721 lb
4317-Black	15	4333 (1) 4337 (1)	4387 (1)	2797 (2)	Black	3.505"	1.500"	6.530"	.871"	4.500"	6.820"	.328"	3.750"	1.721 lb
25-4116	25	25-4133 (1) 25-4137 (1)	25-4187 (1)	25-2796 (2)	Clear	51.84mm	25.00mm	113.48mm	13.77mm	75.00mm	107.46mm	6.50mm	62.50mm	.1845 kg
25-4116-Black	25	25-4133 (1) 25-4137 (1)	25-4187 (1)	25-2796 (2)	Black	51.84mm	25.00mm	113.48mm	13.77mm	75.00mm	107.46mm	6.50mm	62.50mm	.1845 kg
40-4317	40	40-4333 (1) 40-4337 (1)	40-4387 (1)	40-2797 (2)	Clear	89.03mm	40.00mm	167.06mm	22.12mm	120.00mm	177.98mm	8.48mm	100.00mm	.8179 kg
40-4317-Black	40	40-4333 (1) 40-4337 (1)	40-4387 (1)	40-2797 (2)	Black	89.03mm	40.00mm	167.06mm	22.12mm	120.00mm	177.98mm	8.48mm	100.00mm	.8179 kg

Material Specifications

Material	Alloy*	Finish
Aluminum	6005A – T61	Anodize

* Or comparable

Suggested Hardware (Mount to T-Slot)

Part No.	Series	Qty.	Bolt	T-Nut
3321	10	6	1/4-20 x 1/2" FBHSCS	Economy
3320	15	6	5/16-18 x 5/8" FBHSCS	
75-3404	25	6	M6 x 10mm BHSCS	
75-3422	40	6	M8 x 16mm BHSCS	

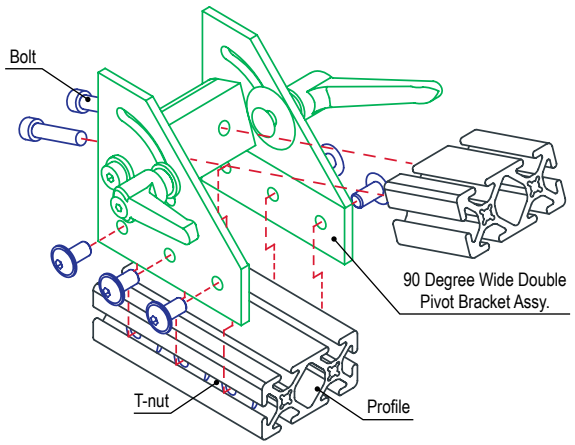

80/20 BUILD YOUR IDEA
More on 80/20® products available at 8020.net

90 Degree Double Pivot Bracket Assembly with "T" Handles

- Includes lubricated bronze bushings, nylon thrust washers and shoulder bolts

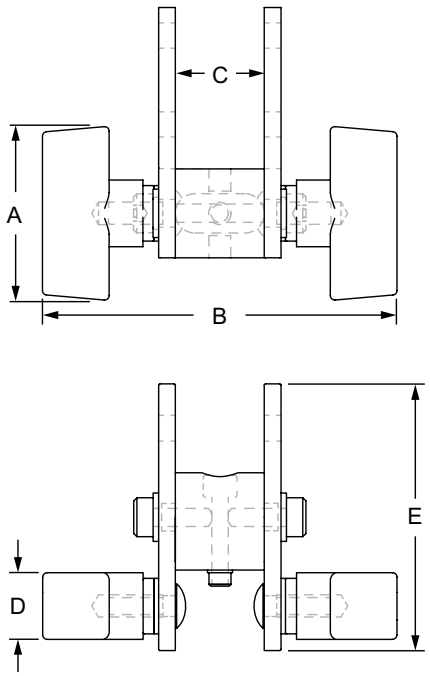

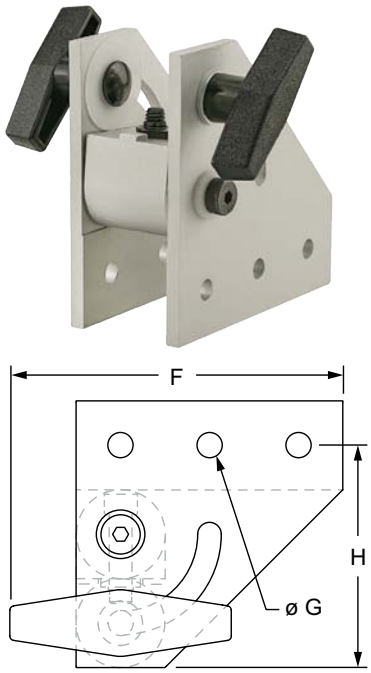

Part No.	Series	Plate (Qty.)	Nub (Qty.)	Handle (Qty.)	Color	A	B	C	D	E	F	G	H	Weight
4130	10	4133 (1) 4137 (1)	4187 (1)	2798 (2)	Clear	2.490"	4.236"	1.000"	.750"	3.000"	3.745"	.281"	2.500"	.500 lb
4130-Black	10	4133 (1) 4137 (1)	4187 (1)	2798 (2)	Black	2.490"	4.236"	1.000"	.750"	3.000"	3.745"	.281"	2.500"	.500 lb
4319	15	4333 (1) 4337 (1)	4387 (1)	2799 (2)	Clear	2.490"	4.704"	1.500"	.750"	4.500"	5.245"	.328"	3.750"	.964 lb
4319-Black	15	4333 (1) 4337 (1)	4387 (1)	2799 (2)	Black	2.490"	4.704"	1.500"	.750"	4.500"	5.245"	.328"	3.750"	.964 lb

Material Specifications

Material	Alloy*	Finish
Aluminum	6005A – T61	Anodize

* Or comparable

Suggested Hardware (Mount to T-Slot)

Part No.	Series	Qty.	Bolt	T-Nut
3321	10	6	1/4-20 x 1/2" FBHSCS	Economy
3320	15	6	5/16-18 x 5/8" FBHSCS	

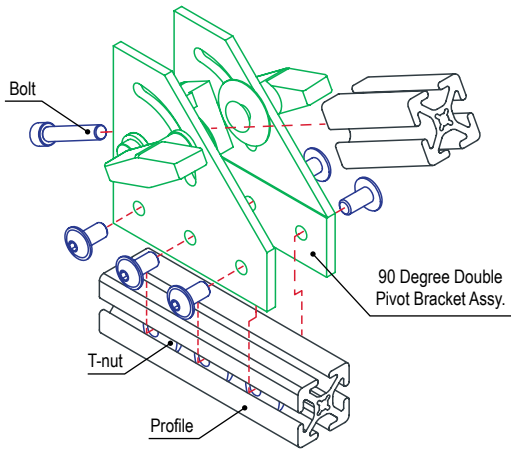

Bearings & Pivots

90 Degree Wide Double Pivot Bracket Assembly with "L" Handles

- Includes lubricated bronze bushings, nylon thrust washers and shoulder bolts

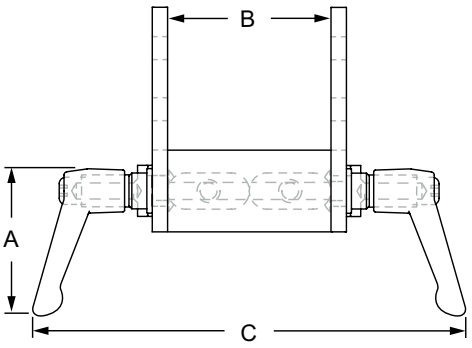

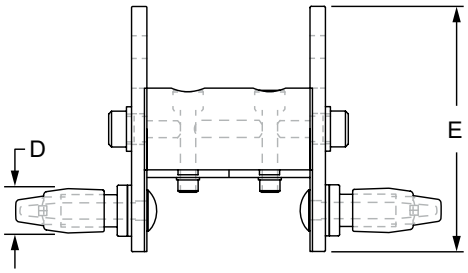

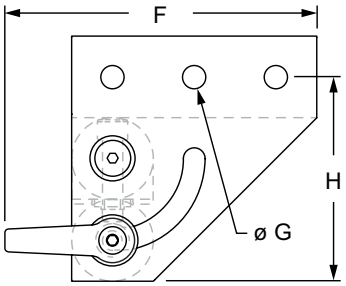

Part No.	Series	Plate (Qty.)	Nub (Qty.)	Handle (Qty.)	Color	A	B	C	D	E	F	G	H	Weight
4124	10	4133 (1) 4137 (1)	4186 (1)	2796 (2)	Clear	2.041"	2.000"	5.508"	.541"	3.000"	4.270"	.281"	2.500"	.550 lb
4124-Black	10	4133 (1) 4137 (1)	4186 (1)	2796 (2)	Black	2.041"	2.000"	5.508"	.541"	3.000"	4.270"	.281"	2.500"	.550 lb
4318	15	4333 (1) 4337 (1)	4386 (1)	2797 (2)	Clear	3.505"	3.000"	8.030"	.871"	4.500"	6.820"	.328"	3.750"	2.053 lb
4318-Black	15	4333 (1) 4337 (1)	4386 (1)	2797 (2)	Black	3.505"	3.000"	8.030"	.871"	4.500"	6.820"	.328"	3.750"	2.053 lb
25-4124	25	25-4133 (1) 25-4137 (1)	25-4186 (1)	25-2796 (2)	Clear	51.84mm	50.00mm	138.48mm	13.77mm	75.00mm	107.46mm	6.50mm	62.50mm	.2287 kg
25-4124-Black	25	25-4133 (1) 25-4137 (1)	25-4186 (1)	25-2796 (2)	Black	51.84mm	50.00mm	138.48mm	13.77mm	75.00mm	107.46mm	6.50mm	62.50mm	.2287 kg
40-4318	40	40-4333 (1) 40-4337 (1)	40-4386 (1)	40-2797 (2)	Clear	89.03mm	80.00mm	207.06mm	22.12mm	120.00mm	177.98mm	8.48mm	100.00mm	.9980 kg
40-4318-Black	40	40-4333 (1) 40-4337 (1)	40-4386 (1)	40-2797 (2)	Black	89.03mm	80.00mm	207.06mm	22.12mm	120.00mm	177.98mm	8.48mm	100.00mm	.9980kg

Material Specifications

Material	Alloy*	Finish
Aluminum	6005A – T61	Anodize

* Or comparable

Suggested Hardware (Mount to T-Slot)

Part No.	Series	Qty.	Bolt	T-Nut
3321	10	6	1/4-20 x 1/2" FBHSCS	Economy
3320	15	6	5/16-18 x 5/8" FBHSCS	
75-3404	25	6	M6 x 10mm BHSCS	
75-3422	40	6	M8 x 16mm BHSCS	

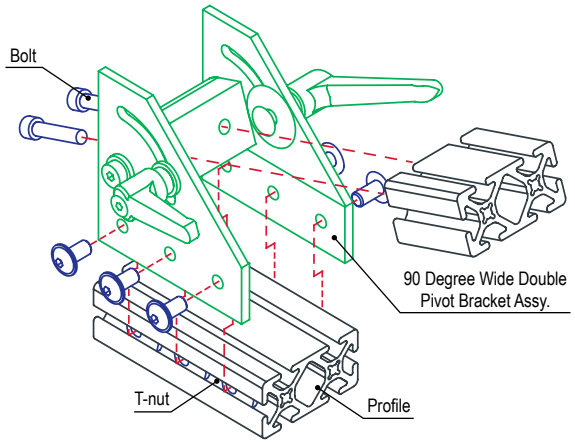

80/20 BUILD YOUR IDEA
More on 80/20® products available at 8020.net

90 Degree Wide Double Pivot Bracket Assembly with "T" Handles

- Includes lubricated bronze bushings, nylon thrust washers and shoulder bolts

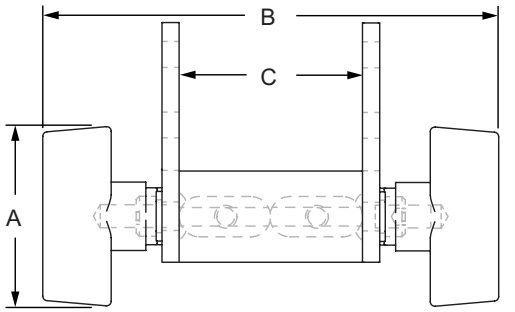

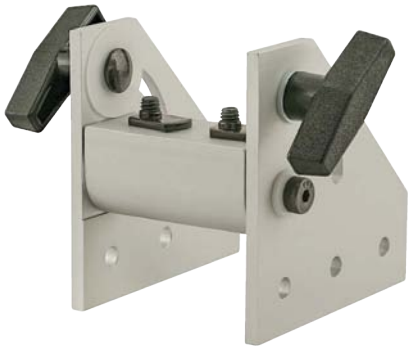

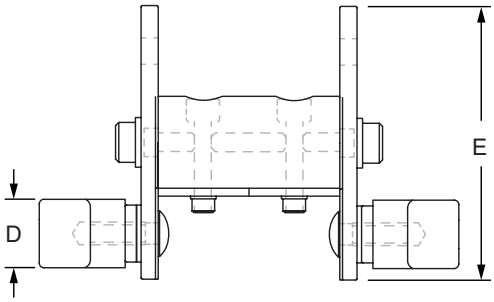

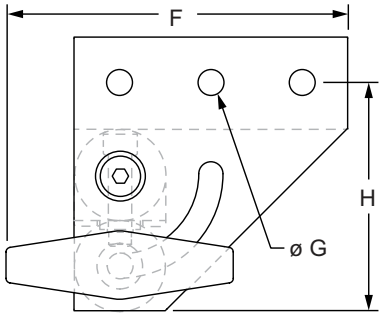

Part No.	Series	Plate (Qty.)	Nub (Qty.)	Handle (Qty.)	Color	A	B	C	D	E	F	G	H	Weight
4131	10	4133 (1) 4137 (1)	4186 (1)	2798 (2)	Clear	2.490"	5.236"	2.000"	.750"	3.000"	3.745"	.257"	2.500"	.616 lb
4131-Black	10	4133 (1) 4137 (1)	4186 (1)	2798 (2)	Black	2.490"	5.236"	2.000"	.750"	3.000"	3.745"	.257"	2.500"	.616 lb
4324	15	4333 (1) 4337 (1)	4386 (1)	2799 (2)	Clear	2.490"	6.204"	3.000"	.750"	4.500"	5.245"	.328"	3.750"	1.554 lb
4324-Black	15	4333 (1) 4337 (1)	4386 (1)	2799 (2)	Black	2.490"	6.204"	3.000"	.750"	4.500"	5.245"	.328"	3.750"	1.554 lb

Material Specifications

Material	Alloy*	Finish
Aluminum	6005A – T61	Anodize

* Or comparable

Suggested Hardware (Mount to T-Slot)

Part No.	Series	Qty.	Bolt	T-Nut
3321	10	6	1/4-20 x 1/2" FBHSCS	Economy
3320	15	6	5/16-18 x 5/8" FBHSCS	

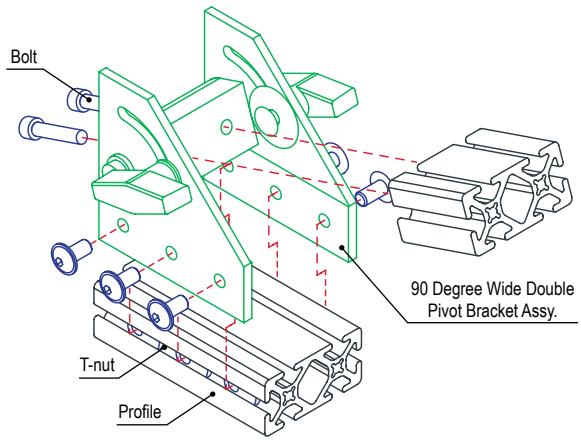

Bearings & Pivots

180 Degree Pivot Bracket

- Includes lubricated bronze bushing
- Provides a full 180 degrees of axial motion

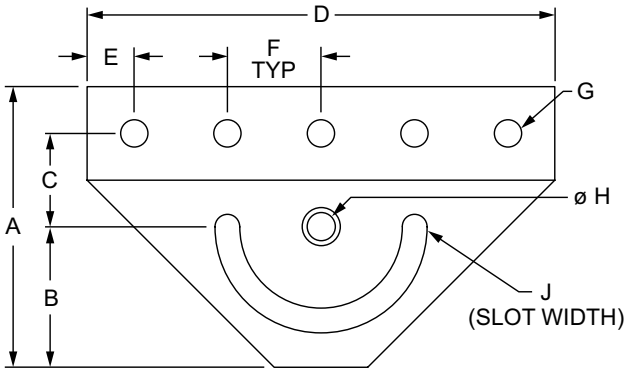

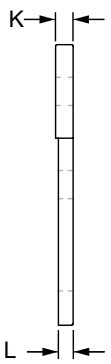

Part No.	Series	Color	A	B	C	D	E	F	G	H	J	K	L	Weight
4024	10	Clear	3.000"	1.500"	1.000"	5.000"	.500"	1.000"	.281"	.312"	.265"	.188"	.158"	.156 lb
4024-Black	10	Black	3.000"	1.500"	1.000"	5.000"	.500"	1.000"	.281"	.312"	.265"	.188"	.158"	.156 lb
4424	15	Clear	4.500"	2.250"	1.500"	7.500"	.750"	1.500"	.328"	.375"	.328"	.250"	.220"	.510 lb
4424-Black	15	Black	4.500"	2.250"	1.500"	7.500"	.750"	1.500"	.328"	.375"	.328"	.250"	.220"	.510 lb
25-4024	25	Clear	75.00mm	37.50mm	25.00mm	125.00mm	12.50mm	25.00mm	6.50mm	8.00mm	6.73mm	4.00mm	3.24mm	.0600 kg
25-4024-Black	25	Black	75.00mm	37.50mm	25.00mm	125.00mm	12.50mm	25.00mm	6.50mm	8.00mm	6.73mm	4.00mm	3.24mm	.0600 kg
40-4424	40	Clear	120.00mm	60.00mm	40.00mm	200.00mm	20.00mm	40.00mm	8.33mm	10.00mm	8.33mm	6.00mm	5.19mm	.2429 kg
40-4424-Black	40	Black	120.00mm	60.00mm	40.00mm	200.00mm	20.00mm	40.00mm	8.33mm	10.00mm	8.33mm	6.00mm	5.19mm	.2429 kg

Material Specifications

Material	Alloy*	Finish
Aluminum	6005A – T61	Anodize

* Or comparable

Suggested Hardware (Mount to T-Slot)

Part No.	Series	Qty.	Bolt	T-Nut
3321	10	5	1/4-20 x 1/2" FBHSCS	Economy
3320	15	5	5/16-18 x 5/8" FBHSCS	
75-3404	25	5	M6 x 10mm BHSCS	
75-3422	40	5	M8 x 16mm BHSCS	

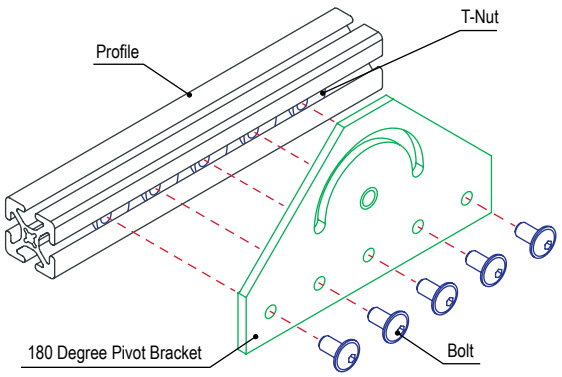

80/20 BUILD YOUR IDEA
More on 80/20® products available at 8020.net

180 Degree Pivot Bracket Assembly with "L" Handle

- Includes lubricated bronze bushing, nylon thrust washers and shoulder bolt

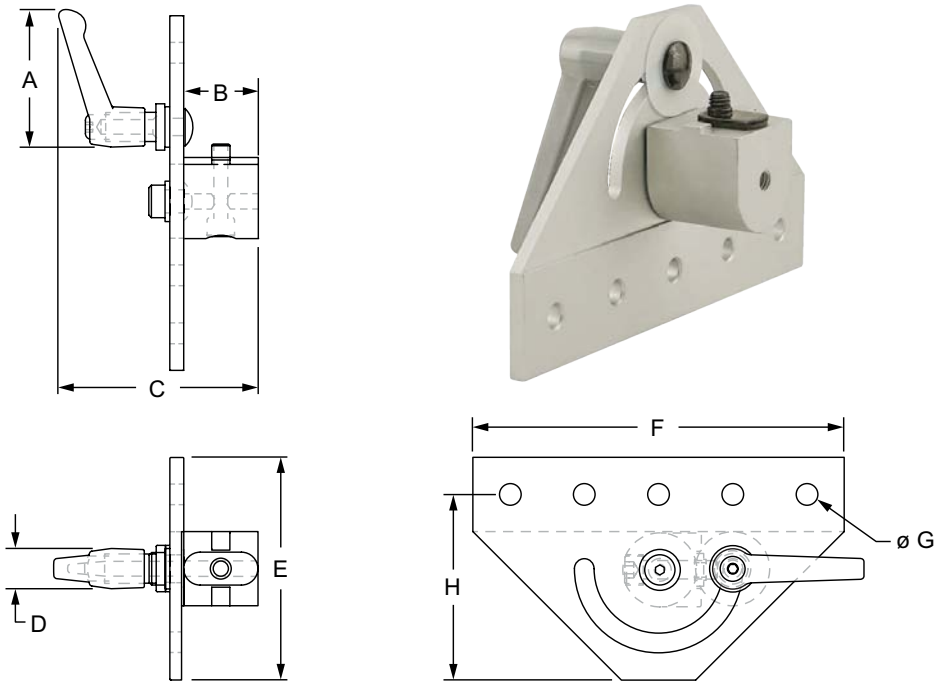

Part No.	Series	Plate (Qty.)	Nub (Qty.)	Handle (Qty.)	Color	A	B	C	D	E	F	G	H	Weight
4051	10	4024 (1)	4187 (1)	2796 (1)	Clear	2.041"	1.000"	2.755"	.541"	3.000"	5.000"	.281"	2.500"	.339 lb
4051-Black	10	4024 (1)	4187 (1)	2796 (1)	Black	2.041"	1.000"	2.755"	.541"	3.000"	5.000"	.281"	2.500"	.339 lb
4451	15	4424 (1)	4387 (1)	2797 (1)	Clear	3.505"	1.500"	4.015"	.871"	4.500"	7.500"	.328"	3.750"	1.199 lb
4451-Black	15	4424 (1)	4387 (1)	2797 (1)	Black	3.505"	1.500"	4.015"	.871"	4.500"	7.500"	.328"	3.750"	1.199 lb
25-4051	25	25-4024 (1)	25-4187 (1)	25-2796 (1)	Clear	51.84mm	25.00mm	69.24mm	13.77mm	75.00mm	125.00mm	6.50mm	62.50mm	.1375 kg
25-4051-Black	25	25-4024 (1)	25-4187 (1)	25-2796 (1)	Black	51.84mm	25.00mm	69.24mm	13.77mm	75.00mm	125.00mm	6.50mm	62.50mm	.1375 kg
40-4451	40	40-4424 (1)	40-4387 (1)	40-2797 (1)	Clear	89.03mm	40.00mm	103.53mm	22.12mm	120.00mm	200.00mm	8.48mm	100.00mm	.5824 kg
40-4451-Black	40	40-4424 (1)	40-4387 (1)	40-2797 (1)	Black	89.03mm	40.00mm	103.53mm	22.12mm	120.00mm	200.00mm	8.48mm	100.00mm	.5824 kg

Material Specifications

Material	Alloy*	Finish
Aluminum	6005A – T61	Anodize

* Or comparable

Suggested Hardware (Mount to T-Slot)

Part No.	Series	Qty.	Bolt	T-Nut
3321	10	5	1/4-20 x 1/2" FBHSCS	Economy
3320	15	5	5/16-18 x 5/8" FBHSCS	
75-3404	25	5	M6 x 10mm BHSCS	
75-3422	40	5	M8 x 16mm BHSCS	

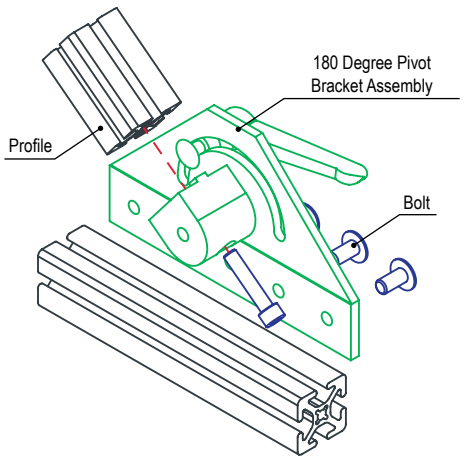

Bearings & Pivots

180 Degree Double Pivot Bracket Assembly with "L" Handles

- Includes lubricated bronze bushings, nylon thrust washers and shoulder bolts

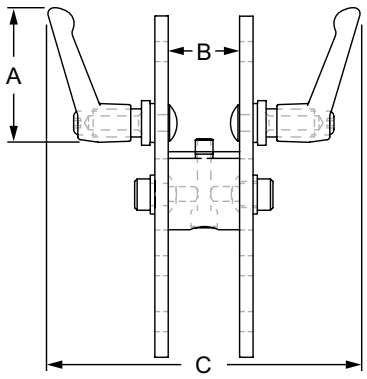

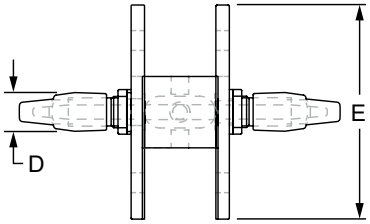

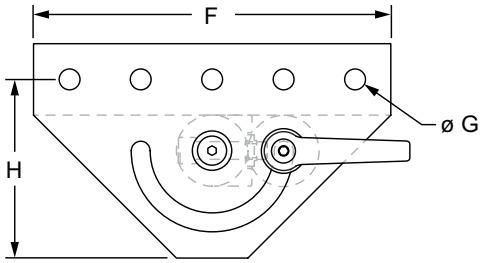

Part No.	Series	Plate (Qty.)	Nub (Qty.)	Handle (Qty.)	Color	A	B	C	D	E	F	G	H	Weight
4053	10	4024 (2)	4187 (1)	2796 (2)	Clear	2.041"	1.000"	4.510"	.541"	3.000"	5.000"	.281"	2.500"	.504 lb
4053-Black	10	4024 (2)	4187 (1)	2796 (2)	Black	2.041"	1.000"	4.510"	.541"	3.000"	5.000"	.281"	2.500"	.504 lb
4453	15	4424 (2)	4387 (1)	2797 (2)	Clear	3.505"	1.500"	6.530"	.871"	4.500"	7.500"	.328"	3.750"	2.074 lb
4453-Black	15	4424 (2)	4387 (1)	2797 (2)	Black	3.505"	1.500"	6.530"	.871"	4.500"	7.500"	.328"	3.750"	2.074 lb
25-4053	25	25-4024 (2)	25-4187 (1)	25-2796 (2)	Clear	51.84mm	25.00mm	113.48mm	13.77mm	75.00mm	125.00mm	6.50mm	62.50mm	.2304 kg
25-4053-Black	25	25-4024 (2)	25-4187 (1)	25-2796 (2)	Black	51.84mm	25.00mm	113.48mm	13.77mm	75.00mm	125.00mm	6.50mm	62.50mm	.2304 kg
40-4453	40	40-4424 (2)	40-4387 (1)	40-2797 (2)	Clear	89.03mm	40.00mm	167.06mm	22.12mm	120.00mm	200.00mm	8.48mm	100.00mm	.9970 kg
40-4453-Black	40	40-4424 (2)	40-4387 (1)	40-2797 (2)	Black	89.03mm	40.00mm	167.06mm	22.12mm	120.00mm	200.00mm	8.48mm	100.00mm	.9970 kg

Material Specifications

Material	Alloy*	Finish
Aluminum	6005A – T61	Anodize

* Or comparable

Suggested Hardware (Mount to T-Slot)

Part No.	Series	Qty.	Bolt	T-Nut
3321	10	10	1/4-20 x 1/2" FBHSCS	Economy
3320	15	10	5/16-18 x 5/8" FBHSCS	
75-3404	25	10	M6 x 10mm BHSCS	
75-3422	40	10	M8 x 16mm BHSCS	

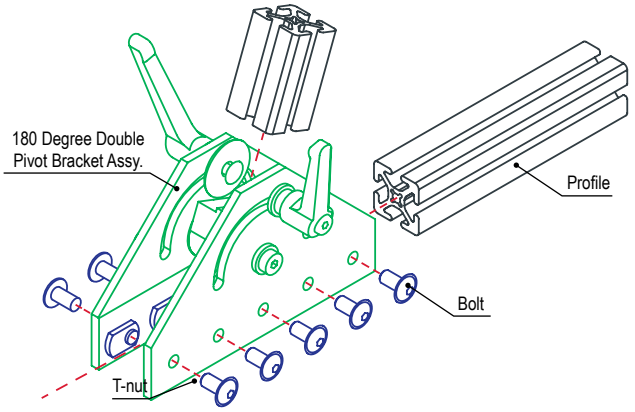

80/20 BUILD YOUR IDEA
More on 80/20® products available at 8020.net

180 Degree Wide Double Pivot Bracket Assembly with "L" Handles

- Includes lubricated bronze bushings, nylon thrust washers and shoulder bolts

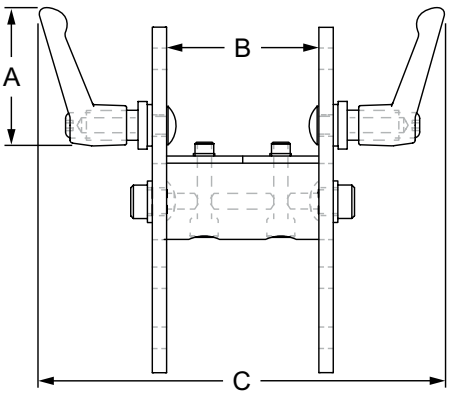

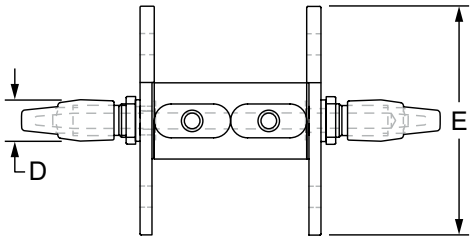

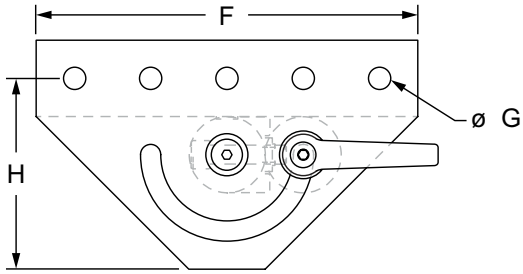

Part No.	Series	Plate (Qty.)	Nub (Qty.)	Handle (Qty.)	Color	A	B	C	D	E	F	G	H	Weight
4055	10	4024 (2)	4186 (1)	2796 (2)	Clear	2.041"	2.000"	5.510"	.541"	3.000"	5.000"	.281"	2.500"	.663 lb
4055-Black	10	4024 (2)	4186 (1)	2796 (2)	Black	2.041"	2.000"	5.510"	.541"	3.000"	5.000"	.281"	2.500"	.663 lb
4455	15	4424 (2)	4386 (1)	2797 (2)	Clear	3.505"	3.000"	8.030"	.871"	4.500"	7.500"	.328"	3.750"	2.396 lb
4455-Black	15	4424 (2)	4386 (1)	2797 (2)	Black	3.505"	3.000"	8.030"	.871"	4.500"	7.500"	.328"	3.750"	2.396 lb
25-4055	25	25-4024 (2)	25-4186 (1)	25-2796 (2)	Clear	51.84mm	50.00mm	138.48mm	13.77mm	75.00mm	125.00mm	6.50mm	62.50mm	.2744 kg
25-4055-Black	25	25-4024 (2)	25-4186 (1)	25-2796 (2)	Black	51.84mm	50.00mm	138.48mm	13.77mm	75.00mm	125.00mm	6.50mm	62.50mm	.2744 kg
40-4455	40	40-4424 (2)	40-4386 (1)	40-2797 (2)	Clear	89.03mm	80.00mm	207.06mm	22.12mm	120.00mm	200.00mm	8.48mm	100.00mm	1.1660 kg
40-4455-Black	40	40-4424 (2)	40-4386 (1)	40-2797 (2)	Black	89.03mm	80.00mm	207.06mm	22.12mm	120.00mm	200.00mm	8.48mm	100.00mm	1.1660 kg

Material Specifications

Material	Alloy*	Finish
Aluminum	6005A – T61	Anodize

* Or comparable

Suggested Hardware (Mount to T-Slot)

Part No.	Series	Qty.	Bolt	T-Nut
3321	10	10	1/4-20 x 1/2" FBHSCS	Economy
3320	15	10	5/16-18 x 5/8" FBHSCS	
75-3404	25	10	M6 x 10mm BHSCS	
75-3422	40	10	M8 x 16mm BHSCS	

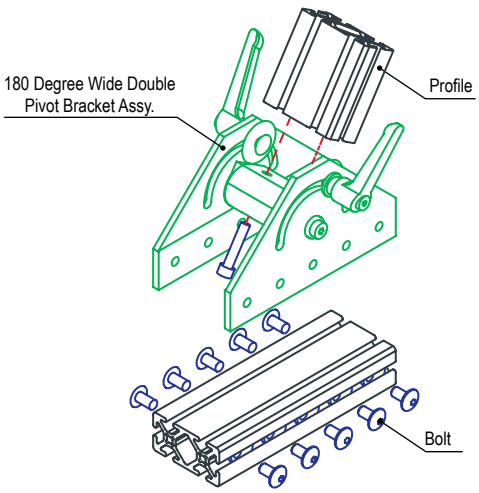

Bearings & Pivots

"L" Handle Kit - Dynamic Pivot

- Adds adjustable stop to dynamic pivot and secures it into semi-permanent position
- Includes mounting hardware

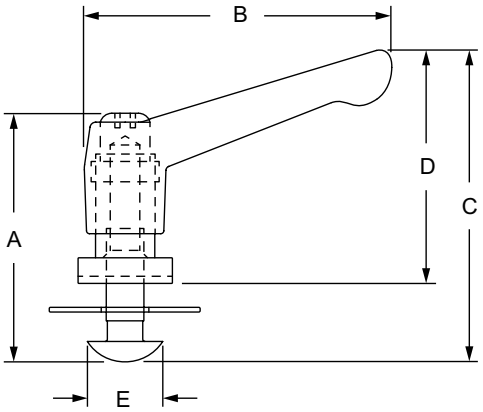

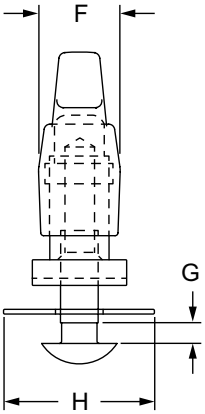

Part No.	Series	Material	Process	Finish	Color	A	B	C	D	E	F	G	H	Weight
2796	10	Nylon 66	Injection Mold	Matte	Black	1.650"	2.041"	2.070"	1.550"	.500"	.540"	.138"	1.000"	.069 lbs
2797	15	Zinc	Die Cast	Gloss	Gray	2.130"	3.505"	2.881"	2.265"	.704"	.871"	.140"	1.495"	.368 lbs
25-2796	25	Nylon 66	Injection Mold	Matte	Black	41.91mm	51.84mm	52.57mm	39.37mm	12.70mm	13.74mm	3.51mm	25.40mm	.0396 kg
40-2797	40	Zinc	Die Cast	Gloss	Gray	54.10mm	89.05mm	73.17mm	57.53mm	17.88mm	22.12mm	3.56mm	37.97mm	.1718 kg

"T" Handle Kit - Dynamic Pivot

- Adds adjustable stop to dynamic pivot and secures it into semi-permanent position
- Includes mounting hardware

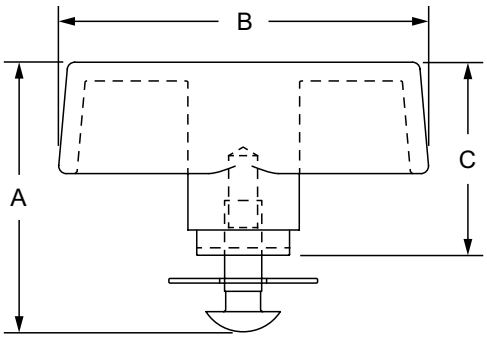

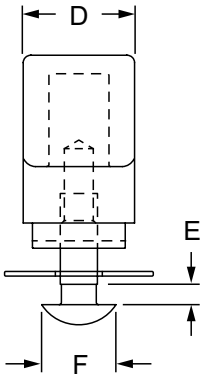

Part No.	Series	Material	Finish	Color	A	B	C	D	E	F	Weight
2798	10	Steel / Polyproylene	Zinc / Matte	Black	1.940"	2.490"	1.425"	.750"	.138"	.500"	.066 lbs
2799	15				1.940"	2.490"	1.350"	.750"	.140"	.704"	.121 lbs
25-2798	25				49.28mm	63.26mm	36.20mm	19.05mm	3.51mm	12.70mm	.0526 kg
40-2799	40				49.94mm	63.26mm	34.29mm	19.05mm	3.56mm	17.88mm	.0567 kg

80/20 BUILD YOUR IDEA
More on 80/20® products available at 8020.net

Single Shaft Stanchion Base

Page 7-2

Double Shaft Stanchion Base

Page 7-3

Single Shaft Blank Stanchion Mounting Plate

Page 7-4

Single Shaft Pre-Drilled Stanchion Mounting Plate

Page 7-5

Double Shaft Blank Stanchion Mounting Plate

Page 7-6

Stanchion Cross Clamp

Page 7-7

Single Shaft Stanchion Mounting Block

Page 7-8

Double Shaft Stanchion Mounting Block

Page 7-10

Narrow Horizontal Stanchion Base

Page 7-11

Wide Horizontal Stanchion Base

Page 7-12

Horizontal Stanchion Quick Clamp

Page 7-13

Quick Stanchion Cross Clamp

Page 7-14

Stanchion Clamp Handle

Page 7-14

Introduction to Stanchions

Stanchions are typically used with 80/20 aluminum tubes to create an additional axis. Stanchions are a more permanent, precise, and stable base than alternatives, such as clamps.

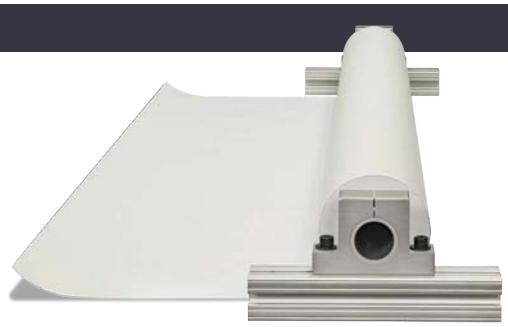

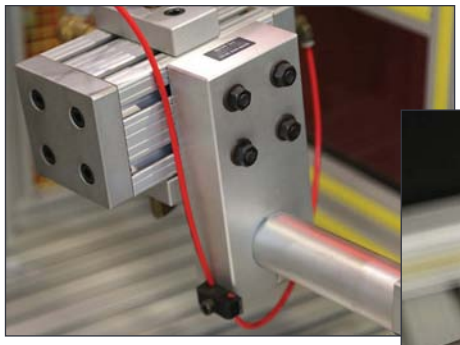

There are different bases to choose from that allow you to add vertical or horizontal axes or a combination of the two. You also have options that support two axes using just one base or even the ability to create an off-set axis.

You will also want to consider adding a handle to your stanchion block; they enable flexibility in positioning and easy repositioning if you will be moving the tube frequently.

Stanchions

Single Shaft Stanchion Base

- Used with aluminum tube profile (pg. 9-5); tube connects perpendicular to mounted base
- Clearance channel for running wires or cables
- Clamp screws included

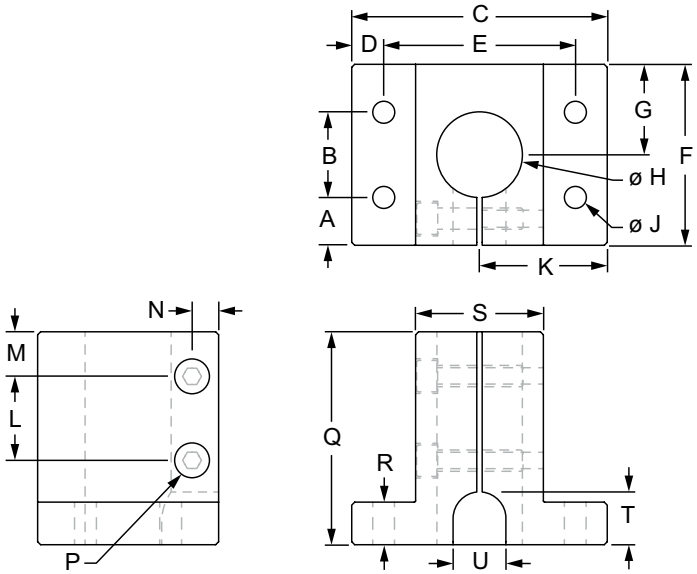

Part No.	Series	Color	Material	Alloy	Finish	Process	A	B	C	D	E	F	G	H
5050	10	Clear	Aluminum	6005A – T61	Anodize	Milled	.563"	1.000"	3.000"	.375"	2.250"	2.125"	1.063"	1.004"
5050-Black	10	Black					.563"	1.000"	3.000"	.375"	2.250"	2.125"	1.063"	1.004"
5100	15	Clear					.312"	1.500"	3.000"	.375"	2.250"	2.125"	1.063"	1.004"
5100-Black	15	Black					.312"	1.500"	3.000"	.375"	2.250"	2.125"	1.063"	1.004"
5200	15	Clear					.500"	1.500"	3.874"	.437"	3.000"	2.500"	1.250"	1.505"
5200-Black	15	Black					.500"	1.500"	3.874"	.437"	3.000"	2.500"	1.250"	1.505"
5300	15	Clear					.875"	1.500"	4.750"	.500"	3.750"	3.250"	1.625"	2.005"
5300-Black	15	Black					.875"	1.500"	4.750"	.500"	3.750"	3.250"	1.625"	2.005"

		J	K	L	M	N	P	Q	R	S	T	U	Weight
5050	10	.257"	1.500"	.990"	.520"	.312"	1/4-20 SHCS	2.500"	.500"	1.500"	.620"	.620"	.714 lb
5050-Black	10	.257"	1.500"	.990"	.520"	.312"	1/4-20 SHCS	2.500"	.500"	1.500"	.620"	.620"	.714 lb
5100	15	.328"	1.500"	.990"	.520"	.312"	1/4-20 SHCS	2.500"	.500"	1.500"	.620"	.620"	.705 lb
5100-Black	15	.328"	1.500"	.990"	.520"	.312"	1/4-20 SHCS	2.500"	.500"	1.500"	.620"	.620"	.705 lb
5200	15	.328"	1.937"	1.110"	.580"	.302"	1/4-20 SHCS	3.000"	.750"	2.250"	.875"	.880"	1.369 lb
5200-Black	15	.328"	1.937"	1.110"	.580"	.302"	1/4-20 SHCS	3.000"	.750"	2.250"	.875"	.880"	1.369 lb
5300	15	.328"	2.375"	1.220"	.630"	.328"	1/4-20 SHCS	3.250"	.750"	2.750"	.750"	1.250"	2.251 lb
5300-Black	15	.328"	2.375"	1.220"	.630"	.328"	1/4-20 SHCS	3.250"	.750"	2.750"	.750"	1.250"	2.251 lb

Suggested Hardware (Mount Stanchion to T-Slot)

Part No.	Bolt Assy.	Qty.	Bolt	T-Nut	Washer
5050	3471	4	1/4-20 x 7/8" SHCS	Economy	Yes
5100	3470	4	5/16-18 x 1" SHCS		
5200	3421	4	5/16-18 x 1.25" SHCS		
5300	3421	4	5/16-18 x 1.25" SHCS		

80/20 BUILD YOUR IDEA
More on 80/20® products available at 8020.net

Double Shaft Stanchion Base

- Used with aluminum tube profile (pg. 9-5); tube connects perpendicular to mounted base
- Clearance channel for running wires or cables
- Clamp screws included

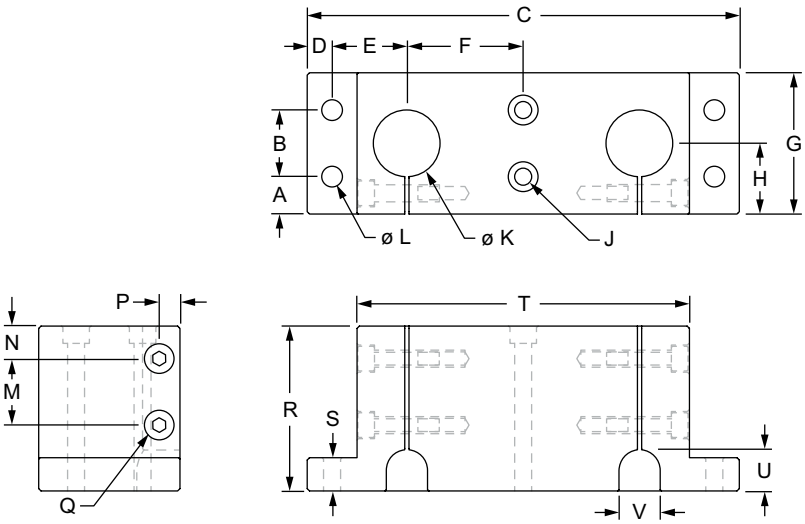

Part No.	Series	Color	Material	Alloy	Finish	Process	A	B	C	D	E	F	G	H
5125	10	Clear	Aluminum	6005A – T61	Anodize	Milled	.563"	1.000"	6.500"	.375"	1.125"	1.750"	2.125"	1.063"
5125-Black	10	Black					.563"	1.000"	6.500"	.375"	1.125"	1.750"	2.125"	1.063"
5150	15	Clear					.312"	1.500"	6.500"	.375"	1.125"	1.750"	2.125"	1.063"
5150-Black	15	Black					.312"	1.500"	6.500"	.375"	1.125"	1.750"	2.125"	1.063"
5250	15	Clear					.500"	1.500"	7.750"	.437"	1.500"	1.938"	2.500"	1.250"
5250-Black	15	Black					.500"	1.500"	7.750"	.437"	1.500"	1.938"	2.500"	1.250"
5350	15	Clear					.875"	1.500"	9.500"	.500"	1.875"	2.375"	3.250"	1.625"
5350-Black	15	Black					.875"	1.500"	9.500"	.500"	1.875"	2.375"	3.250"	1.625"

Part No.	Series	J	K	L	M	N	P	Q	R	S	T	U	V	Weight
5125	10	1/4-20 SHCS	1.004"	.257"	1.000"	.490"	.312"	1/4-20 SHCS	2.480"	.500"	5.000"	.620"	.620"	1.878 lb
5125-Black	10	1/4-20 SHCS	1.004"	.257"	1.000"	.490"	.312"	1/4-20 SHCS	2.480"	.500"	5.000"	.620"	.620"	1.878 lb
5150	15	5/16-18 SHCS	1.004"	.328"	1.000"	.490"	.312"	1/4-20 SHCS	2.480"	.500"	5.000"	.620"	.620"	1.874 lb
5150-Black	15	5/16-18 SHCS	1.004"	.328"	1.000"	.490"	.312"	1/4-20 SHCS	2.480"	.500"	5.000"	.620"	.620"	1.874 lb
5250	15	5/16-18 SHCS	1.505"	.328"	1.110"	.560"	.302"	5/16-18 SHCS	2.980"	.750"	6.125"	.820"	.880"	3.650 lb
5250-Black	15	5/16-18 SHCS	1.505"	.328"	1.110"	.560"	.302"	5/16-18 SHCS	2.980"	.750"	6.125"	.820"	.880"	3.650 lb
5350	15	5/16-18 SHCS	2.005"	.328"	1.250"	.630"	.328"	5/16-18 SHCS	3.250"	.750"	7.500"	.750"	1.250"	6.090 lb
5350-Black	15	5/16-18 SHCS	2.005"	.328"	1.250"	.630"	.328"	5/16-18 SHCS	3.250"	.750"	7.500"	.750"	1.250"	6.090 lb

Suggested Hardware (Mount Stanchion to T-Slot)

Part No.	Bolt Assy.	Qty.	Bolt	T-Nut	Washer		Bolt Assy.	Qty.	Bolt	T-Nut	Washer
5125	3471	4	1/4-20 x 7/8" SHCS	Economy	Yes	AND / OR	3434	2	1/4-20 x 2.5" SHCS	Economy	No
5150	3470	4	5/16-18 x 1" SHCS				3429	2	5/16-18 x 2.5" SHCS		
5250	3421	4	5/16-18 x 1.25" SHCS				3430	2	5/16-18 x 3" SHCS		
5350	3421	4	5/16-18 x 1.25" SHCS				3431	2	5/16-18 x 3.25" SHCS		

Stanchions

Single Shaft Blank Stanchion Mounting Plate

- Used with aluminum tube profile (pg. 9-5) to create custom offset axis; tube connects perpendicular to mounted base
- Clamp screws included

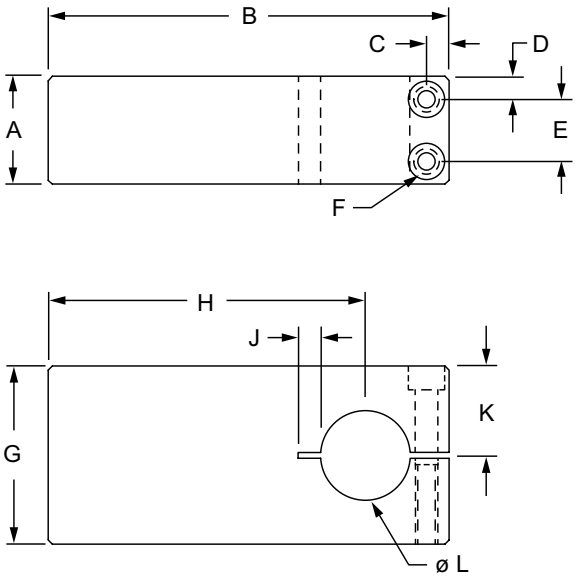

Part No.	Series	Color	Material	Alloy	Finish	Process	A	B	C	D
5400	10	Clear	Aluminum	6005A – T61	Anodize	Milled	1.200"	4.500"	.250"	.250"
5400-Black	10	Black					1.200"	4.500"	.250"	.250"
5450	15	Clear					1.450"	6.500"	.325"	.350"
5450-Black	15	Black					1.450"	6.500"	.325"	.350"

	Series	E	F	G	H	J	K	L	Weight
5400	10	.700"	1/4-20 SHCS	2.000"	3.560"	.250"	1.000"	1.004"	.964 lb
5400-Black	10	.700"	1/4-20 SHCS	2.000"	3.560"	.250"	1.000"	1.004"	.964 lb
5450	15	.750"	1/4-20 SHCS	3.000"	5.125"	—	1.500"	1.505"	2.501 lb
5450-Black	15	.750"	1/4-20 SHCS	3.000"	5.125"	—	1.500"	1.505"	2.501 lb

80/20 BUILD YOUR IDEA
More on 80/20® products available at 8020.net

Single Shaft Pre-Drilled Stanchion Mounting Plate

- Used with aluminum tube profile (pg. 9-5) to create custom offset axis; tube connects perpendicular to mounted base
- Clamp screws included

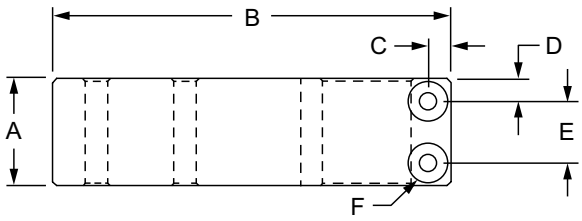

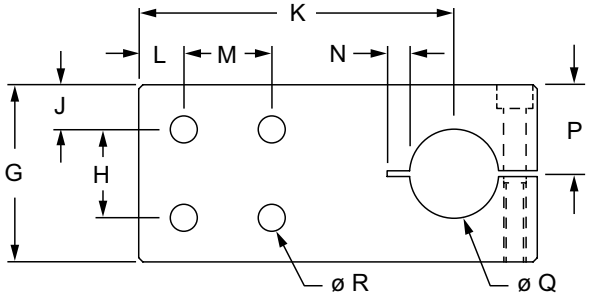

5415,
5425,
5475

5525

Part No.	Series	Color	Material	Alloy	Finish	Process	A	B	C	D	E	F
5415	10	Clear	Aluminum	6005A – T61	Anodize	Milled	1.200”	4.500”	.250”	.250”	.700”	1/4-20 SHCS
5415-Black	10	Black					1.200”	4.500”	.250”	.250”	.700”	1/4-20 SHCS
5425	15	Clear					1.200”	4.500”	.250”	.250”	.700”	1/4-20 SHCS
5425-Black	15	Black					1.200”	4.500”	.250”	.250”	.700”	1/4-20 SHCS
5475	15	Clear					1.450”	6.500”	.328”	.350”	.750”	1/4-20 SHCS
5475-Black	15	Black					1.450”	6.500”	.328”	.350”	.750”	1/4-20 SHCS
5525	15	Clear					1.950”	7.750”	.375”	.350”	1.250”	5/16-18 SHCS
5525-Black	15	Black					1.950”	7.750”	.375”	.350”	1.250”	5/16-18 SHCS

Part No.	Series	G	H	J	K	L	M	N	P	Q	R	Weight
5415	10	2.000”	1.000”	.500”	3.560”	.500”	1.000”	.250”	1.000”	1.004”	.257”	.946 lb
5415-Black	10	2.000”	1.000”	.500”	3.560”	.500”	1.000”	.250”	1.000”	1.004”	.257”	.946 lb
5425	15	2.000”	1.500”	.250”	3.560”	.500”	1.500”	.250”	1.000”	1.004”	.328”	.936 lb
5425-Black	15	2.000”	1.500”	.250”	3.560”	.500”	1.500”	.250”	1.000”	1.004”	.328”	.936 lb
5475	15	3.000”	1.500”	.750”	5.125”	.750”	1.500”	—	1.500”	1.505”	.328”	2.494 lb
5475-Black	15	3.000”	1.500”	.750”	5.125”	.750”	1.500”	—	1.500”	1.505”	.328”	2.494 lb
5525	15	4.000”	1.500”	1.250”	6.120”	.750”	1.500”	—	2.000”	2.005”	.328”	5.220 lb
5525-Black	15	4.000”	1.500”	1.250”	6.120”	.750”	1.500”	—	2.000”	2.005”	.328”	5.220 lb

Suggested Hardware (Mount Stanchion to T-Slot)

Part No.	Bolt Assy.	Qty.	Bolt	T-Nut	Washer
5415	3432	4	1/4-20 x 1.5” SHCS	Economy	Yes
5425	3423	4	5/16-18 x 1.75” SHCS		
5475	3424	4	5/16-18 x 2” SHCS		
5525	3428	6	5/16-18 x 2.5” SHCS		

Stanchions

Double Shaft Blank Stanchion Mounting Plate

- Used with aluminum tube profile (pg. 9-5) to create custom double offset axis; tube connects perpendicular to mounted base
- Clamp screws included

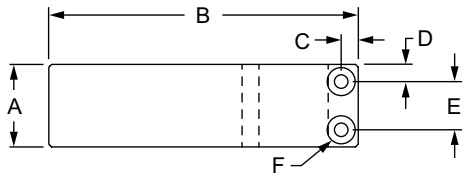

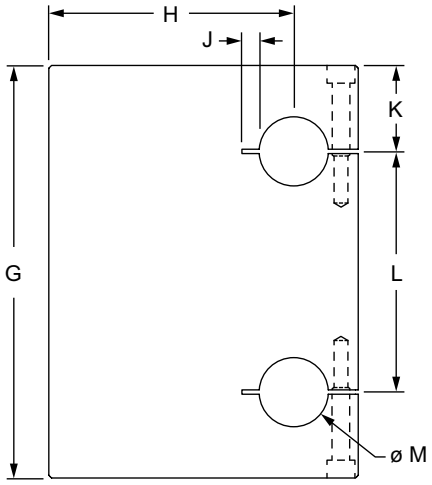

Part No.	Series	Color	Material	Alloy	Finish	Process	A	B	C	D
5700	15	Clear	Aluminum	6005A – T61	Anodize	Milled	1.200”	4.500”	.250”	.250”
5700-Black	15	Black					1.200”	4.500”	.250”	.250”
5750	15	Clear					1.450”	5.500”	.328”	.350”
5750-Black	15	Black					1.450”	5.500”	.328”	.350”

		E	F	G	H	J	K	L	M	Weight
5700	15	.700”	1/4-20 SHCS	6.000”	3.560”	.250”	1.250”	3.500”	1.004”	3.034 lb
5700-Black	15	.700”	1/4-20 SHCS	6.000”	3.560”	.250”	1.250”	3.500”	1.004”	3.034 lb
5750	15	.750”	1/4-20 SHCS	6.000”	4.125”	—	1.062”	3.875”	1.505”	4.180 lb
5750-Black	15	.750”	1/4-20 SHCS	6.000”	4.125”	—	1.062”	3.875”	1.505”	4.180 lb

80/20 BUILD YOUR IDEA
More on 80/20® products available at 8020.net

Stanchion Cross Clamp

- Used with aluminum tube profile (pg. 9-5) to create two axes perpendicular to each other
- Clamp screws included

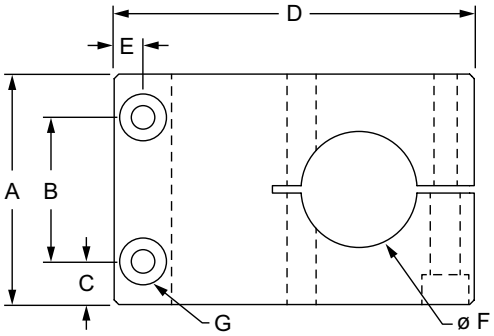

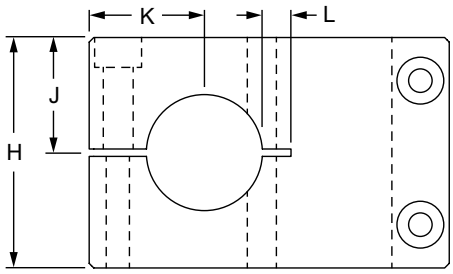

Part No.	Series	Color	Material	Alloy	Finish	Process	A	B	C	D
5575	15	Clear	Aluminum	6005A – T61	Anodize	Milled	2.000”	1.250”	.375”	3.125”
5575-Black	15	Black					2.000”	1.250”	.375”	3.125”
5625	15	Clear					2.500”	1.750”	.375”	4.125”
5625-Black	15	Black					2.500”	1.750”	.375”	4.125”
5675	15	Clear					3.250”	2.500”	.375”	5.500”
5675-Black	15	Black					3.250”	2.500”	.375”	5.500”

		E	F	G	H	J	K	L	Weight
5575	15	.250”	1.004”	1/4-20 SHCS	2.000”	1.000”	1.000”	.250”	.937 lb
5575-Black	15	.250”	1.004”	1/4-20 SHCS	2.000”	1.000”	1.000”	.250”	.937 lb
5625	15	.328”	1.505”	1/4-20 SHCS	2.500”	1.250”	1.250”	—	1.669 lb
5625-Black	15	.328”	1.505”	1/4-20 SHCS	2.500”	1.250”	1.250”	—	1.669 lb
5675	15	.312”	2.005”	5/16-18 SHCS	3.250”	1.625”	1.625”	—	3.689 lb
5675-Black	15	.312”	2.005”	5/16-18 SHCS	3.250”	1.625”	1.625”	—	3.689 lb

Stanchions

Single Shaft Stanchion Mounting Block

- Used with aluminum tube profile (pg. 9-5) for connecting additional profiles or accessories; pre-drilled holes to accommodate positioning
- Clamp screws included

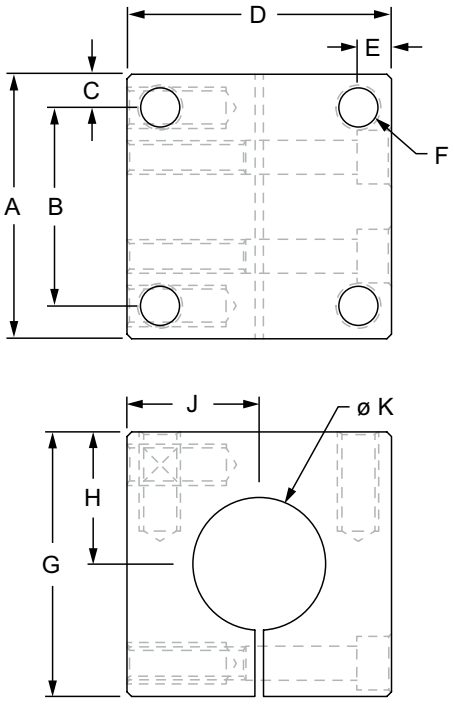

Part No.	Series	Color	Material	Alloy	Finish	Process	A	B	C	D	E
5550	15	Clear	Aluminum	6005A – T61	Anodize	Milled	2.000"	1.500"	.250"	2.000"	.250"
5550-Black	15	Black					2.000"	1.500"	.250"	2.000"	.250"
5600	15	Clear					2.500"	1.500"	.500"	2.500"	.500"
5600-Black	15	Black					2.500"	1.500"	.500"	2.500"	.500"

Part No.	Series	F	G	H	J	K	L	M	N	P	Weight
5550	15	5/16-18	2.000"	1.000"	1.000"	1.004"	.250"	.625"	.750"	1/4-20 SHCS	.592 lb
5550-Black	15	5/16-18	2.000"	1.000"	1.000"	1.004"	.250"	.625"	.750"	1/4-20 SHCS	.592 lb
5600	15	5/16-18	2.500"	1.250"	1.250"	1.505"	.328"	.810"	.880"	1/4-20 SHCS	1.060 lb
5600-Black	15	5/16-18	2.500"	1.250"	1.250"	1.505"	.328"	.810"	.880"	1/4-20 SHCS	1.060 lb

80/20 BUILD YOUR IDEA
More on 80/20® products available at 8020.net

Single Shaft Stanchion Mounting Block (Continued)

- Used with aluminum tube profile (pg. 9-5) for connecting additional profiles or accessories; pre-drilled holes to accommodate positioning
- Clamp screws included

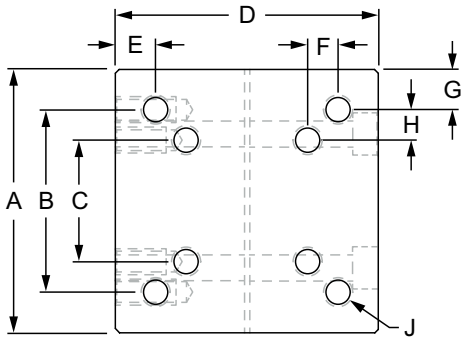

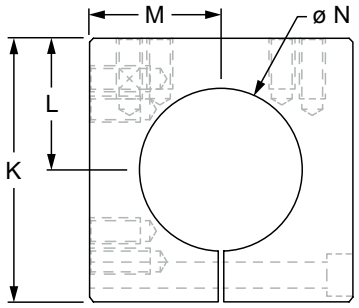

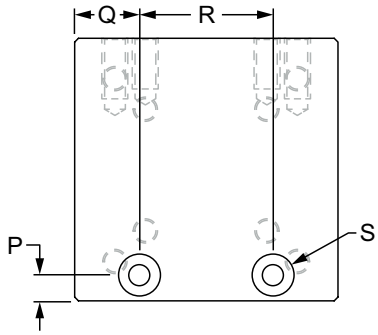

Part No.	Series	Color	Material	Alloy	Finish	Process	A	B	C	D	E	F	G
5650	15	Clear	Aluminum	6005A – T61	Anodize	Milled	3.250”	2.250”	1.500”	3.250”	.500”	.375”	.500”
5650-Black	15	Black					3.250”	2.250”	1.500”	3.250”	.500”	.375”	.500”

		H	J	K	L	M	N	P	Q	R	S	Weight
5650	15	.375”	5/16-18	3.250”	1.625”	1.625”	2.005”	.328”	.800”	1.650”	5/16-18 SHCS	2.300 lb
5650-Black	15	.375”	5/16-18	3.250”	1.625”	1.625”	2.005”	.328”	.800”	1.650”	5/16-18 SHCS	2.300 lb

Stanchions

Double Shaft Stanchion Mounting Block

- Used with aluminum tube profile (pg. 9-5) to create two additional axes; tube connects parallel to mounted base
- Clamp screws included

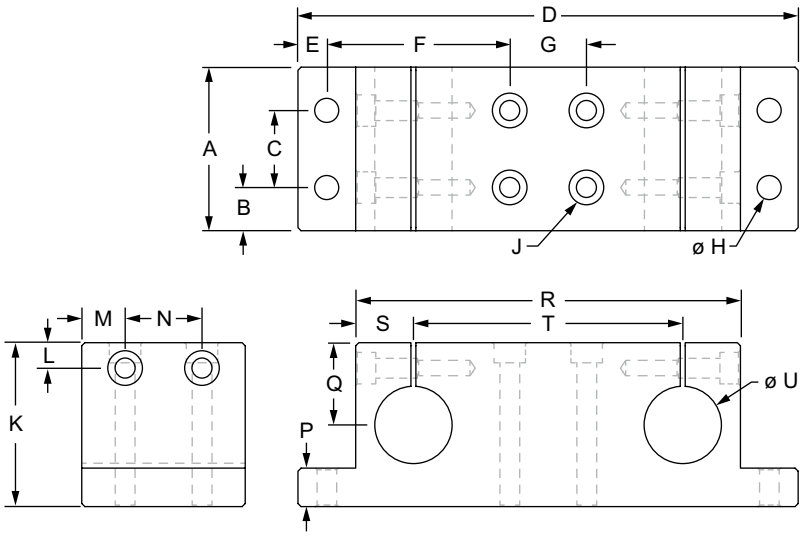

Part No.	Series	Color	Material	Alloy	Finish	Process	A	B	C	D	E	F	G	H
5845	10	Clear	Aluminum	6005A – T61	Anodize	Milled	2.125"	.563"	1.000"	6.500"	.375"	2.375"	1.000"	.257"
5845-Black	10	Black					2.125"	.563"	1.000"	6.500"	.375"	2.375"	1.000"	.257"
5850	15	Clear					2.125"	.312"	1.500"	6.500"	.375"	2.125"	1.500"	.328"
5850-Black	15	Black					2.125"	.312"	1.500"	6.500"	.375"	2.125"	1.500"	.328"
5900	15	Clear					2.500"	.500"	1.500"	7.750"	.375"	2.750"	1.500"	.328"
5900-Black	15	Black					2.500"	.500"	1.500"	7.750"	.375"	2.750"	1.500"	.328"
5950	15	Clear					3.250"	.875"	1.500"	9.500"	.500"	3.500"	1.500"	.328"
5950-Black	15	Black					3.250"	.875"	1.500"	9.500"	.500"	3.500"	1.500"	.328"

Part No.	Series	J	K	L	M	N	P	Q	R	S	T	U	Weight
5845	10	1/4-20 SHCS	2.130"	.330"	.563"	1.000"	.500"	1.068"	5.000"	.750"	3.500"	1.004"	1.861 lb
5845-Black	10	1/4-20 SHCS	2.130"	.330"	.563"	1.000"	.500"	1.068"	5.000"	.750"	3.500"	1.004"	1.861 lb
5850	15	5/16-18 SHCS	2.130"	.330"	.560"	1.000"	.500"	1.068"	5.000"	.750"	3.500"	1.004"	1.857 lb
5850-Black	15	5/16-18 SHCS	2.130"	.330"	.560"	1.000"	.500"	1.068"	5.000"	.750"	3.500"	1.004"	1.857 lb
5900	15	5/16-18 SHCS	2.500"	.325"	.500"	1.500"	.750"	1.125"	6.130"	1.128"	3.875"	1.505"	3.857 lb
5900-Black	15	5/16-18 SHCS	2.500"	.325"	.500"	1.500"	.750"	1.125"	6.130"	1.128"	3.875"	1.505"	3.061 lb
5950	15	5/16-18 SHCS	3.250"	.320"	.875"	1.500"	1.000"	1.625"	7.500"	1.375"	4.750"	2.005"	6.061 lb
5950-Black	15	5/16-18 SHCS	3.250"	.320"	.875"	1.500"	1.000"	1.625"	7.500"	1.375"	4.750"	2.005"	6.220 lb

Suggested Hardware (Mount Stanchion to T-Slot)

Part No.	Bolt Assy.	Qty.	Bolt	T-Nut	Washer		Bolt Assy.	Qty.	Bolt	T-Nut	Washer
5845	3471	4	1/4-20 x 7/8" SHCS	Economy	Yes	AND / OR	3433	4	1/4-20 x 2.125" SHCS	Economy	No
5850	3470	4	5/16-18 x 1" SHCS				3427	4	5/16-18 x 2.25" SHCS		
5900	3421	4	5/16-18 x 1.25" SHCS				3429	4	5/16-18 x 2.5" SHCS		
5950	3422	4	5/16-18 x 1.5" SHCS				3431	4	5/16-18 x 3.25" SHCS		

80/20 BUILD YOUR IDEA
More on 80/20® products available at 8020.net

Narrow Horizontal Stanchion Base

- Used with aluminum tube profile (pg. 9-5) to create an additional axis; tube connects parallel to mounted base
- Clamp screws included

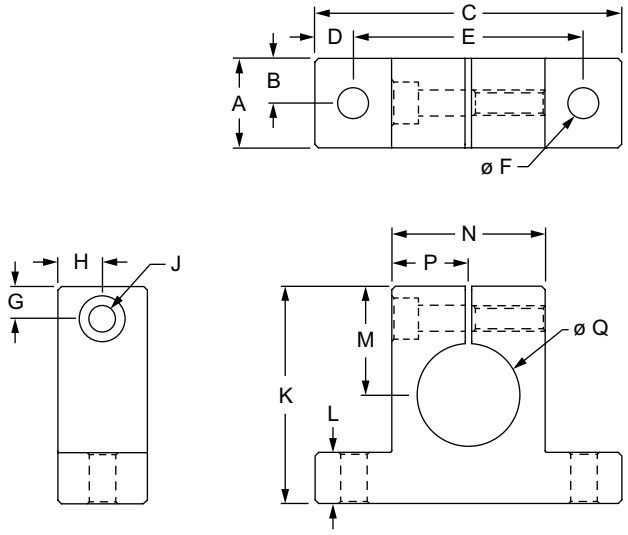

Part No.	Series	Color	Material	Alloy	Finish	Process	A	B	C	D	E	F
5860	10	Clear	Aluminum	6005A – T61	Anodize	Milled	.875”	.438”	3.000”	.375”	2.250”	.257”
5860-Black	10	Black					.875”	.438”	3.000”	.375”	2.250”	.257”
5870	15	Clear					.875”	.438”	3.000”	.375”	2.250”	.328”
5870-Black	15	Black					.875”	.438”	3.000”	.375”	2.250”	.328”
5880	15	Clear					1.125”	.560”	3.875”	.437”	3.000”	.328”
5880-Black	15	Black					1.125”	.560”	3.875”	.437”	3.000”	.328”
5890	15	Clear					1.437”	.718”	4.750”	.500”	3.750”	.328”
5890-Black	15	Black					1.437”	.718”	4.750”	.500”	3.750”	.328”

Part No.	Series	G	H	J	K	L	M	N	P	Q	Weight
5860	10	.313”	.438”	1/4-20 SHCS	2.125”	.500”	1.062”	1.500”	.750”	1.004”	.264 lb
5860-Black	10	.313”	.438”	1/4-20 SHCS	2.125”	.500”	1.062”	1.500”	.750”	1.004”	.264 lb
5870	15	.313”	.438”	1/4-20 SHCS	2.125”	.500”	1.062”	1.500”	.750”	1.004”	.262 lb
5870-Black	15	.313”	.438”	1/4-20 SHCS	2.125”	.500”	1.062”	1.500”	.750”	1.004”	.262 lb
5880	15	.313”	.560”	1/4-20 SHCS	2.500”	.750”	1.375”	2.253”	1.127”	1.505”	.547 lb
5880-Black	15	.313”	.560”	1/4-20 SHCS	2.500”	.750”	1.375”	2.253”	1.127”	1.505”	.547 lb
5890	15	.313”	.718”	5/16-18 SHCS	3.250”	1.000”	1.625”	2.750”	1.375”	2.005”	1.080 lb
5890-Black	15	.313”	.718”	5/16-18 SHCS	3.250”	1.000”	1.625”	2.750”	1.375”	2.005”	1.080 lb

Suggested Hardware (Mount Stanchion to T-Slot)

Part No.	Bolt Assy.	Qty.	Bolt	T-Nut	Washer
5860	3471	2	1/4-20 x 7/8” SHCS	Economy	Yes
5870	3470	2	5/16-18 x 1” SHCS		
5880	3421	2	5/16-18 x 1.25” SHCS		
5890	3422	2	5/16-18 x 1.5” SHCS		

Stanchions

Wide Horizontal Stanchion Base

- Used with aluminum tube profile (pg. 9-5) to create an additional axis; tube connects parallel to mounted base
- Clamp screws included

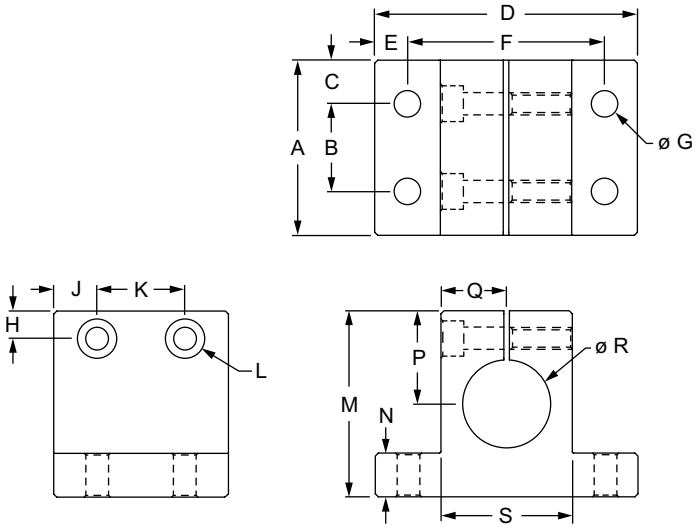

Part No.	Series	Color	Material	Alloy	Finish	Process	A	B	C	D	E	F	G
5910	10	Clear	Aluminum	6005A – T61	Anodize	Milled	2.000”	1.000”	.500”	3.000”	.375”	2.250”	.257”
5910-Black	10	Black					2.000”	1.000”	.500”	3.000”	.375”	2.250”	.257”
5920	15	Clear					2.000”	1.500”	.250”	3.000”	.375”	2.250”	.328”
5920-Black	15	Black					2.000”	1.500”	.250”	3.000”	.375”	2.250”	.328”
5930	15	Clear					2.500”	1.500”	.500”	3.875”	.438”	3.000”	.328”
5930-Black	15	Black					2.500”	1.500”	.500”	3.875”	.438”	3.000”	.328”
5940	15	Clear					3.250”	1.500”	.875”	4.750”	.500”	3.750”	.328”
5940-Black	15	Black					3.250”	1.500”	.875”	4.750”	.500”	3.750”	.328”

Part No.	Series	H	J	K	L	M	N	P	Q	R	S	Weight
5910	10	.313”	.500”	1.000”	1/4-20 SHCS	2.125”	.500”	1.063”	.750”	1.004”	1.500”	.604 lb
5910-Black	10	.313”	.500”	1.000”	1/4-20 SHCS	2.125”	.500”	1.063”	.750”	1.004”	1.500”	.604 lb
5920	15	.313”	.500”	1.000”	1/4-20 SHCS	2.125”	.500”	1.063”	.750”	1.004”	1.500”	.596 lb
5920-Black	15	.313”	.500”	1.000”	1/4-20 SHCS	2.125”	.500”	1.063”	.750”	1.004”	1.500”	.596 lb
5930	15	.313”	.500”	1.500”	1/4-20 SHCS	2.500”	.750”	1.375”	1.128”	1.505”	2.255”	1.222 lb
5930-Black	15	.313”	.500”	1.500”	1/4-20 SHCS	2.500”	.750”	1.375”	1.128”	1.505”	2.255”	1.222 lb
5940	15	.313”	.875”	1.500”	5/16-18 SHCS	3.250”	1.000”	1.625”	1.375”	2.005”	2.750”	2.470 lb
5940-Black	15	.313”	.875”	1.500”	5/16-18 SHCS	3.250”	1.000”	1.625”	1.375”	2.005”	2.750”	2.470 lb

Suggested Hardware (Mount Stanchion to T-Slot)

Part No.	Bolt Assy.	Qty.	Bolt	T-Nut	Washer
5910	3471	4	1/4-20 x 7/8” SHCS	Economy	Yes
5920	3470	4	5/16-18 x 1” SHCS		
5930	3421	4	5/16-18 x 1.25” SHCS		
5940	3422	4	5/16-18 x 1.5” SHCS		

80/20 BUILD YOUR IDEA
More on 80/20® products available at 8020.net

Horizontal Stanchion Quick Clamp

- Used with aluminum tube profile (pg. 9-5) to create an additional axis; tube connects parallel to mounted base
- Includes black nylon ratcheting handle (pg. 7-14)

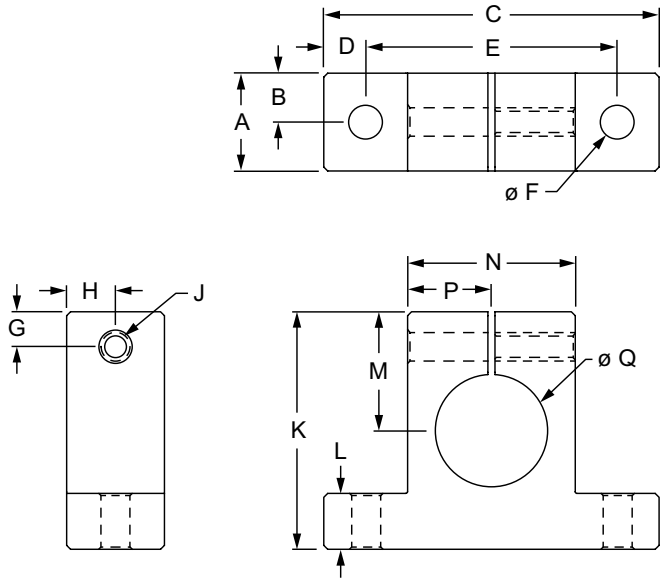

Part No.	Series	Color	Material	Alloy	Finish	Process	A	B	C	D	E	F
5360	10	Clear	Aluminum	6005A – T61	Anodize	Milled	.875”	.438”	3.000”	.375”	2.250”	.257”
5360-Black	10	Black					.875”	.438”	3.000”	.375”	2.250”	.257”
5370	15	Clear					.875”	.438”	3.000”	.375”	2.250”	.328”
5370-Black	15	Black					.875”	.438”	3.000”	.375”	2.250”	.328”

		G	H	J	K	L	M	N	P	Q	Weight
5360	10	.313”	.438”	1/4-20	2.125”	.500”	1.062”	1.500”	.750”	1.004”	.304 lb
5360-Black	10	.313”	.438”	1/4-20	2.125”	.500”	1.062”	1.500”	.750”	1.004”	.304 lb
5370	15	.313”	.438”	1/4-20	2.125”	.500”	1.062”	1.500”	.750”	1.004”	.299 lb
5370-Black	15	.313”	.438”	1/4-20	2.125”	.500”	1.062”	1.500”	.750”	1.004”	.299 lb

Suggested Hardware (Mount Stanchion to T-Slot)

Part No.	Bolt Assy.	Qty.	Bolt	T-Nut	Washer
5360	3471	2	1/4-20 x 7/8” SHCS	Economy	Yes
5370	3470	2	5/16-18 x 1” SHCS		

Stanchions

Quick Stanchion Cross Clamp

- Used with aluminum tube profile (pg. 9-5) to create two axes additional axis
- Includes two black nylon ratcheting handle (pg. 7-14)

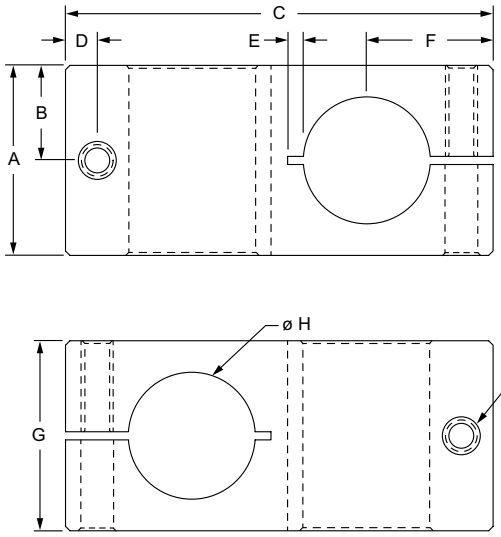

Part No.	Series	Material	Alloy	Process	Color	A	B	C	D	E	F	G	H	J	Weight
5340	F	Aluminum	6005A – T61	Milled	Clear Anodize	1.500"	.750"	3.375"	.250"	.125"	1.000"	1.500"	1.004"	1/4-20	.577 lb
5340-Black					Black Anodize	1.500"	.750"	3.375"	.250"	.125"	1.000"	1.500"	1.004"	1/4-20	.577 lb

Stanchion Clamp Handle

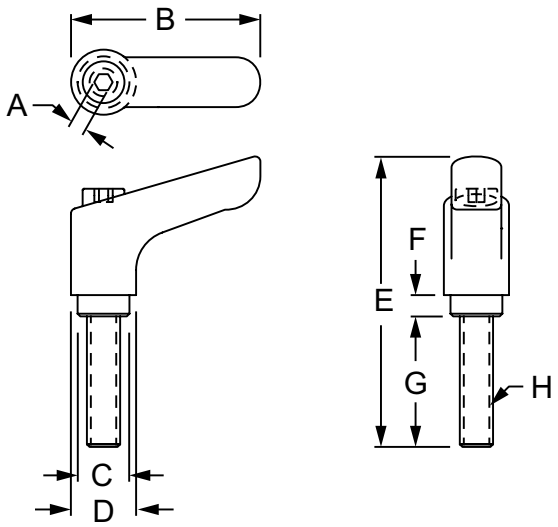

Part No.	Series	Material	Grade	Color	A	B	C	D	E	F	G	H	Weight
6847	F	Plastic	Nylon	Black	.120"	2.056"	.390"	.490"	2.463"	.160"	1.260"	1/4-20	.047 lb

80/20 BUILD YOUR IDEA
More on 80/20® products available at 8020.net

Accessories

Finishing Touches

Page 8-3

Protection Options

Page 8-3

Wire & Cable Management
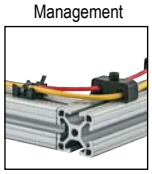
Page 8-4

Storage & Organization

Page 8-4

45 Degree Supports

Page 8-5

45 Degree Support Connector

Page 8-10

End Cap with Push-In Fastener

Page 8-11

Push-In Fastener

Page 8-11

Self Tapping End Cap Screw
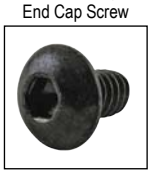
Page 8-12

End Cap with Molded Push-In Stem

Page 8-13

Screw-On End Cap

Page 8-14

3 Way - Corner Bracket Cover Cap

Page 8-15

Ready Tube® End Cap

Page 8-16

Quick Frame® End Cap

Page 8-16

Aluminum T-Slot Cover

Page 8-17

Standard T-Slot Cover

Page 8-18

Economy T-Slot Cover

Page 8-19

Reduction T-Slot Cover

Page 8-20

Rubber T-Slot Cover

Page 8-21

Tread Strip

Page 8-22

Wire Housing

Page 8-23

Wire Housing Cover

Page 8-23

Wiring Duct

Page 8-24

Cable Tie
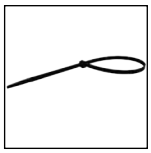
Page 8-25

Cable Tie Mounting Pad

Page 8-25

Drop-In Cable & Tube Clip

Page 8-26

Cable & Tube Clip

Page 8-26

Cable Tie Mounting Block

Page 8-27

Single Cable & Tube Clamp

Page 8-28

Double Cable & Tube Clamp

Page 8-29

Power Strip
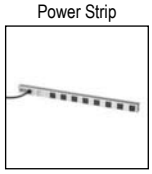
Page 8-30

Anodize Breaker

Page 8-31

Grounding Terminal

Page 8-31

Storage Bin

Page 8-32

Storage Bin Hanger

Page 8-32

Heavy-Duty Monitor Mount

Page 8-33

Adjustable Monitor Mount

Page 8-34

Workstation Arm

Page 8-35

Hand Crank Lift System

Page 8-36

Electric Lift System

Page 8-38

Slide-In Tool Hanger

Page 8-40

Tool Hanger Spring Hook

Page 8-40

Vertical Mount Hook

Page 8-41

Horizontal Mount Hook

Page 8-42

Magnetic Tool Holder

Page 8-43

Tool Holder Open Bottom

Page 8-44

Cup Holder Closed Bottom

Page 8-44

Light-Duty Adhesive Clamp

Page 8-45

Label Holder

Page 8-45

Rubber Bumper

Page 8-46

Tabletop Mounting Tape

Page 8-46

Accessories

Manifolds

Introduction to Pressure Manifolds
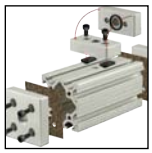
Page 8-47

3-Hole Pressure Manifold Feed Plate

Page 8-48

3-Hole Gasket for Pressure Manifold

Page 8-48

2-Hole Pressure Manifold Stopper Plate

Page 8-49

5-Hole Square Pressure Manifold Feed Plate

Page 8-50

5-Hole Square Gasket for Pressure Manifold

Page 8-50

4-Hole Pressure Manifold Stopper Plate

Page 8-51

5-Hole Rectangular Pressure Manifold Feed Plate

Page 8-52

5-Hole Rectangular Gasket for Pressure Manifold

Page 8-52

3-Hole Pressure Manifold Stopper Plate

Page 8-53

12-Hole Pressure Manifold Feed Plate

Page 8-54

12-Hole Gasket for Pressure Manifold

Page 8-54

8-Hole Pressure Manifold Stopper Plate

Page 8-55

Pressure Manifold Access Plate

Page 8-56

Pressure Manifold Tap Ready Access Plate

Page 8-57

Gravity Rollers

Standard Gravity Roller System
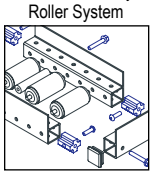
Page 8-58

Gravity Roller

Page 8-59

Gravity Roller Mounting Block

Page 8-60

Connector Rod

Page 8-61

Connector Rod Profile

Page 8-61

P-Tube Stopper

Page 8-62

Finishing Touches

80/20 accessories pull together your project and give it the finishing touches to make it fit your exact specifications. There are a wide variety of options; from storage and organization to wire and tube management, you'll find what you need to enhance and personalize your project.

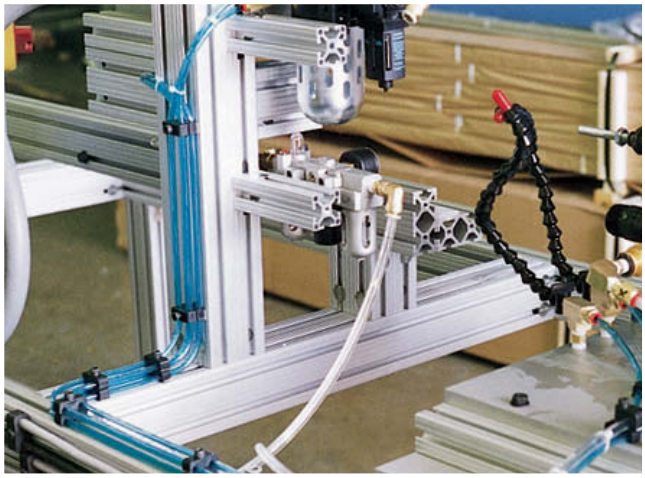

When adding accessories, it's helpful to consider a few overall categories:

- Protection
- Wire & Cable Management
- Storage and Organization

Keep in Mind
Some products can be used in multiple categories. For instance, T-slot covers provide protection from debris buildup and can also be used to manage wires and cables recessed within the T-slot.

Protection

Accessories in this category are used for a range of purposes from protecting people and equipment from sharp edges and damage to keeping dust out of T- slots. Some of the products, such as T-slot covers and end caps, also add a finishing look to your project.

- End caps
- T-slot covers
- Tread strip
- Anodize breaker
- Grounding terminal
- Rubber bumper

Tip: Try aluminum T-slot covers to blend in with your profile or use colors to stand out and denote caution or warning.

Accessories

Wire and Cable Management

Wire and cable management products improve safety by keeping your application clean, protected and organized. These products decrease the possibility of damage to wires, cables and tubes and can be quickly and easily installed into any project. The variety of options provides flexibility in design and implementation.

- Wiring duct
- Wire housing & covers
- Cable tie mounting pad
- Cable and tube clip
- Cable tie mounting block
- Single and double tube clamps

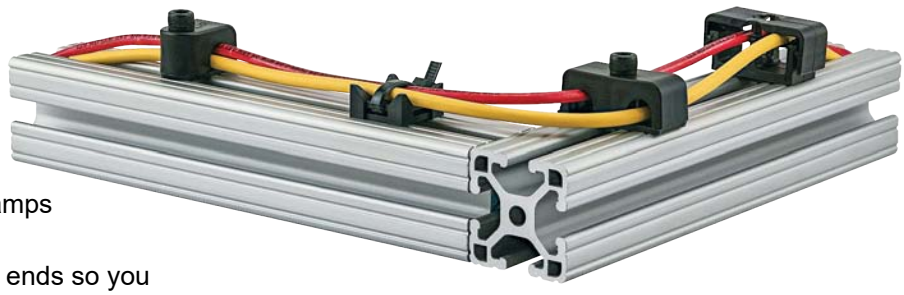

Tip: Wiring duct has interlocking ends so you can make the duct any customized length.

Storage & Organization

Storage and organization accessories come in a range of colors and sizes to accommodate your processes. Keep clutter at bay and streamline operations by incorporating these products into your application.

- Storage bins
- Slide-in tool hanger
- Mounting hooks
- Tool hanger spring hook
- Light-duty adhesive clamp
- Tool & Cup Holders
- Label holder

Important Note: Storage bins are mounted to a T-slot profile using storage bin hangers (see page 8-32).

That's Not All
Be sure to browse through all of the products to find everything you need to finish your project.

80/20 BUILD YOUR IDEA
More on 80/20® products available at 8020.net

45 Degree Supports

- Used to reinforce 90 degree connections; premachined with counterbores and 45 degree miter angle on both ends
- Includes socket head cap screws, washers and T-nuts

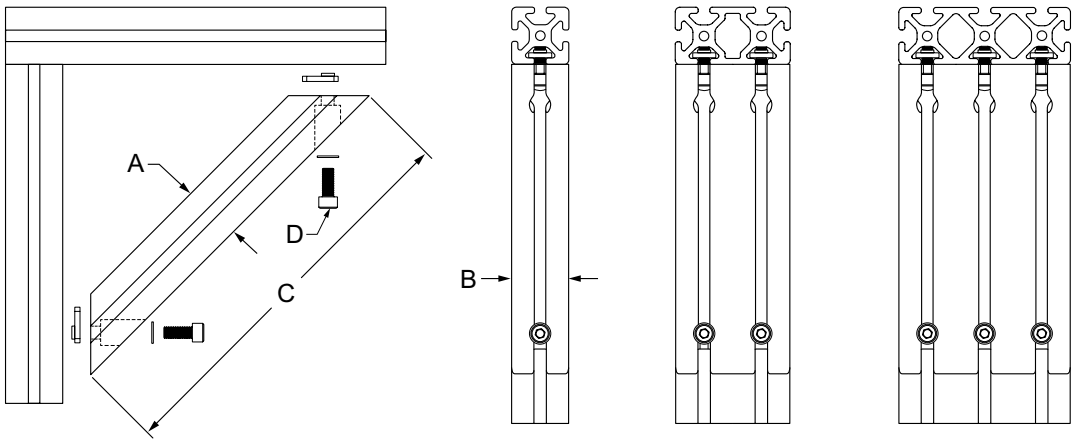

Part No.	Series	Profile	A	B	C	D (Included Hardware)						Weight	Product Representation (Length Will Vary)
						Bolt	Qty.	T-Nut	Qty.	Washer	Qty.		
2565	10	1010	1.000"	1.000"	6.000"	3067	2	3382	2	3258	2	.244 lb	
2565-Black	10	1010-Black	1.000"	1.000"	6.000"	3067	2	3382	2	3258	2	.244 lb	
2570	10	1010	1.000"	1.000"	12.000"	3067	2	3382	2	3258	2	.581 lb	
2570-Black	10	1010-Black	1.000"	1.000"	12.000"	3067	2	3382	2	3258	2	.581 lb	
2575	10	1010	1.000"	1.000"	18.000"	3067	2	3382	2	3258	2	.845 lb	
2575-Black	10	1010-Black	1.000"	1.000"	18.000"	3067	2	3382	2	3258	2	.845 lb	
2583	10	1010	1.000"	1.000"	24.000"	3067	2	3382	2	3258	2	1.056 lb	
2583-Black	10	1010-Black	1.000"	1.000"	24.000"	3067	2	3382	2	3258	2	1.056 lb	
2566	10	1020	1.000"	2.000"	6.000"	3067	4	3382	4	3258	4	.573 lb	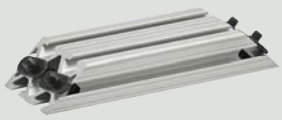
2566-Black	10	1020-Black	1.000"	2.000"	6.000"	3067	4	3382	4	3258	4	.573 lb	
2567	10	1020	1.000"	2.000"	12.000"	3067	4	3382	4	3258	4	1.041 lb	
2567-Black	10	1020-Black	1.000"	2.000"	12.000"	3067	4	3382	4	3258	4	1.041 lb	
2568	10	1020	1.000"	2.000"	18.000"	3067	4	3382	4	3258	4	1.509 lb	
2568-Black	10	1020-Black	1.000"	2.000"	18.000"	3067	4	3382	4	3258	4	1.509 lb	
2584	10	1020	1.000"	2.000"	24.000"	3067	4	3382	4	3258	4	1.872 lb	
2584-Black	10	1020-Black	1.000"	2.000"	24.000"	3067	4	3382	4	3258	4	1.872 lb	
2571	10	1030	1.000"	3.000"	6.000"	3067	6	3382	6	3258	6	.660 lb	
2571-Black	10	1030-Black	1.000"	3.000"	6.000"	3067	6	3382	6	3258	6	.660 lb	
2572	10	1030	1.000"	3.000"	12.000"	3067	6	3382	6	3258	6	1.579 lb	
2572-Black	10	1030-Black	1.000"	3.000"	12.000"	3067	6	3382	6	3258	6	1.579 lb	
2573	10	1030	1.000"	3.000"	18.000"	3067	6	3382	6	3258	6	2.263 lb	
2573-Black	10	1030-Black	1.000"	3.000"	18.000"	3067	6	3382	6	3258	6	2.263 lb	
2574	10	1030	1.000"	3.000"	24.000"	3067	6	3382	6	3258	6	2.669 lb	
2574-Black	10	1030-Black	1.000"	3.000"	24.000"	3067	6	3382	6	3258	6	2.669 lb	
2556	15	1501	1.500"	1.500"	6.000"	3112	2	3278	2	3260	6	.517 lb	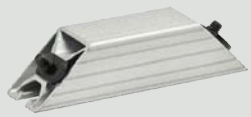
2556-Black	15	1501-Black	1.500"	1.500"	6.000"	3112	2	3278	2	3260	6	.517 lb	
2557	15	1501	1.500"	1.500"	12.000"	3112	2	3278	2	3260	6	1.096 lb	
2557-Black	15	1501-Black	1.500"	1.500"	12.000"	3112	2	3278	2	3260	6	1.096 lb	
2558	15	1501	1.500"	1.500"	18.000"	3112	2	3278	2	3260	6	1.594 lb	
2558-Black	15	1501-Black	1.500"	1.500"	18.000"	3112	2	3278	2	3260	6	1.594 lb	
2559	15	1501	1.500"	1.500"	24.000"	3112	2	3278	2	3260	6	2.092 lb	
2559-Black	15	1501-Black	1.500"	1.500"	24.000"	3112	2	3278	2	3260	6	2.092 lb	

Accessories

45 Degree Supports (Continued)

Part No.	Series	Profile	A	B	C	D (Included Hardware)						Weight	Product Representation (Length Will Vary)
						Bolt	Qty.	T-Nut	Qty.	Washer	Qty.		
2533	15	1515-ULS	1.500"	1.500"	6.000"	3112	2	3278	2	3260	2	.568 lb	
2533-Black	15	1515-ULS-Black	1.500"	1.500"	6.000"	3112	2	3278	2	3260	2	.568 lb	
2534	15	1515-ULS	1.500"	1.500"	12.000"	3112	2	3278	2	3260	2	1.036 lb	
2534-Black	15	1515-ULS-Black	1.500"	1.500"	12.000"	3112	2	3278	2	3260	2	1.036 lb	
2537	15	1515-ULS	1.500"	1.500"	18.000"	3112	2	3278	2	3260	2	1.504 lb	
2537-Black	15	1515-ULS-Black	1.500"	1.500"	18.000"	3112	2	3278	2	3260	2	1.504 lb	
2538	15	1515-ULS	1.500"	1.500"	24.000"	3112	2	3278	2	3260	2	1.972 lb	
2538-Black	15	1515-ULS-Black	1.500"	1.500"	24.000"	3112	2	3278	2	3260	2	1.972 lb	
2527	15	1515-UL	1.500"	1.500"	6.000"	3112	2	3278	2	3260	2	.579 lb	
2527-Black	15	1515-UL-Black	1.500"	1.500"	6.000"	3112	2	3278	2	3260	2	.579 lb	
2528	15	1515-UL	1.500"	1.500"	12.000"	3112	2	3278	2	3260	2	1.053 lb	
2528-Black	15	1515-UL-Black	1.500"	1.500"	12.000"	3112	2	3278	2	3260	2	1.053 lb	
2529	15	1515-UL	1.500"	1.500"	18.000"	3112	2	3278	2	3260	2	1.529 lb	
2529-Black	15	1515-UL-Black	1.500"	1.500"	18.000"	3112	2	3278	2	3260	2	1.529 lb	
2532	15	1515-UL	1.500"	1.500"	24.000"	3112	2	3278	2	3260	2	2.006 lb	
2532-Black	15	1515-UL-Black	1.500"	1.500"	24.000"	3112	2	3278	2	3260	2	2.006 lb	
2539	15	1515-LS	1.500"	1.500"	6.000"	3112	2	3278	2	3260	2	.626 lb	
2539-Black	15	1515-LS-Black	1.500"	1.500"	6.000"	3112	2	3278	2	3260	2	.626 lb	
2542	15	1515-LS	1.500"	1.500"	12.000"	3112	2	3278	2	3260	2	1.115 lb	
2542-Black	15	1515-LS-Black	1.500"	1.500"	12.000"	3112	2	3278	2	3260	2	1.115 lb	
2543	15	1515-LS	1.500"	1.500"	18.000"	3112	2	3278	2	3260	2	1.679 lb	
2543-Black	15	1515-LS-Black	1.500"	1.500"	18.000"	3112	2	3278	2	3260	2	1.679 lb	
2544	15	1515-LS	1.500"	1.500"	24.000"	3112	2	3278	2	3260	2	2.206 lb	
2544-Black	15	1515-LS-Black	1.500"	1.500"	24.000"	3112	2	3278	2	3260	2	2.206 lb	
2562	15	1515-Lite	1.500"	1.500"	6.000"	3112	2	3278	2	3260	2	.447 lb	
2562-Black	15	1515-Lite-Black	1.500"	1.500"	6.000"	3112	2	3278	2	3260	2	.447 lb	
2561	15	1515-Lite	1.500"	1.500"	12.000"	3112	2	3278	2	3260	2	1.168 lb	
2561-Black	15	1515-Lite-Black	1.500"	1.500"	12.000"	3112	2	3278	2	3260	2	1.168 lb	
2563	15	1515-Lite	1.500"	1.500"	18.000"	3112	2	3278	2	3260	2	1.702 lb	
2563-Black	15	1515-Lite-Black	1.500"	1.500"	18.000"	3112	2	3278	2	3260	2	1.702 lb	
2564	15	1515-Lite	1.500"	1.500"	24.000"	3112	2	3278	2	3260	2	2.236 lb	
2564-Black	15	1515-Lite-Black	1.500"	1.500"	24.000"	3112	2	3278	2	3260	2	2.236 lb	
2546	15	1515-S	1.500"	1.500"	6.000"	3112	2	3278	2	3260	2	.787 lb	
2546-Black	15	1515-S-Black	1.500"	1.500"	6.000"	3112	2	3278	2	3260	2	.787 lb	
2547	15	1515-S	1.500"	1.500"	12.000"	3112	2	3278	2	3260	2	1.475 lb	
2547-Black	15	1515-S-Black	1.500"	1.500"	12.000"	3112	2	3278	2	3260	2	1.475 lb	
2548	15	1515-S	1.500"	1.500"	18.000"	3112	2	3278	2	3260	2	2.162 lb	
2548-Black	15	1515-S-Black	1.500"	1.500"	18.000"	3112	2	3278	2	3260	2	2.162 lb	
2549	15	1515-S	1.500"	1.500"	24.000"	3112	2	3278	2	3260	2	2.850 lb	
2549-Black	15	1515-S-Black	1.500"	1.500"	24.000"	3112	2	3278	2	3260	2	2.850 lb	
2525	15	1515	1.500"	1.500"	6.000"	3112	2	3278	2	3260	2	.706 lb	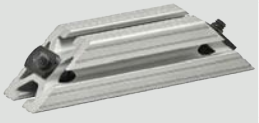
2525-Black	15	1515-Black	1.500"	1.500"	6.000"	3112	2	3278	2	3260	2	.706 lb	
2535	15	1515	1.500"	1.500"	12.000"	3112	2	3278	2	3260	2	1.492 lb	
2535-Black	15	1515-Black	1.500"	1.500"	12.000"	3112	2	3278	2	3260	2	1.492 lb	
2545	15	1515	1.500"	1.500"	18.000"	3112	2	3278	2	3260	2	2.188 lb	
2545-Black	15	1515-Black	1.500"	1.500"	18.000"	3112	2	3278	2	3260	2	2.188 lb	
2555	15	1515	1.500"	1.500"	24.000"	3112	2	3278	2	3260	2	2.884 lb	
2555-Black	15	1515-Black	1.500"	1.500"	24.000"	3112	2	3278	2	3260	2	2.884 lb	

View page 8-5 for dimensional drawing

80/20 BUILD YOUR IDEA
More on 80/20® products available at 8020.net

45 Degree Supports (Continued)

Part No.	Series	Profile	A	B	C	D (Included Hardware)						Weight	Product Representation (Length Will Vary)
						Bolt	Qty.	T-Nut	Qty.	Washer	Qty.		
2551	15	1530-LS	1.500"	3.000"	6.000"	3112	4	3278	4	3260	4	1.216 lb	
2551-Black	15	1530-LS-Black	1.500"	3.000"	6.000"	3112	4	3278	4	3260	4	1.216 lb	
2552	15	1530-LS	1.500"	3.000"	12.000"	3112	4	3278	4	3260	4	2.233 lb	
2552-Black	15	1530-LS-Black	1.500"	3.000"	12.000"	3112	4	3278	4	3260	4	2.233 lb	
2553	15	1530-LS	1.500"	3.000"	18.000"	3112	4	3278	4	3260	4	3.250 lb	
2553-Black	15	1530-LS-Black	1.500"	3.000"	18.000"	3112	4	3278	4	3260	4	3.250 lb	
2554	15	1530-LS	1.500"	3.000"	24.000"	3112	4	3278	4	3260	4	4.267 lb	
2554-Black	15	1530-LS-Black	1.500"	3.000"	24.000"	3112	4	3278	4	3260	4	4.267 lb	
2578	15	1530-Lite	1.500"	3.000"	6.000"	3112	4	3278	4	3260	4	.865 lb	
2578-Black	15	1530-Lite-Black	1.500"	3.000"	6.000"	3112	4	3278	4	3260	4	.865 lb	
2579	15	1530-Lite	1.500"	3.000"	12.000"	3112	4	3278	4	3260	4	2.263 lb	
2579-Black	15	1530-Lite-Black	1.500"	3.000"	12.000"	3112	4	3278	4	3260	4	2.263 lb	
2580	15	1530-Lite	1.500"	3.000"	18.000"	3112	4	3278	4	3260	4	3.295 lb	
2580-Black	15	1530-Lite-Black	1.500"	3.000"	18.000"	3112	4	3278	4	3260	4	3.295 lb	
2581	15	1530-Lite	1.500"	3.000"	24.000"	3112	4	3278	4	3260	4	4.327 lb	
2581-Black	15	1530-Lite-Black	1.500"	3.000"	24.000"	3112	4	3278	4	3260	4	4.327 lb	
2569	15	1530-S	1.500"	3.000"	6.000"	3112	4	3278	4	3260	4	1.429 lb	
2569-Black	15	1530-S-Black	1.500"	3.000"	6.000"	3112	4	3278	4	3260	4	1.429 lb	
2576	15	1530-S	1.500"	3.000"	12.000"	3112	4	3278	4	3260	4	2.658 lb	
2576-Black	15	1530-S-Black	1.500"	3.000"	12.000"	3112	4	3278	4	3260	4	2.658 lb	
2577	15	1530-S	1.500"	3.000"	18.000"	3112	4	3278	4	3260	4	3.887 lb	
2577-Black	15	1530-S-Black	1.500"	3.000"	18.000"	3112	4	3278	4	3260	4	3.887 lb	
2582	15	1530-S	1.500"	3.000"	24.000"	3112	4	3278	4	3260	4	5.117 lb	
2582-Black	15	1530-S-Black	1.500"	3.000"	24.000"	3112	4	3278	4	3260	4	5.117 lb	
2530	15	1530	1.500"	3.000"	6.000"	3112	4	3278	4	3260	4	1.021 lb	
2530-Black	15	1530-Black	1.500"	3.000"	6.000"	3112	4	3278	4	3260	4	1.021 lb	
2540	15	1530	1.500"	3.000"	12.000"	3112	4	3278	4	3260	4	2.707 lb	
2540-Black	15	1530-Black	1.500"	3.000"	12.000"	3112	4	3278	4	3260	4	2.707 lb	
2550	15	1530	1.500"	3.000"	18.000"	3112	4	3278	4	3260	4	3.961 lb	
2550-Black	15	1530-Black	1.500"	3.000"	18.000"	3112	4	3278	4	3260	4	3.961 lb	
2560	15	1530	1.500"	3.000"	24.000"	3112	4	3278	4	3260	4	5.215 lb	
2560-Black	15	1530-Black	1.500"	3.000"	24.000"	3112	4	3278	4	3260	4	5.215 lb	
2526	15	1545	1.500"	4.500"	6.000"	3112	6	3278	6	3260	6	1.495 lb	
2526-Black	15	1545-Black	1.500"	4.500"	6.000"	3112	6	3278	6	3260	6	1.495 lb	
2531	15	1545	1.500"	4.500"	12.000"	3112	6	3278	6	3260	6	3.199 lb	
2531-Black	15	1545-Black	1.500"	4.500"	12.000"	3112	6	3278	6	3260	6	3.199 lb	
2536	15	1545	1.500"	4.500"	18.000"	3112	6	3278	6	3260	6	6.203 lb	
2536-Black	15	1545-Black	1.500"	4.500"	18.000"	3112	6	3278	6	3260	6	6.203 lb	
2541	15	1545	1.500"	4.500"	24.000"	3112	6	3278	6	3260	6	8.171 lb	
2541-Black	15	1545-Black	1.500"	4.500"	24.000"	3112	6	3278	6	3260	6	8.171 lb	
20-2565	20	20-2020	20.00mm	20.00mm	160.00mm	11-5512	2	14122	2	11-6040	2	.0790 kg	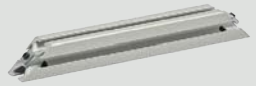
20-2565-Black	20	20-2020-Black	20.00mm	20.00mm	160.00mm	11-5512	2	14122	2	11-6040	2	.0790 kg	
20-2570	20	20-2020	20.00mm	20.00mm	320.00mm	11-5512	2	14122	2	11-6040	2	.1324 kg	
20-2570-Black	20	20-2020-Black	20.00mm	20.00mm	320.00mm	11-5512	2	14122	2	11-6040	2	.1324 kg	
20-2575	20	20-2020	20.00mm	20.00mm	480.00mm	11-5512	2	14122	2	11-6040	2	.2186 kg	
20-2575-Black	20	20-2020-Black	20.00mm	20.00mm	480.00mm	11-5512	2	14122	2	11-6040	2	.2186 kg	
20-2566	20	20-2040	20.00mm	40.00mm	160.00mm	11-5512	4	14122	4	11-6040	4	.1360 kg	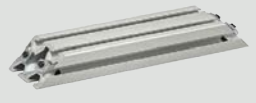
20-2566-Black	20	20-2040-Black	20.00mm	40.00mm	160.00mm	11-5512	4	14122	4	11-6040	4	.1360 kg	
20-2567	20	20-2040	20.00mm	40.00mm	320.00mm	11-5512	4	14122	4	11-6040	4	.2522 kg	
20-2567-Black	20	20-2040-Black	20.00mm	40.00mm	320.00mm	11-5512	4	14122	4	11-6040	4	.2522 kg	
20-2568	20	20-2040	20.00mm	40.00mm	480.00mm	11-5512	4	14122	4	11-6040	4	.3579 kg	
20-2568-Black	20	20-2040-Black	20.00mm	40.00mm	480.00mm	11-5512	4	14122	4	11-6040	4	.3579 kg	

View page 8-5 for dimensional drawing

Accessories

45 Degree Supports (Continued)

Part No.	Series	Profile	A	B	C	D (Included Hardware)						Weight	Product Representation (Length Will Vary)
						Bolt	Qty.	T-Nut	Qty.	Washer	Qty.		
25-2565	25	25-2525	25.00mm	25.00mm	160.00mm	13-6516	2	3859	2	13-6045	2	.1173 kg	
25-2565-Black	25	25-2525-Black	25.00mm	25.00mm	160.00mm	13-6516	2	3859	2	13-6045	2	.1173 kg	
25-2570	25	25-2525	25.00mm	25.00mm	320.00mm	13-6516	2	3859	2	13-6045	2	.2312 kg	
25-2570-Black	25	25-2525-Black	25.00mm	25.00mm	320.00mm	13-6516	2	3859	2	13-6045	2	.2312 kg	
25-2575	25	25-2525	25.00mm	25.00mm	480.00mm	13-6516	2	3859	2	13-6045	2	.3274 kg	
25-2575-Black	25	25-2525-Black	25.00mm	25.00mm	480.00mm	13-6516	2	3859	2	13-6045	2	.3274 kg	
25-2566	25	25-2550	25.00mm	50.00mm	160.00mm	13-6516	4	3859	4	13-6045	4	.2045 kg	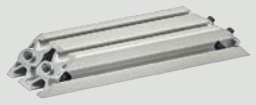
25-2566-Black	25	25-2550-Black	25.00mm	50.00mm	160.00mm	13-6516	4	3859	4	13-6045	4	.2045 kg	
25-2567	25	25-2550	25.00mm	50.00mm	320.00mm	13-6516	4	3859	4	13-6045	4	.4150 kg	
25-2567-Black	25	25-2550-Black	25.00mm	50.00mm	320.00mm	13-6516	4	3859	4	13-6045	4	.4150 kg	
25-2568	25	25-2550	25.00mm	50.00mm	480.00mm	13-6516	4	3859	4	13-6045	4	.5775 kg	
25-2568-Black	25	25-2550-Black	25.00mm	50.00mm	480.00mm	13-6516	4	3859	4	13-6045	4	.5775 kg	
30-2565	30	30-3030	30.00mm	30.00mm	160.00mm	11-8516	2	13025	2	11-6042	2	.1791 kg	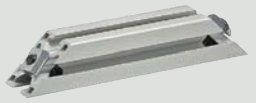
30-2565-Black	30	30-3030-Black	30.00mm	30.00mm	160.00mm	11-8516	2	13025	2	11-6042	2	.1791 kg	
30-2570	30	30-3030	30.00mm	30.00mm	320.00mm	11-8516	2	13025	2	11-6042	2	.3184 kg	
30-2570-Black	30	30-3030-Black	30.00mm	30.00mm	320.00mm	11-8516	2	13025	2	11-6042	2	.3184 kg	
30-2575	30	30-3030	30.00mm	30.00mm	480.00mm	11-8516	2	13025	2	11-6042	2	.4576 kg	
30-2575-Black	30	30-3030-Black	30.00mm	30.00mm	480.00mm	11-8516	2	13025	2	11-6042	2	.4576 kg	
30-2566	30	30-3060	30.00mm	60.00mm	160.00mm	11-8516	4	13025	4	11-6042	4	.1718 kg	
30-2566-Black	30	30-3060-Black	30.00mm	60.00mm	160.00mm	11-8516	4	13025	4	11-6042	4	.1718 kg	
30-2567	30	30-3060	30.00mm	60.00mm	320.00mm	11-8516	4	13025	4	11-6042	4	.5421 kg	
30-2567-Black	30	30-3060-Black	30.00mm	60.00mm	320.00mm	11-8516	4	13025	4	11-6042	4	.5421 kg	
30-2568	30	30-3060	30.00mm	60.00mm	480.00mm	11-8516	4	13025	4	11-6042	4	.8505 kg	
30-2568-Black	30	30-3060-Black	30.00mm	60.00mm	480.00mm	11-8516	4	13025	4	11-6042	4	.8505 kg	
30-2569	30	30-3060	30.00mm	60.00mm	640.00mm	11-8516	4	13025	4	11-6042	4	1.1075 kg	
30-2569-Black	30	30-3060-Black	30.00mm	60.00mm	640.00mm	11-8516	4	13025	4	11-6042	4	1.1075 kg	
40-2525	40	40-4040	40.00mm	40.00mm	160.00mm	13-8518	2	3838	2	13-6042	2	.3099 kg	
40-2525-Black	40	40-4040-Black	40.00mm	40.00mm	160.00mm	13-8518	2	3838	2	13-6042	2	.3099 kg	
40-2535	40	40-4040	40.00mm	40.00mm	320.00mm	13-8518	2	3838	2	13-6042	2	.7842 kg	
40-2535-Black	40	40-4040-Black	40.00mm	40.00mm	320.00mm	13-8518	2	3838	2	13-6042	2	.7842 kg	
40-2545	40	40-4040	40.00mm	40.00mm	480.00mm	13-8518	2	3838	2	13-6042	2	.8981 kg	
40-2545-Black	40	40-4040-Black	40.00mm	40.00mm	480.00mm	13-8518	2	3838	2	13-6042	2	.8981 kg	
40-2555	40	40-4040	40.00mm	40.00mm	640.00mm	13-8518	2	3838	2	13-6042	2	1.2165 kg	
40-2555-Black	40	40-4040-Black	40.00mm	40.00mm	640.00mm	13-8518	2	3838	2	13-6042	2	1.2165 kg	
40-2562	40	40-4040-Lite	40.00mm	40.00mm	160.00mm	13-8518	2	3838	2	13-6042	2	.2414 kg	
40-2562-Black	40	40-4040-Lite-Black	40.00mm	40.00mm	160.00mm	13-8518	2	3838	2	13-6042	2	.2414 kg	
40-2561	40	40-4040-Lite	40.00mm	40.00mm	320.00mm	13-8518	2	3838	2	13-6042	2	.5175 kg	
40-2561-Black	40	40-4040-Lite-Black	40.00mm	40.00mm	320.00mm	13-8518	2	3838	2	13-6042	2	.5175 kg	
40-2563	40	40-4040-Lite	40.00mm	40.00mm	480.00mm	13-8518	2	3838	2	13-6042	2	.9001 kg	
40-2563-Black	40	40-4040-Lite-Black	40.00mm	40.00mm	480.00mm	13-8518	2	3838	2	13-6042	2	.9001 kg	
40-2564	40	40-4040-Lite	40.00mm	40.00mm	640.00mm	13-8518	2	3838	2	13-6042	2	.8772 kg	
40-2564-Black	40	40-4040-Lite-Black	40.00mm	40.00mm	640.00mm	13-8518	2	3838	2	13-6042	2	.8772 kg	
40-2530	40	40-4080	40.00mm	80.00mm	160.00mm	13-8518	4	3838	4	13-6042	4	.7411 kg	
40-2530-Black	40	40-4080-Black	40.00mm	80.00mm	160.00mm	13-8518	4	3838	4	13-6042	4	.7411 kg	
40-2540	40	40-4080	40.00mm	80.00mm	320.00mm	13-8518	4	3838	4	13-6042	4	1.1910 kg	
40-2540-Black	40	40-4080-Black	40.00mm	80.00mm	320.00mm	13-8518	4	3838	4	13-6042	4	1.1910 kg	
40-2550	40	40-4080	40.00mm	80.00mm	480.00mm	13-8518	4	3838	4	13-6042	4	1.9075 kg	
40-2550-Black	40	40-4080-Black	40.00mm	80.00mm	480.00mm	13-8518	4	3838	4	13-6042	4	1.9075 kg	
40-2560	40	40-4080	40.00mm	80.00mm	640.00mm	13-8518	4	3838	4	13-6042	4	2.7006 kg	
40-2560-Black	40	40-4080-Black	40.00mm	80.00mm	640.00mm	13-8518	4	3838	4	13-6042	4	2.7006 kg	

View page 8-5 for dimensional drawing

80/20 BUILD YOUR IDEA
More on 80/20® products available at 8020.net

45 Degree Supports (Continued)

Part No.	Series	Profile	A	B	C	D (Included Hardware)						Weight	Product Representation (Length Will Vary)
						Bolt	Qty.	T-Nut	Qty.	Washer	Qty.		
40-2578	40	40-4080-Lite	40.00mm	80.00mm	160.00mm	13-8518	4	3838	4	13-6042	4	.5919 kg	
40-2578-Black	40	40-4080-Lite-Black	40.00mm	80.00mm	160.00mm	13-8518	4	3838	4	13-6042	4	.5919 kg	
40-2579	40	40-4080-Lite	40.00mm	80.00mm	320.00mm	13-8518	4	3838	4	13-6042	4	1.2491 kg	
40-2579-Black	40	40-4080-Lite-Black	40.00mm	80.00mm	320.00mm	13-8518	4	3838	4	13-6042	4	1.2491 kg	
40-2580	40	40-4080-Lite	40.00mm	80.00mm	480.00mm	13-8518	4	3838	4	13-6042	4	1.3580 kg	
40-2580-Black	40	40-4080-Lite-Black	40.00mm	80.00mm	480.00mm	13-8518	4	3838	4	13-6042	4	1.3580 kg	
40-2581	40	40-4080-Lite	40.00mm	80.00mm	640.00mm	13-8518	4	3838	4	13-6042	4	1.9590 kg	
40-2581-Black	40	40-4080-Lite-Black	40.00mm	80.00mm	640.00mm	13-8518	4	3838	4	13-6042	4	1.9590 kg	
45-2525	45	45-4545	45.00mm	45.00mm	160.00mm	11-8520	2	13049	2	11-6042	2	.2818 kg	
45-2525-Black	45	45-4545-Black	45.00mm	45.00mm	160.00mm	11-8520	2	13049	2	11-6042	2	.2818 kg	
45-2535	45	45-4545	45.00mm	45.00mm	320.00mm	11-8520	2	13049	2	11-6042	2	.7378 kg	
45-2535-Black	45	45-4545-Black	45.00mm	45.00mm	320.00mm	11-8520	2	13049	2	11-6042	2	.7378 kg	
45-2545	45	45-4545	45.00mm	45.00mm	480.00mm	11-8520	2	13049	2	11-6042	2	.7933 kg	
45-2545-Black	45	45-4545-Black	45.00mm	45.00mm	480.00mm	11-8520	2	13049	2	11-6042	2	.7933 kg	
45-2555	45	45-4545	45.00mm	45.00mm	640.00mm	11-8520	2	13049	2	11-6042	2	1.0358 kg	
45-2555-Black	45	45-4545-Black	45.00mm	45.00mm	640.00mm	11-8520	2	13049	2	11-6042	2	1.0358 kg	
45-2562	45	45-4545-Lite	45.00mm	45.00mm	160.00mm	11-8520	2	13049	2	11-6042	2	.4000 kg	
45-2562-Black	45	45-4545-Lite-Black	45.00mm	45.00mm	160.00mm	11-8520	2	13049	2	11-6042	2	.4000 kg	
45-2561	45	45-4545-Lite	45.00mm	45.00mm	320.00mm	11-8520	2	13049	2	11-6042	2	.4871 kg	
45-2561-Black	45	45-4545-Lite-Black	45.00mm	45.00mm	320.00mm	11-8520	2	13049	2	11-6042	2	.4871 kg	
45-2563	45	45-4545-Lite	45.00mm	45.00mm	480.00mm	11-8520	2	13049	2	11-6042	2	1.0677 kg	
45-2563-Black	45	45-4545-Lite-Black	45.00mm	45.00mm	480.00mm	11-8520	2	13049	2	11-6042	2	1.0677 kg	
45-2564	45	45-4545-Lite	45.00mm	45.00mm	640.00mm	11-8520	2	13049	2	11-6042	2	1.2820 kg	
45-2564-Black	45	45-4545-Lite-Black	45.00mm	45.00mm	640.00mm	11-8520	2	13049	2	11-6042	2	1.2820 kg	
45-2530	45	45-4590	45.00mm	90.00mm	160.00mm	11-8520	4	13049	4	11-6042	4	.7068 kg	
45-2530-Black	45	45-4590-Black	45.00mm	90.00mm	160.00mm	11-8520	4	13049	4	11-6042	4	.7068 kg	
45-2540	45	45-4590	45.00mm	90.00mm	320.00mm	11-8520	4	13049	4	11-6042	4	1.2820 kg	
45-2540-Black	45	45-4590-Black	45.00mm	90.00mm	320.00mm	11-8520	4	13049	4	11-6042	4	1.2820 kg	
45-2550	45	45-4590	45.00mm	90.00mm	480.00mm	11-8520	4	13049	4	11-6042	4	1.8572 kg	
45-2550-Black	45	45-4590-Black	45.00mm	90.00mm	480.00mm	11-8520	4	13049	4	11-6042	4	1.8572 kg	
45-2560	45	45-4590	45.00mm	90.00mm	640.00mm	11-8520	4	13049	4	11-6042	4	2.4324 kg	
45-2560-Black	45	45-4590-Black	45.00mm	90.00mm	640.00mm	11-8520	4	13049	4	11-6042	4	2.4324 kg	

View page 8-5 for dimensional drawing

Accessories

45 Degree Support Connector

- Used to reinforce 90 degree connections; designed for use with 40mm by 40mm profiles
- Requires end tap machining services (pg. 10-3)

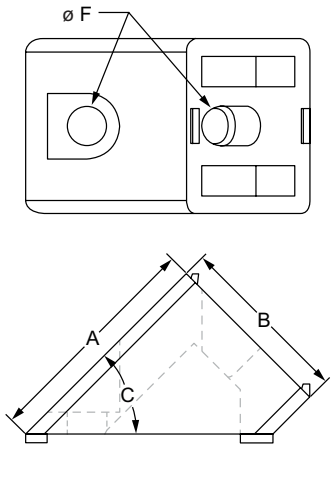

Part No.	Series	Material	Finish	A	B	C	D	E	F	Weight
14118	40	Aluminum	Clear Powder Coat	52.00mm	40.00mm	45°	2.00mm	8.00mm	9.00mm	.2123 kg

Required Machining Services

Machining Type	Profile Machined	Reference Page
Tap Profile End	Profile End	10-3

Suggested Hardware (Mount to T-Slot)

Part No.	Series	Qty.	Description	T-Nut	Location
11-8520	40	1	M8 x 20mm SHCS	—	To Profile End
75-3621	40	1	M8 x 16mm SHCS	Economy	To T-Slot

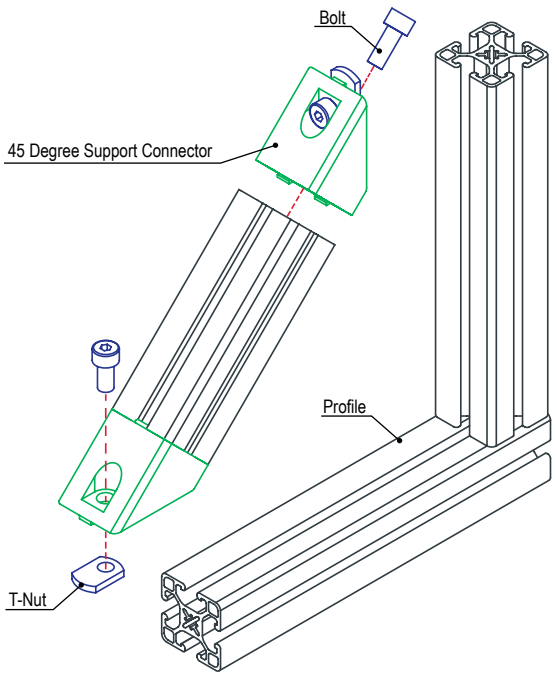

80/20 BUILD YOUR IDEA
More on 80/20® products available at 8020.net

End Cap with Push-In Fastener

- Installed with a push-in fastener, self-tapping screw (pg. 8-12) or into a tapped hole using a BHSCS
- Blank end cap available in black

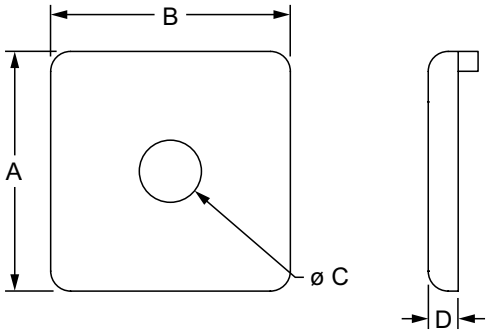

80/20 Black Cap	Red Cap	Blue Cap	Yellow Cap	Gray Cap	Black Cap	Series	A	B	C	D	Weight
2015	2015RED	2015BLU	2015YEL	2015GRA	2015-Plain	10	1.000"	1.000"	.257"	.125"	.008 lb
2025	2025RED	2025BLU	2025YEL	2025GRA	2025-Plain	10	1.000"	2.000"	.257"	.125"	.009 lb
2026	2026RED	2026BLU	2026YEL	2026GRA	2026-Plain	10	1.000"	3.000"	.257"	.125"	.013 lb
2028	2028RED	2028BLU	2028YEL	2028GRA	2028-Plain	10	2.000"	2.000"	.257"	.125"	.017 lb
2030	2030RED	2030BLU	2030YEL	2030GRA	2030-Plain	15	1.500"	1.500"	.328"	.188"	.013 lb
2045	2045RED	2045BLU	2045YEL	2045GRA	2045-Plain	15	1.500"	3.000"	.328"	.188"	.031 lb
2046	2046RED	2046BLU	2046YEL	2046GRA	2046-Plain	15	1.500"	4.500"	.328"	.188"	.049 lb
2050	2050RED	2050BLU	2050YEL	2050GRA	2050-Plain	15	3.000"	3.000"	.328"	.188"	.064 lb

80/20 Black Cap	Black Cap	Series	Material	Finish	Process	A	B	C	D	Weight
25-2015	25-2015-Plain	25	ABS	Matte	Molded	25.00mm	25.00mm	6.80mm	3.00mm	.0044 kg
25-2025	25-2025-Plain	25				25.00mm	50.00mm	6.80mm	3.00mm	.0068 kg
25-2028	25-2028-Plain	25				50.00mm	50.00mm	6.80mm	3.00mm	.0034 kg
40-2030	40-2030-Plain	40				40.00mm	40.00mm	8.40mm	4.50mm	.0068 kg
40-2045	40-2045-Plain	40				40.00mm	80.00mm	8.50mm	4.50mm	.0132 kg
40-2050	40-2050-Plain	40				80.00mm	80.00mm	8.50mm	4.50mm	.0282 kg

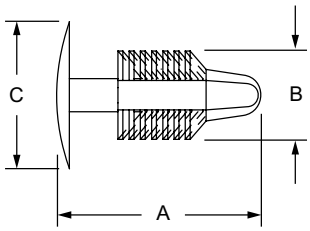

3272, 25-3272

3274, 40-3274

Push-In Fastener

Black Cap	Red Cap	Blue Cap	Yellow Cap	Gray Cap	Series	Material	A	B	C	Weight
3272	3272RED	3272BLU	3272YEL	3272GRA	10	Plastic	.555"	.240"	.400"	.0004 lb
3274	3274RED	3274BLU	3274YEL	3274GRA	15		.895"	.300"	.700"	.0020 lb
25-3272	—	—	—	—	25		14.10mm	6.10mm	10.16mm	.0002 kg
40-3274	—	—	—	—	40		22.73mm	7.62mm	17.88mm	.0009 kg

Accessories

End Cap with Push-In Fastener

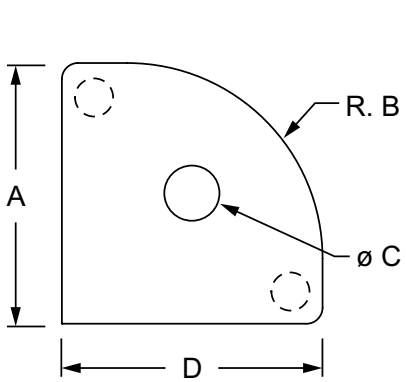

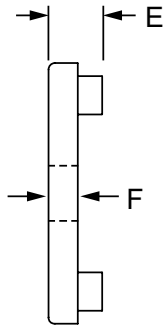

80/20 Black Cap	Red Cap	Blue Cap	Yellow Cap	Gray Cap	Black Cap	Series	A	B	C	D	E	F	Weight
2022	2022RED	2022BLU	2022YEL	2022GRA	2022-Plain	10	1.000"	.727"	.257"	1.000"	.213"	.125"	.004 lb
2035	2035RED	2035BLU	2035YEL	2035GRA	2035-Plain	15	1.500"	1.125"	.328"	1.500"	.283"	.188"	.016 lb
40-2033	—	—	—	—	—	40	40.00mm	30.00mm	8.45mm	40.00mm	8.25mm	4.50mm	.0073 kg

Material Specifications

Material	Finish	Process
ABS	Matte	Molded

Self Tapping End Cap Screw (STECS)

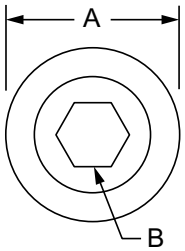

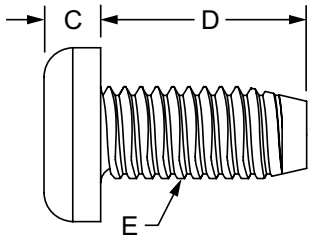

Black Zinc

Bright Zinc

Part No.	Series	Material	Finish	A	B	C	D (Length)	E (Thread)	Weight
3766	10	Steel	Bright Zinc	.428"	.157"	.127"	.360"	12-24	.005 lb
3266	10		Black Zinc	.428"	.157"	.127"	.360"	12-24	.005 lb
3767	15		Bright Zinc	.428"	.157"	.127"	.360"	M7 x 1.0	.008 lb
3267	15		Black Zinc	.428"	.157"	.127"	.360"	M7 x 1.0	.008 lb
25-3766	25		Bright Zinc	10.90mm	4.00mm	3.23mm	9.12mm	12-24	.0025 kg
25-3266	25		Black Zinc	10.90mm	4.00mm	3.23mm	9.12mm	12-24	.0025 kg
40-3767	40		Bright Zinc	10.90mm	4.00mm	3.23mm	9.14mm	M7 x 1.0	.0037 kg
40-3267	40		Black Zinc	10.90mm	4.00mm	3.23mm	9.14mm	M7 x 1.0	.0037 kg

80/20 BUILD YOUR IDEA
More on 80/20® products available at 8020.net

End Cap with Molded Push-In Stem

- Installed with a molded push-in stem
- Blank end cap available in black

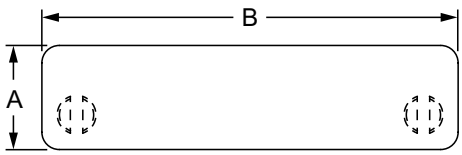

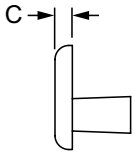

80/20 Black Cap	Plain Black Cap	Series	Color	Material	Finish	Process	A	B	C	Weight
2036	—	15	Black	ABS	Matte	Molded	.750"	1.500"	.125"	.006 lb
2037	—	15					.750"	3.000"	.125"	.010 lb
—	12305	20					20.00mm	20.00mm	2.50mm	.0009 kg
—	12306	20					20.00mm	40.00mm	2.50mm	.0021 kg
—	12307	20					40.00mm	40.00mm	2.50mm	.0041 kg
—	12271	30					30.00mm	30.00mm	4.00mm	.0038 kg
—	12302	30					30.00mm	60.00mm	3.50mm	.0034 kg
—	12303	30					60.00mm	60.00mm	4.00mm	.0154 kg
40-2035*	40-2035-Plain*	40					40.00mm	40.00mm	4.50mm	.0054 kg
—	12258*	40					40.00mm	40.00mm	4.00mm	.0054 kg
—	12260**	40					40.00mm	40.00mm	4.00mm	.0068 kg
—	12261	40					40.00mm	80.00mm	4.00mm	.0136 kg
—	12290	40					40.00mm	120.00mm	4.00mm	.0218 kg
—	12298	40					80.00mm	160.00mm	4.00mm	.0619 kg
—	12262	45					45.00mm	45.00mm	4.00mm	.0082 kg
—	12259	45					45.00mm	90.00mm	4.00mm	.0200 kg
—	12269	45					90.00mm	90.00mm	4.00mm	.0448 kg

* Compatible with 40-4045-Lite
** Not compatible with UL profiles.

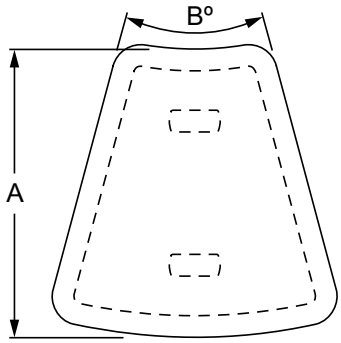

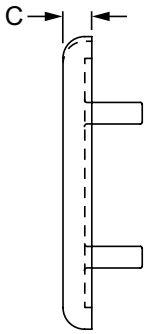

Black Cap	Series	Color	Material	Grade	Finish	Process	A	B	C	Weight
40-2037	40	Black	Nylon	PA6 GF30	Matte	Molded	40.00mm	30°	4.00mm	.0057 kg
40-2039	40						40.00mm	45°	4.00mm	.0084 kg
40-2043	40						40.00mm	60°	4.00mm	.0104 kg

Accessories

Screw-On End Cap

- Installed with a FHSCS that spreads pin to secure end cap
- Requires no machining

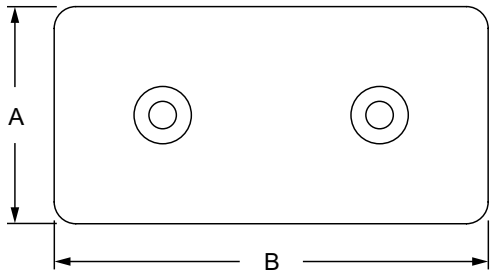

Black Cap	Series	Material	Grade	Finish	Process	A	B	C	Weight
12279	30	Nylon	PA6 GF30	Matte	Molded	30.00mm	60.00mm	4.00mm	.0073 kg
12283	45					45.00mm	45.00mm	4.00mm	.0088 kg
12286	45					45.00mm	90.00mm	4.00mm	.0174 kg
12287	45					90.00mm	90.00mm	4.00mm	.0345 kg

Suggested Hardware (Mount to Profile End)

Part No.	Series	Bolt	Qty.	Description
12279	30	11-4712	2	M4 x 12mm FHSCS
12283	45		1	
12286	45		2	
12287	45		4	

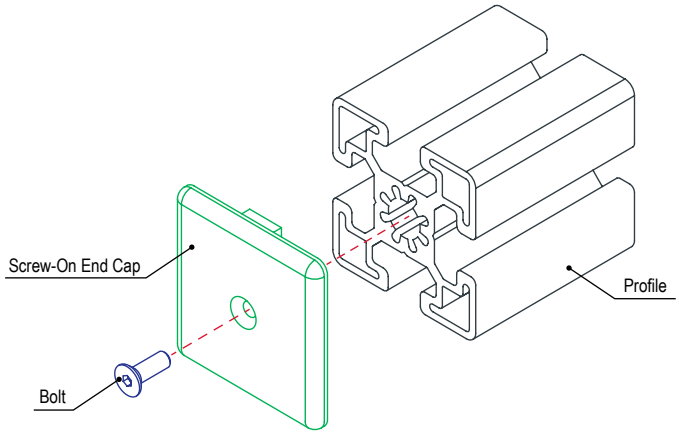

80/20 BUILD YOUR IDEA
More on 80/20® products available at 8020.net

3 Way - Corner Bracket Cover Cap

- Used with triangular corner bracket (3-120) and 3 way - rounded corner bracket (3-121)

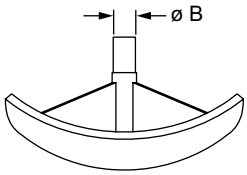

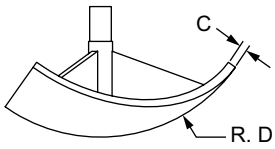

12043

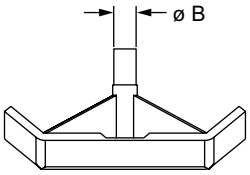

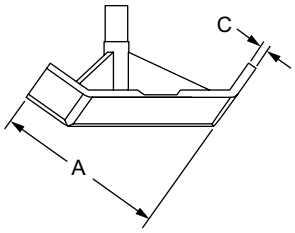

12044, 12047

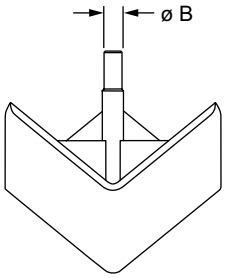

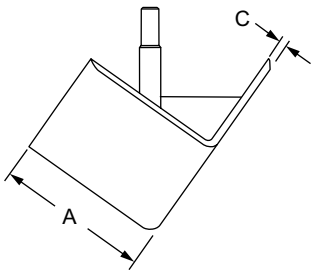

12041, 12045

Black Cap	Series	Material	Color	Connector	Profile	A	B	C	D	Weight
12043	15	Nylon	Black	14113	1517-LS, 1517	—	.197"	.079"	28.6°	.021 lb
12044	15			14113	1547	1.490"	.197"	.079"	—	.030 lb
12041	30			14112	30-3030	30.00mm	4.20mm	2.00mm	—	.0086 kg
12047	40			14114	40-4045-Lite	40.00mm	5.00mm	2.00mm	—	.0077 kg
12045	40			14114	40mm x 40mm Profiles	40.00mm	5.00mm	2.00mm	—	.0154 kg

Accessories

Ready Tube® End Cap

- Installed with a molded push-in stem

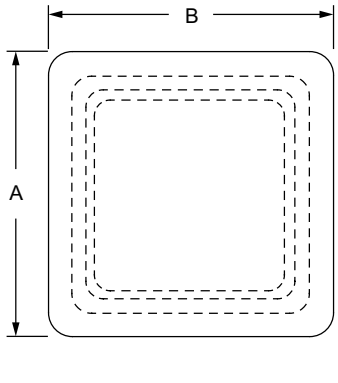

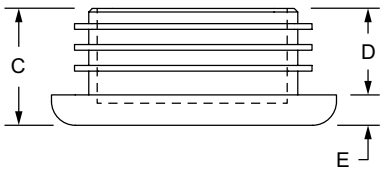

80/20 Black Cap	Black Cap	Series	Material	Process	A	B	C	D	E	Weight
9755	9755-Plain	RT	Low Density Polyethylene	Injection Molded	1.500"	1.500"	.615"	.455"	.160"	.015 lb

Quick Frame® End Cap

- Available in black or gray and pushes into Quick Frame profiles

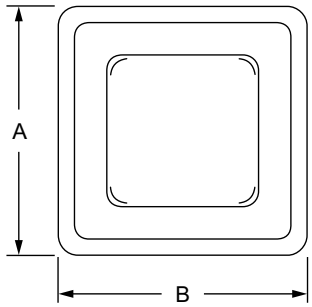

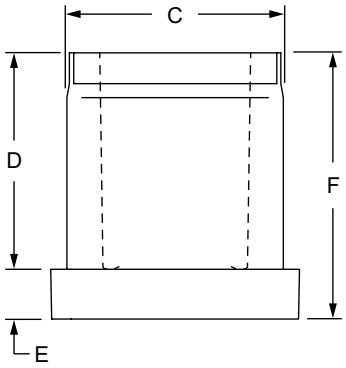

Part No.	Series	Material	Grade	Process	Color	A	B	C	D	E	F	Weight
9110	QF	Plastic	Nylon	Injection Molded	Gray	1.000"	1.000"	.850"	.870"	.200"	1.070"	.020 lb
9210	QF				Black	1.000"	1.000"	.850"	.870"	.200"	1.070"	.020 lb

80/20 BUILD YOUR IDEA
More on 80/20® products available at 8020.net

Aluminum T-slot Cover

- Installed with a soft faced mallet

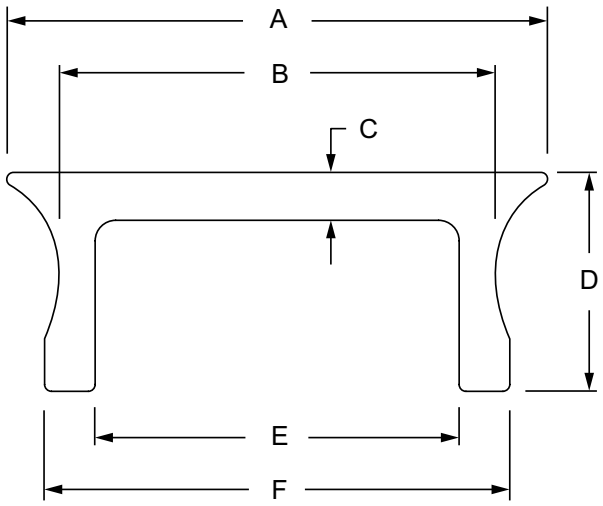

Part No.	Series	Color	A	B	C	D	E	F	Stock Length	Weight
2119	15	Clear	.395"	.319"	.035"	.160"	.266"	.340"	72.500"	.002 lb / in.
2119-Black	15	Black	.395"	.319"	.035"	.160"	.266"	.340"		.002 lb / in.
40-2119	40	Clear	10.02mm	8.11mm	.89mm	4.06mm	6.76mm	8.64mm	1841.50mm	.06758 kg / mm
40-2119-Black	40	Black	10.02mm	8.11mm	.89mm	4.06mm	6.76mm	8.64mm		.06758 kg / mm

Material Specifications

Material	Alloy	Finish	Process
Aluminum	6061-T6	Anodize	Extruded

Required Machining Services

Service No.	Service Description	Reference Page
7212	Cut to Length	10-2

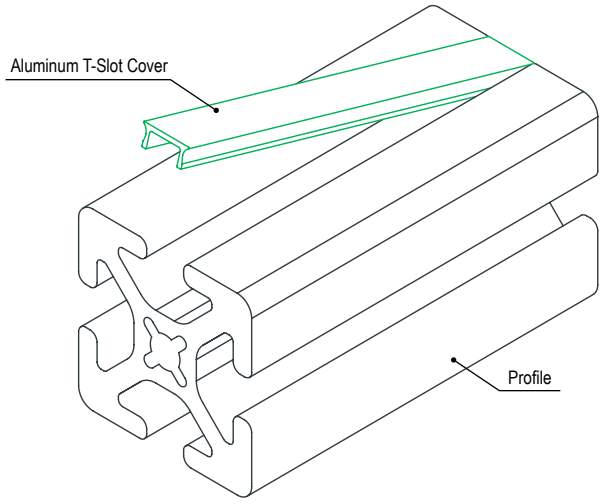

Accessories

Standard T-slot Cover

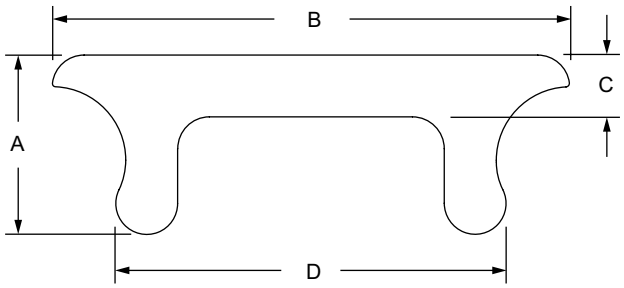

Part No.	Series	Color	Material	Finish	Process	A	B	C	D	Stock Length	Weight
2112	10	Yellow	PVC	Matte	Extruded	.102"	.338"	.035"	.266"	72.500"	.059 lb
2113	10	Black				.102"	.338"	.035"	.266"		.059 lb
2114	10	Gray				.102"	.338"	.035"	.266"		.059 lb
2109	15	Yellow	Polypropylene			.222"	.484"	.060"	.350"		.099 lb
2110	15	Black				.222"	.484"	.060"	.350"		.111 lb
2111	15	Gray				.222"	.484"	.060"	.350"		.106 lb
25-2112	25	Yellow	PVC			2.59mm	8.59mm	.89mm	6.76mm	1841.50mm	.0268 kg
25-2113	25	Black				2.59mm	8.59mm	.89mm	6.76mm		.0245 kg
25-2114	25	Gray				2.59mm	8.59mm	.89mm	6.76mm		.0268 kg
40-2109	40	Yellow	Polypropylene			5.64mm	12.29mm	1.52mm	8.89mm		.0481 kg
40-2110	40	Black				5.64mm	12.29mm	1.52mm	8.89mm		.0490 kg
40-2111	40	Gray				5.64mm	12.29mm	1.52mm	8.89mm		.0485 kg

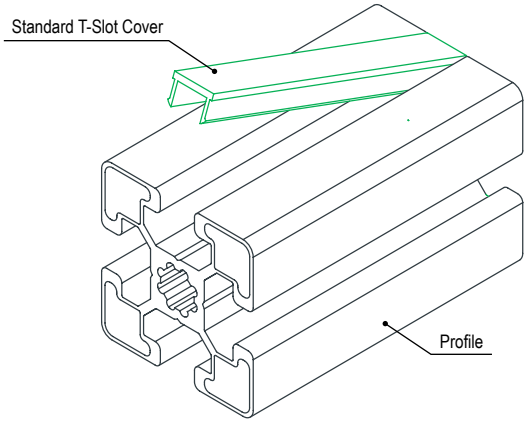

80/20 BUILD YOUR IDEA
More on 80/20® products available at 8020.net

Economy T-slot Cover

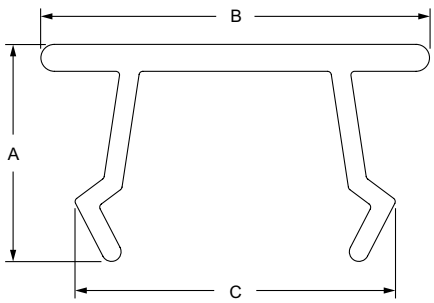

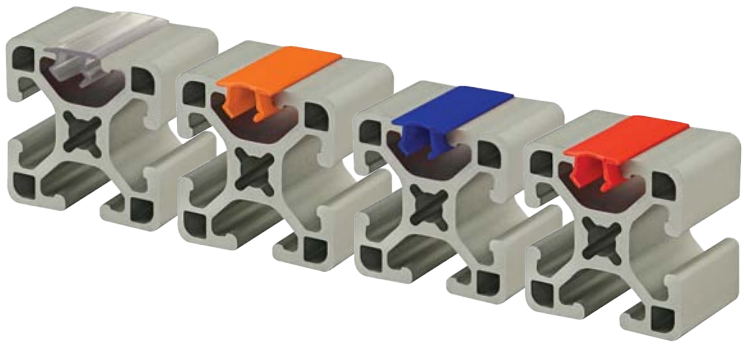

Part No.	Series	Color	Material	Finish	Process	A	B	C	Stock Length	Weight
2819	10	Yellow	PVC	Matte	Extruded	.211"	.430"	.313"	72.500"	.080 lb
2820	10	Black				.211"	.430"	.313"		.083 lb
2821	10	Gray				.211"	.430"	.313"		.076 lb
2818	10	Red				.211"	.430"	.313"		.098 lb
2817	10	Blue				.211"	.430"	.313"		.080 lb
2816	10	Orange				.211"	.430"	.313"		.091 lb
2822	15	Yellow				.282"	.505"	.416"		.131 lb
2823	15	Black				.282"	.505"	.416"		.133 lb
2824	15	Gray				.282"	.505"	.416"		.126 lb
2825	15	Red				.282"	.505"	.416"		.124 lb
2826	15	Blue				.282"	.505"	.416"		.126 lb
2827	15	Orange				.282"	.505"	.416"		.127 lb
2871	15 40	Clear				.283"	.505"	.416"		.126 lb
25-2819	25	Yellow				5.36mm	10.92mm	7.95mm	1841.50mm	.0354 kg
25-2820	25	Black				5.36mm	10.92mm	7.95mm		.0363 kg
25-2821	25	Gray				5.36mm	10.92mm	7.95mm		.0360 kg
25-2818	25	Red				5.36mm	10.92mm	7.95mm		.0443 kg
25-2817	25	Blue				5.36mm	10.92mm	7.95mm		.0386 kg
25-2816	25	Orange				5.36mm	10.92mm	7.95mm		.0411 kg
40-2822	40	Yellow				7.16mm	12.83mm	10.57mm		.0549 kg
40-2823	40	Black				7.16mm	12.83mm	10.57mm		.0467 kg
40-2824	40	Gray				7.16mm	12.83mm	10.57mm		.0521 kg
40-2825	40	Red				7.16mm	12.83mm	10.57mm		.0544 kg
40-2826	40	Blue				7.16mm	12.83mm	10.57mm		.0579 kg
40-2827	40	Orange				7.16mm	12.83mm	10.57mm		.0602 kg
14108	45	Yellow	Polypropylene			7.37mm	11.61mm	11.58mm	2000.00mm	.0514 kg
14107	45	Black				7.37mm	11.61mm	11.58mm		.0514 kg
14110	45	Gray				7.37mm	11.61mm	11.58mm		.0514 kg
14123	45	Red				7.37mm	11.61mm	11.58mm		.0514 kg
14121	45	Blue				7.37mm	11.61mm	11.58mm		.0514 kg

Accessories

Reduction T-slot Cover

- Installed with a soft faced mallet
- Also used as panel gasket

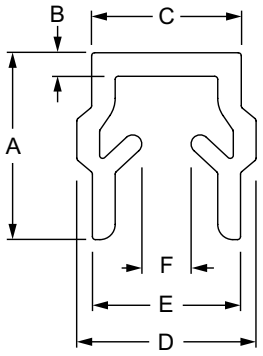

12004

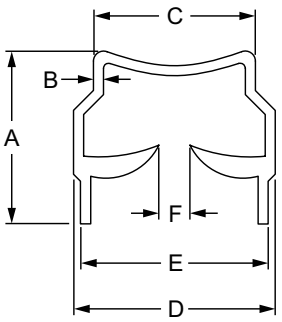

12003 & 14193

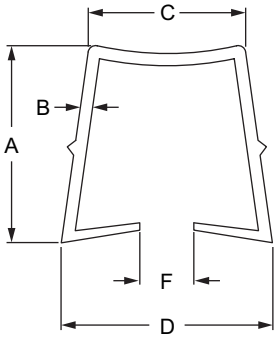

12013

Part No.	Series	Color	A	B	C	D	E	F	Stock Length	Gasket Panel Thickness	Weight
12004	20	Black	6.25mm	.79mm	5.00mm	6.00mm	4.95mm	1.65mm	2M	1 - 4mm	.0163 kg
12003	10 25		9.00mm	.60mm	6.10mm	7.30mm	6.40mm	.70mm		1 - 4mm	.0427 kg
14193	30		8.76mm	.51mm	8.20mm	10.21mm	9.50mm	1.57mm		4 - 6mm	.0358 kg
12013	45		12.80mm	.79mm	10.21mm	13.69mm	—	3.51mm		2 - 6mm	.0548 kg

Material Specifications

Material	Finish	Process
Polypropylene	Matte	Extruded

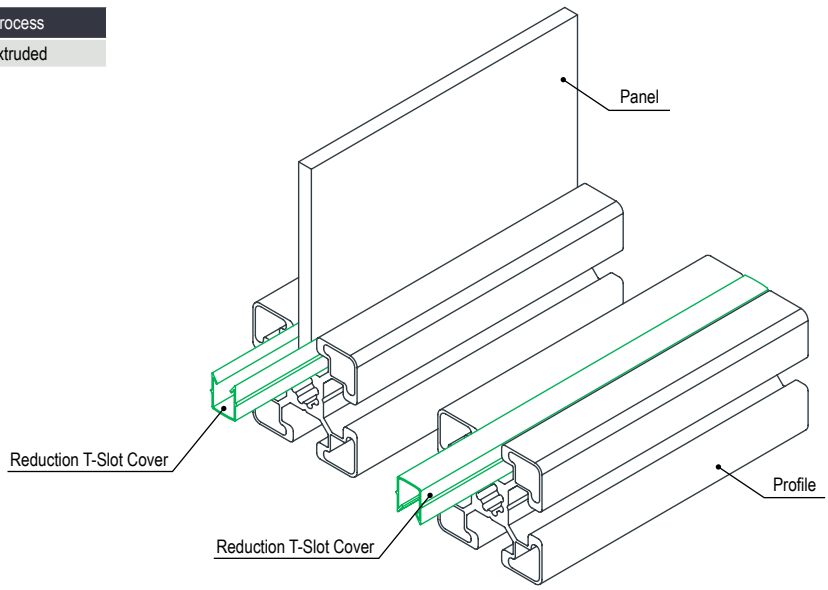

80/20 BUILD YOUR IDEA
More on 80/20® products available at 8020.net

Rubber T-slot Cover

- Installed by rolling into the T-slot

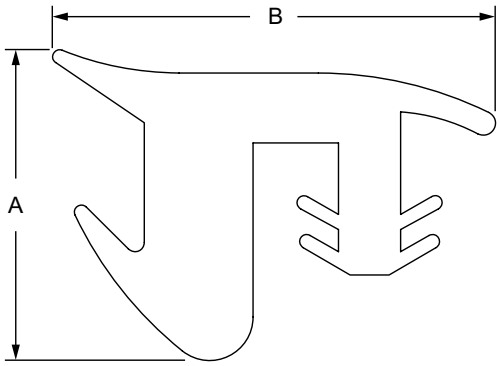

Part No.	Series	Material	Color	A	B	Length	Weight
2876	15	Rubber	Black	.400"	.570"	per foot	.042 lb / ft
2877	15			.400"	.570"	per 150 foot roll	6.315 lb
40-2876	40			10.16mm	14.48mm	per meter	.0637 kg / m
40-2877	40			10.16mm	14.48mm	per 45.7 meter roll	2.8654 kg

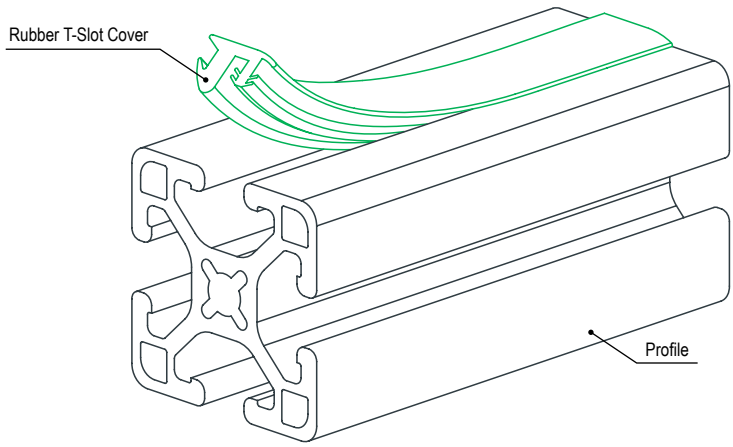

Accessories

Tread Strip

- Provides anti-slip ribbed surface
- Sold by foot or meter

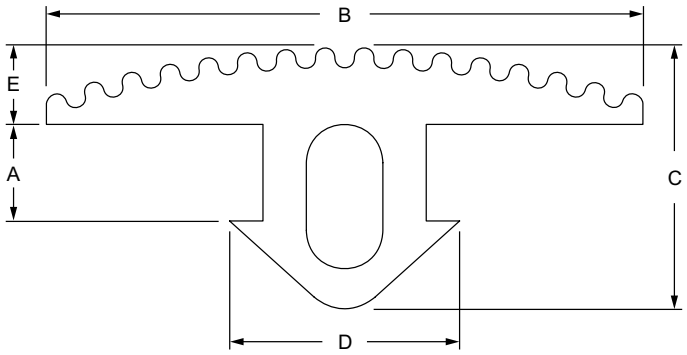

Part No.	Series	Material	Color	A	B	C	D	E	Max Single Piece Length	Weight
2828	10	TPV	Black	.110"	.875"	.398"	.375"	.150"	250 Feet	.055 lb / ft
25-2828	25			2.79mm	22.23mm	10.11mm	9.53mm	3.81mm	76.2 Meters	.0819 kg / m
12006	15 40			5.03mm	31.09mm	13.59mm	11.99mm	3.99mm	20 Meters	.1255 kg / m

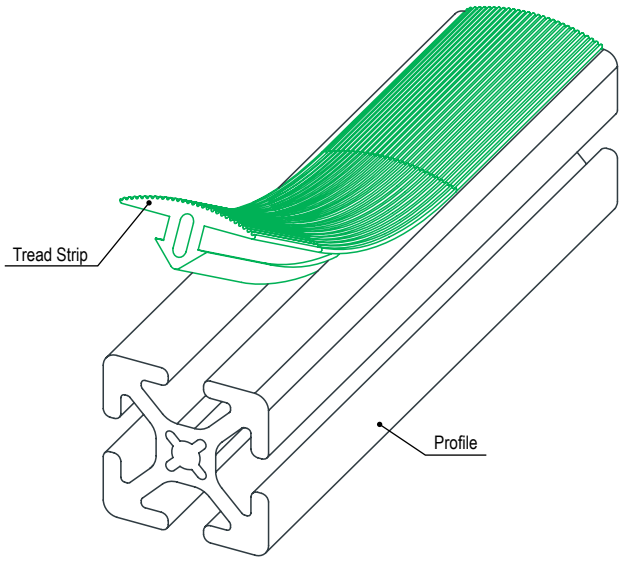

80/20 BUILD YOUR IDEA
More on 80/20® products available at 8020.net

Wire Housing / Wire Housing Cover

- Removable housing cover for easy access
- Breakaway fingers snap off for large wire groupings

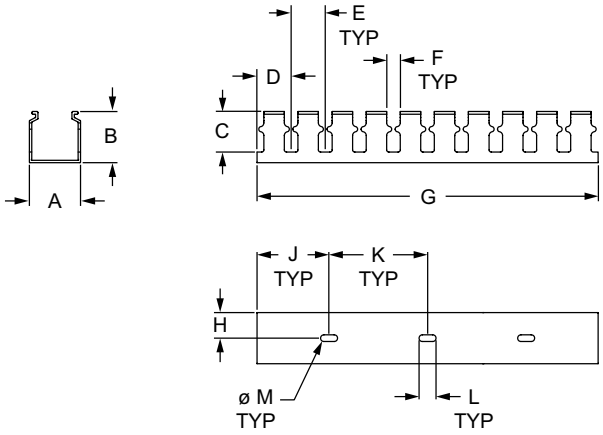

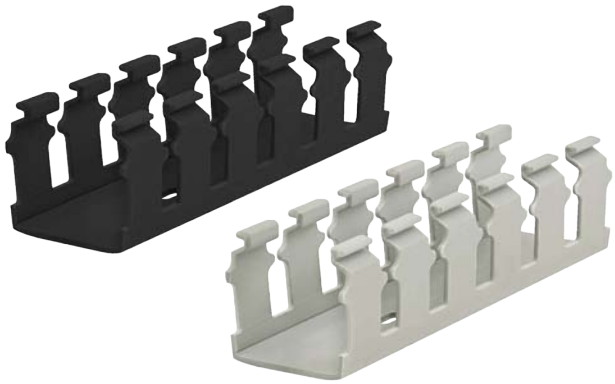

Part No.	Series	Material	Color	A	B	C	D	E	F	G	H	J	K	L	M	Weight
13197	10 15	PVC	Black	1.500"	1.502"	1.190"	1.000"	1.000"	.400"	72.000"	.750"	2.000"	4.000"	.500"	.195"	.885 lb
13199	25 30 40 45		Gray	1.500"	1.502"	1.190"	1.000"	1.000"	.400"	72.000"	.750"	2.000"	4.000"	.500"	.195"	.885 lb

Suggested Hardware (Mount to T-Slot)

Series	Part No.	Qty.*	Bolt	Part No.	Qty.*	T-Nut
10	3042	1	10-32 x .375" BHSCS	3205	1	Slide-in
15	3050	1	10-32 x .500" BHSCS	3201	1	Slide-in
25	11-5310	1	M5 x 10mm BHSCS	25-1954	1	Slide-in
30	11-5312	1	M5 x 12mm BHSCS	13115	1	Drop-in
40	11-5312	1	M5 x 12mm BHSCS	3871	1	Slide-in
45	11-5316	1	M5 x 16mm BHSCS	13127	1	Drop-in

* Suggested hardware quantity is per hole. Stock length suggested quantity is 9, utilizing every other hole.

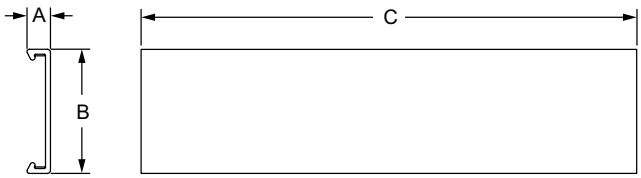

Wire Housing Cover

Part No.	Series	Material	Color	A	B	C	Weight
13198	10 15	Rigid PVD Flexible PVC	Black	.283"	1.500"	72.000"	.385 lb
13200	25 30 40 45		Gray	.283"	1.500"	72.000"	.385 lb

Accessories

Wiring Duct

- Includes overlapping fingers that interlock for end-to-end attachment

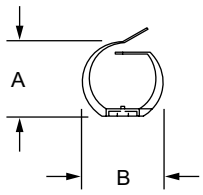

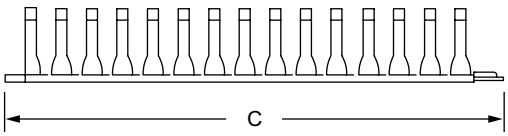

Part No.	Series	Material	Finish	Process	Color	A	B	C	Weight
2899	10 15	Plastic	Matte	Molded	Medium Gray	1.370"	1.320"	20.500"	.136 lb
65-2899	25 30 40 45					34.80mm	33.53mm	520.70mm	.0615 kg

Suggested Hardware (Mount to T-Slot)

Part No.	Series	Qty.	Bolt	T-Nut
3426	10	4	10-32 x .375" BHSCS	Slide-In
3487	15	4	10-32 x .500" BHSCS	Slide-In
11-5310	25	4	M5 x 10mm BHSCS	—
25-1954	25	4	—	Slide-In
11-5312	30	4	M5 x 12mm BHSCS	—
13115	30	4	—	Drop-In
75-3539	40	4	M5 x 12mm BHSCS	Slide-In
11-5316	45	4	M5 x 16mm BHSCS	—
13127	45	4	—	Drop-In

80/20 BUILD YOUR IDEA
More on 80/20® products available at 8020.net

Cable Tie Mounting Pad / Cable Tie

- Available with self-adhesive backing
- Sold in packs of 100

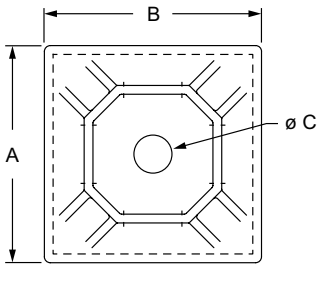

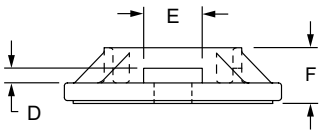

Part No.	Series	Material	Finish	Process	Color	A	B	C	D	E	F	Weight
2893*	10 15 20 25 30 40 45	Nylon	Matte	Molded	Black	.740"	.740"	.130"	.050"	.200"	.190"	.002 lb
2894*	10 15 25 30 40 45					.990"	.990"	.215"	.060"	.200"	.200"	.003 lb

* Includes a self-adhesive backing.

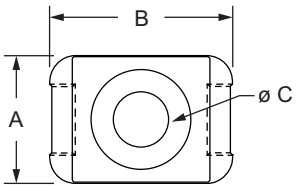

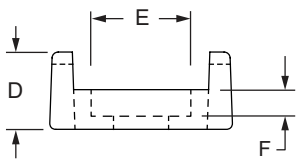

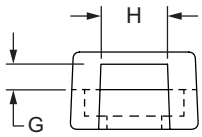

Part No.	Series	Material	Finish	Process	Color	A	B	C	D	E	F	G	H	Weight
2895	10 15 25 30 40 45	Nylon	Matte	Molded	Black	.628"	.898"	.270"	.380"	.490"	.130"	.125"	.328"	.003 lb

Suggested Hardware (Mount to T-Slot)

Series	Part No.	Qty.	Bolt	Part No.	Qty.	T-Nut
10 25	3059	1	1/4-20 x 3/8" BHSCS	3382	1	Slide-In Economy
15	3061	1	1/4-20 x 1/2" BHSCS	3382	1	Slide-In Economy
30	11-6310	1	M6 x 10mm BHSCS	13117	1	M6 Drop-In
40	11-6310	1	M6 x 10mm BHSCS	13119	1	M6 Drop-In
45	11-6314	1	M6 x 14mm BHSCS	13129	1	M6 Drop-In

Cable Tie

Part No.	Material	Finish	Process	Color	Length	Weight
2890	Nylon	Matte	Molded	Black	6.000"	.001 lb
2891					8.000"	.001 lb
2892					11.000"	.004 lb

Accessories

Drop-In Cable & Tube Clip

- Reusable to reposition; add or remove cables or wires
- Clip twists into the T-slot to lock in place

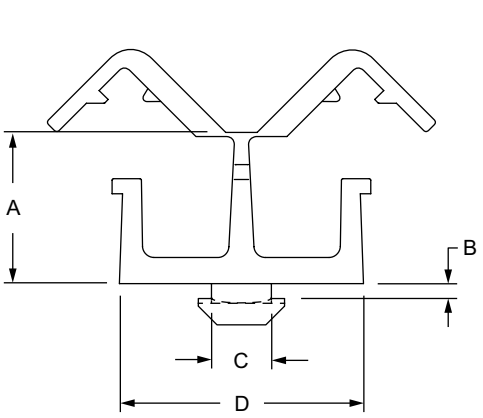

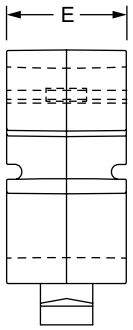

Part No.	Series	Material	Grade	Finish	Process	Color	A	B	C	D	E	Weight
12321	30	Nylon	PA6 GF30	Matte	Molded	Black	20.20mm	2.00mm	8.00mm	32.33mm	16.00mm	.0066 kg
12319	15 40						20.20mm	4.50mm	8.00mm	32.33mm	16.00mm	.0077 kg
12320	45						20.20mm	8.00mm	10.00mm	32.33mm	16.00mm	.0064 kg

Cable & Tube Clip

- Reusable to reposition; add or remove cables or wires
- Mounts to T-slot with suggested hardware

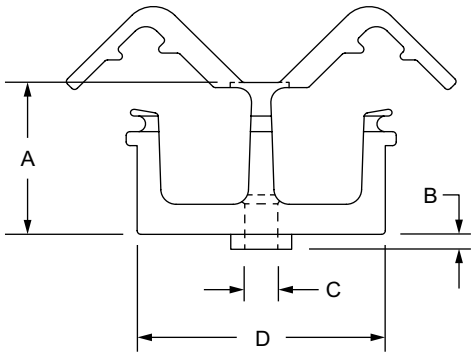

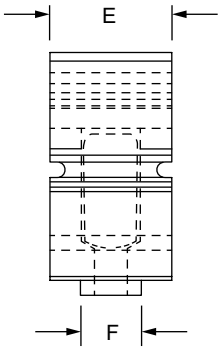

Part No.	Series	Material	Grade	Finish	Process	Color	A	B	C	D	E	F	Weight
12026	15 30 40	Nylon	PA6 GF30	Matte	Molded	Black	20.20mm	2.00mm	4.30mm	32.60mm	16.00mm	8.00mm	.0100 kg
12027	45						20.20mm	2.00mm	4.30mm	32.60mm	16.00mm	10.00mm	.0077 kg

Suggested Hardware (Mount to T-Slot)

Part No.	Series	Qty.	Bolt	T-Nut
11-4512*	15 30 40	1	M4 x 12mm SHCS	—
13113*		1	—	Drop-In
75-3563	45	1	M4 x 12mm SHCS	Drop-In

*15, 30, and 40 series suggested hardware includes both part number 11-4512 & 13113.

80/20 BUILD YOUR IDEA
More on 80/20® products available at 8020.net

Cable Tie Mounting Block

- Reusable; cable ties attach in two directions
- Block twists into the T-slot to lock in place

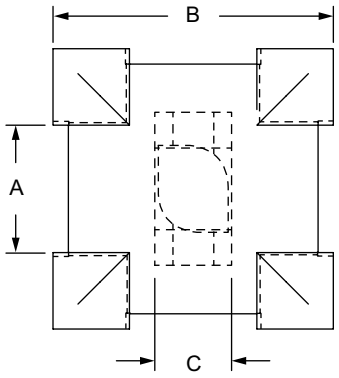

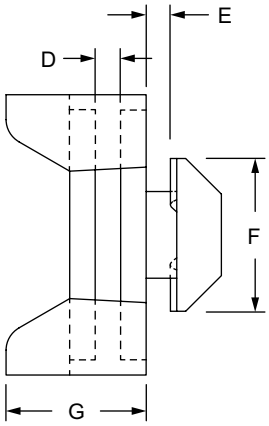

Part No.	Series	Material	Grade	Finish	Process	Color	A	B	C	D	E	F	G	Weight
12314	10 25	Nylon	PA6 GF30	Matte	Molded	Black	10.00mm	22.00mm	6.00mm	2.00mm	1.90mm	12.00mm	11.00mm	.0036 kg
12317	30						10.00mm	22.00mm	7.00mm	2.00mm	2.54mm	14.00mm	11.00mm	.0036 kg
12316	15 40						10.00mm	22.00mm	7.00mm	2.00mm	4.29mm	16.00mm	11.00mm	.0045 kg
12315	45						10.00mm	22.00mm	10.00mm	2.00mm	5.80mm	18.00mm	11.00mm	.0044 kg

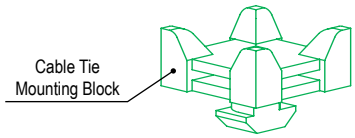

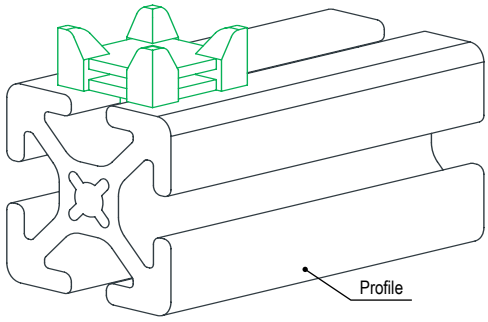

Accessories

Single Cable & Tube Clamp

- Stackable design to add more
- Mounts to T-slot with suggested hardware

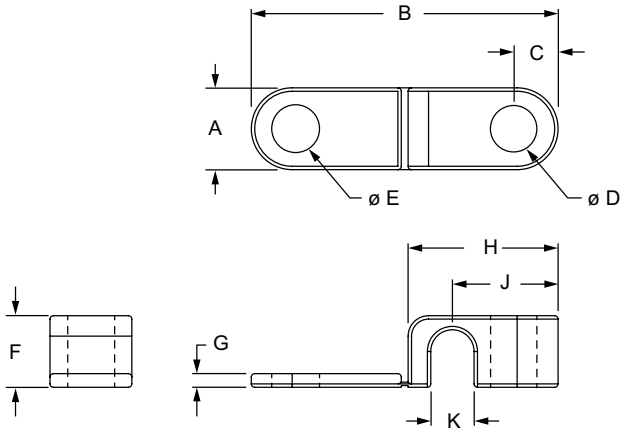

Part No.	Series	Material	Finish	Process	A	B	C	D	E	F	G	H	J	K	Weight
2500	10 15	Polypropylene	Black Matte	Molded	.472"	1.772"	.256"	.268"	.276"	.413"	.079"	.866"	.610"	.126"	.004 lb
2501	10 15				.472"	1.772"	.256"	.268"	.276"	.413"	.079"	.866"	.610"	.250"	.003 lb
2502	10 15				.630"	2.165"	.276"	.268"	.276"	.591"	.079"	1.063"	.709"	.374"	.007 lb
2503	10 15				.787"	2.717"	.276"	.268"	.276"	.886"	.079"	1.339"	.866"	.500"	.015 lb
2504	10 15				.787"	3.346"	.276"	.268"	.276"	1.181"	.079"	1.654"	1.024"	.748"	.022 lb
2505	10 15				.787"	3.346"	.276"	.268"	.276"	1.181"	.079"	1.654"	1.024"	1.000"	.021 lb
65-2500	25 40				12.00mm	45.00mm	6.50mm	6.80mm	7.00mm	10.50mm	2.00mm	22.00mm	15.50mm	3.20mm	.0017 kg
65-2501	25 40				12.00mm	45.00mm	6.50mm	6.80mm	7.00mm	10.50mm	2.00mm	22.00mm	15.50mm	6.35mm	.0015 kg
65-2502	25 40				16.00mm	55.00mm	7.00mm	6.80mm	7.00mm	15.00mm	2.00mm	27.00mm	18.00mm	9.50mm	.0033 kg
65-2503	25 40				20.00mm	69.00mm	7.00mm	6.80mm	7.00mm	22.50mm	2.00mm	34.00mm	22.00mm	12.70mm	.0068 kg
65-2504	25 40				20.00mm	85.00mm	7.00mm	6.80mm	7.00mm	30.00mm	2.00mm	42.00mm	26.00mm	19.00mm	.0099 kg
65-2505	25 40				20.00mm	85.00mm	7.00mm	6.80mm	7.00mm	30.00mm	2.00mm	42.00mm	26.00mm	25.40mm	.0091 kg

Suggested Hardware (Mount to T-Slot)

Part No.	Bolt Assy.	Qty.	Bolt	T-Nut
2500	3304	1	1/4-20 x 3/4" SHCS	Economy
2501	3304	1	1/4-20 x 3/4" SHCS	
2502	3306	1	1/4-20 x 1.0" SHCS	
2503	3307	1	1/4-20 x 1.25" SHCS	
2504	3308	1	1/4-20 x 1.50" SHCS	
2505	3308	1	1/4-20 x 1.50" SHCS	
65-2500	75-3414	1	M6 x 20mm SHCS	
65-2501	75-3415	1	M6 x 25mm SHCS	
65-2502	75-3415	1	M6 x 25mm SHCS	
65-2503	75-3416	1	M6 x 30mm SHCS	
65-2504	75-3418	1	M6 x 40mm SHCS	
65-2505	75-3418	1	M6 x 40mm SHCS	

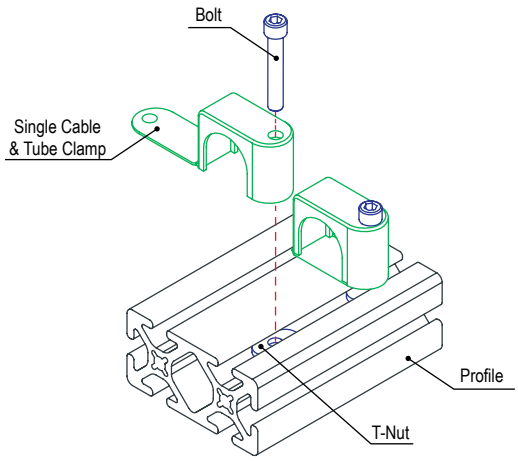

80/20 BUILD YOUR IDEA
More on 80/20® products available at 8020.net

Double Cable & Tube Clamp

- Stackable design to add more
- Mounts to T-slot with suggested hardware

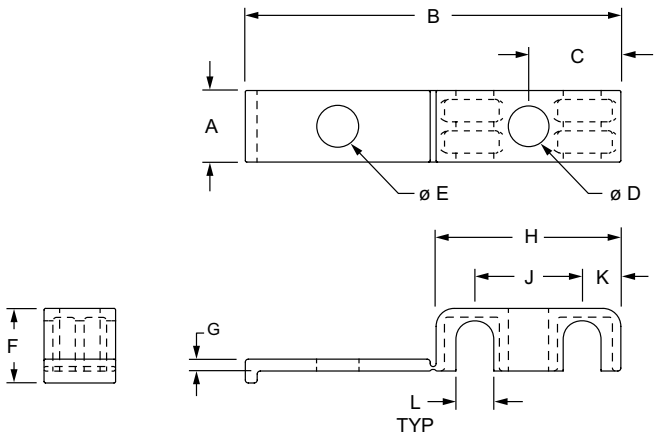

Part No.	Series	Material	Finish	Process	A	B	C	D	E	F	G	H	J	K	L	Weight
2506	10 15	Polypropylene	Black Matte	Molded	.472"	2.480"	.610"	.268"	.276"	.413"	.079"	1.220"	.709"	.256"	.126"	.005 lb
2507	10 15				.472"	2.480"	.610"	.268"	.276"	.413"	.079"	1.220"	.709"	.256"	.250"	.005 lb
2508	10 15				.630"	3.110"	.768"	.268"	.276"	.591"	.079"	1.535"	.866"	.335"	.374"	.009 lb
2509	10 15				.787"	4.213"	1.043"	.268"	.276"	.886"	.079"	2.087"	1.181"	.453"	.500"	.022 lb
2510	10 15				.787"	5.551"	1.378"	.268"	.276"	1.181"	.079"	2.756"	1.496"	.630"	.748"	.034 lb
2511	10 15				.787"	5.551"	1.378"	.268"	.276"	1.181"	.079"	2.756"	1.496"	.630"	1.000"	.026 lb
65-2506	25 40				12.00mm	63.00mm	15.50mm	6.80mm	7.00mm	10.50mm	2.00mm	31.00mm	18.00mm	6.50mm	3.20mm	.0024 kg
65-2507	25 40				12.00mm	63.00mm	15.50mm	6.80mm	7.00mm	10.50mm	2.00mm	31.00mm	18.00mm	6.50mm	6.35mm	.0023 kg
65-2508	25 40				16.00mm	79.00mm	19.50mm	6.80mm	7.00mm	15.00mm	2.00mm	39.00mm	22.00mm	8.50mm	9.50mm	.0043 kg
65-2509	25 40				20.00mm	107.00mm	26.50mm	6.80mm	7.00mm	22.50mm	2.00mm	53.00mm	30.00mm	11.50mm	12.70mm	.0099 kg
65-2510	25 40				20.00mm	141.00mm	35.00mm	6.80mm	7.00mm	30.00mm	2.00mm	70.00mm	38.00mm	16.00mm	19.00mm	.0154 kg
65-2511	25 40				20.00mm	141.00mm	35.00mm	6.80mm	7.00mm	30.00mm	2.00mm	70.00mm	38.00mm	16.00mm	25.40mm	.0117 kg

Suggested Hardware (Mount to T-Slot)

Part No.	Bolt Assy.	Qty.	Bolt	T-Nut
2506	3304	1	1/4-20 x 3/4" SHCS	Economy
2507	3305	1	1/4-20 x 7/8" SHCS	
2508	3306	1	1/4-20 x 1.0" SHCS	
2509	3307	1	1/4-20 x 1.25" SHCS	
2510	3308	1	1/4-20 x 1.50" SHCS	
2511	3308	1	1/4-20 x 1.50" SHCS	
65-2506	75-3414	1	M6 x 20mm SHCS	
65-2507	75-3414	1	M6 x 20mm SHCS	
65-2508	75-3415	1	M6 x 25mm SHCS	
65-2509	75-3416	1	M6 x 30mm SHCS	
65-2510	75-3418	1	M6 x 40mm SHCS	
65-2511	75-3418	1	M6 x 40mm SHCS	

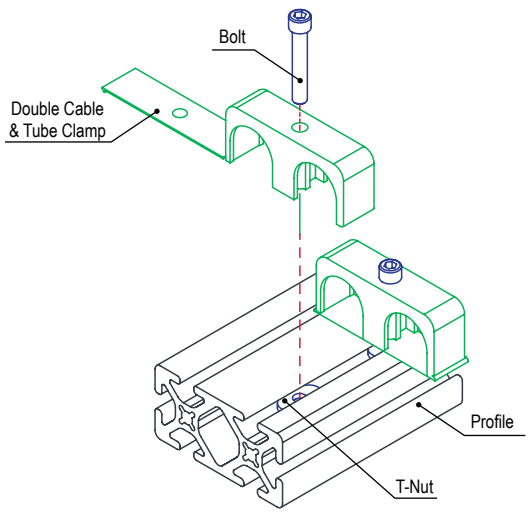

Accessories

Power Strip

- Illuminated power switch with safety cover
- Mounting clips included; recommend hardware (sold separately)
- Resettable circuit breaker

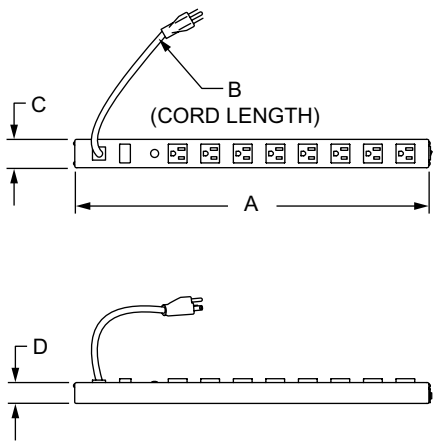

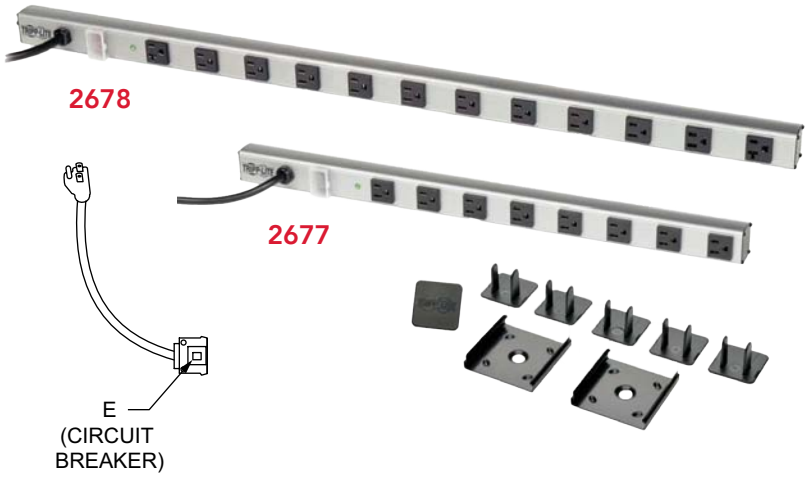

Part No.	Series	A	B	C	D	E	Rated	Outlets	Plug	Weight
2677	10 15 25	24.000"	6 ft	1.620"	1.250"	15 amp	1800W, 120V, 15A	8	NEMA 5-15R	2.400 lb
2678	30 40 45	36.000"	15 ft	1.620"	1.250"	20 amp	2400W, 120 V, 20A	12	NEMA 5-20P	4.850 lb

Suggested Hardware (Mount to T-Slot)

Series	Bolt	Qty.	T-Nut	Qty.
10 25	11-5708	2	25-1951	2
30	11-5710		13115	
15 40	11-5712		3930	
45	11-5712		13127	

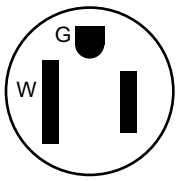

15 Amp
NEMA 5-15R Plug

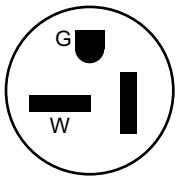

20 Amp
NEMA 5-20P Plug

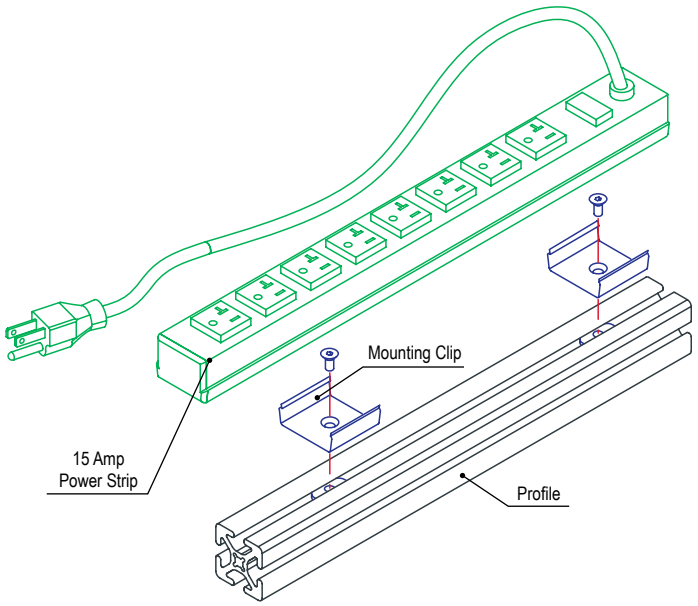

80/20 BUILD YOUR IDEA
More on 80/20® products available at 8020.net

Anodize Breaker

- Penetrates anodize to provide grounded application
- Twists into T-slot; tilts at a 45 degree angle
- Requires 3mm ball end wrench (11-2)

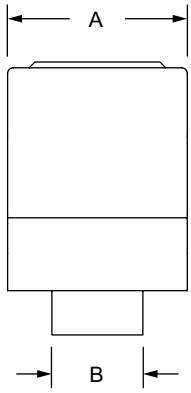

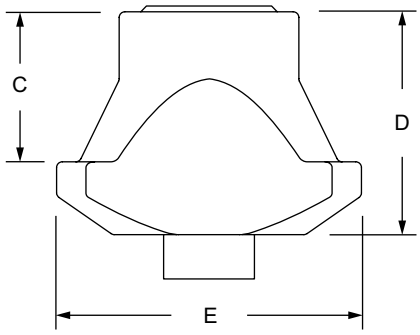

Part No.	Series	Material	Grade	Finish	A	B	C	D	E	Weight
12328	15 40	Steel	C35	Bright Zinc	.311"	.157"	.260"	.386"	.528"	.009 lb

Grounding Terminal

- Creates conductive electrical connection to T-slot profile
- All hardware is included
- M6 thread rod requires 3mm ball end wrench (11-2) to adjust

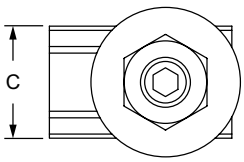

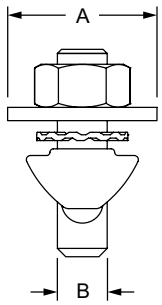

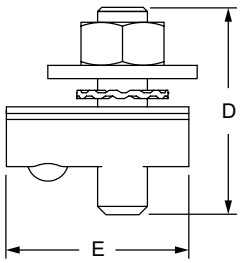

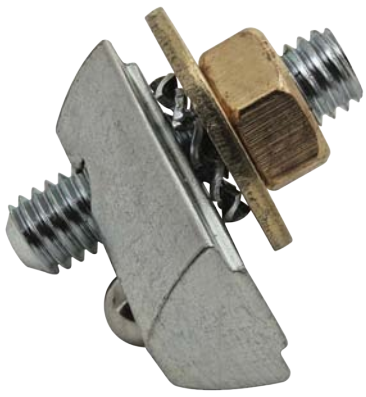

Part No.	Series	Material	Finish	Process	A	B	C	D	E	Weight
12300	15 40	Steel / Brass	Bright Zinc	Assembled	.709"	.236"	.531"	.984"	.866"	.041 lb

Accessories

Storage Bin

- Requires storage bin hanger (sold separately)
- Custom length hanger, see hanger profile (9-19)

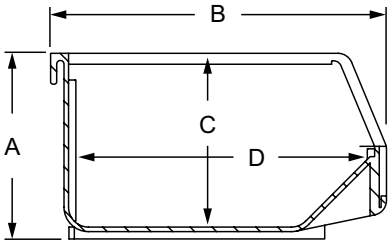

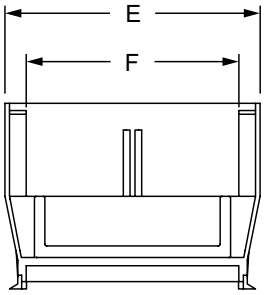

Blue Bin	Series	Material	Finish	Process	A	B	C	D	E	F	Weight
2230-BLU	10 15 25 40	Plastic	Gloss	Molded	3.000" 76.20mm	5.375" 136.53mm	2.813" 71.45mm	4.750" 120.65mm	4.125" 104.78mm	3.438" 87.33mm	.156 lb .0708 kg
2240-BLU	10 15 25 40				3.000" 76.20mm	7.375" 187.33mm	2.813" 71.45mm	6.711" 170.45mm	4.125" 104.78mm	3.438" 87.33mm	.232 lb .1030 kg
2250-BLU	10 15 25 40				5.000" 127.00mm	10.875" 276.23mm	4.750" 120.65mm	10.250" 260.35mm	5.500" 139.70mm	4.375" 111.13mm	.644 lb .2083 kg
2270-BLU	10 15 25 40				5.000" 127.00mm	10.875" 276.23mm	4.750" 120.65mm	10.250" 260.35mm	11.000" 279.40mm	10.000" 254.00mm	.984 lb .4327 kg

Storage Bin Hanger

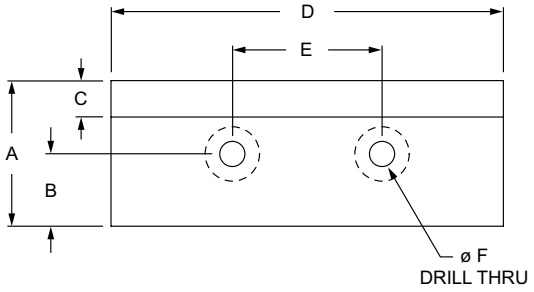

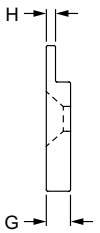

Part No.	Series	Material	Alloy	Process	Finish	A	B	C	D	E	F	G	H	Weight
2264	10 15	Aluminum	6005A-T61	Machined	Clear Anodize	1.500"	.745"	.375"	6.000"	3.500"	1/4-20	.250"	.100"	.236 lb
2264-Black	10 15				Black Anodize	1.500"	.745"	.375"	6.000"	3.500"	1/4-20	.250"	.100"	.236 lb
2265	10 15				Clear Anodize	1.500"	.745"	.375"	12.000"	4.000"	1/4-20	.250"	.100"	.444 lb
2265-Black	10 15				Black Anodize	1.500"	.745"	.375"	12.000"	4.000"	1/4-20	.250"	.100"	.444 lb
65-2264	25 30 40 45				Clear Anodize	38.10mm	18.92mm	9.53mm	160.00mm	88.90mm	M6	6.35mm	2.54mm	.1081 kg
65-2264-Black	25 30 40 45				Black Anodize	38.10mm	18.92mm	9.53mm	160.00mm	88.90mm	M6	6.35mm	2.54mm	.1081 kg
65-2265	25 30 40 45				Clear Anodize	38.10mm	18.92mm	9.53mm	320.00mm	101.60mm	M6	6.35mm	2.54mm	.2083 kg
65-2265-Black	25 30 40 45				Black Anodize	38.10mm	18.92mm	9.53mm	320.00mm	101.60mm	M6	6.35mm	2.54mm	.2083 kg

Included Hardware (Mount to T-Slot)

Part No.	Bolt	Qty.	Bolt	Qty.	T-Nut	Qty.
2264	3400	2	3405	2	3382	2
2264-Black	3400	2	3405	2	3382	2
65-2264	13-6712	2	13-6716	2	3859	2
65-2264-Black	13-6712	2	13-6716	2	3859	2

For parts 2265, 2265-Black, 65-2265, and 65-2265-Black the included quantity is 3.

80/20 BUILD YOUR IDEA
More on 80/20® products available at 8020.net

Heavy-Duty Adjustable Monitor Mount

- Compatible with the Video Electronics Standards Association (VESA) mounting patterns of 75x75, 100x100, 200x100, or 200x200; includes most displays up to 42”
- Adjusts in three dimensions; rotates 360 degrees; tilts 15 degrees; swivels ± 90 degrees; extends out from 3.50 inches (88.9mm) to 18.00 inches (457.2mm): weight capacity is 44 pounds (20 kg)

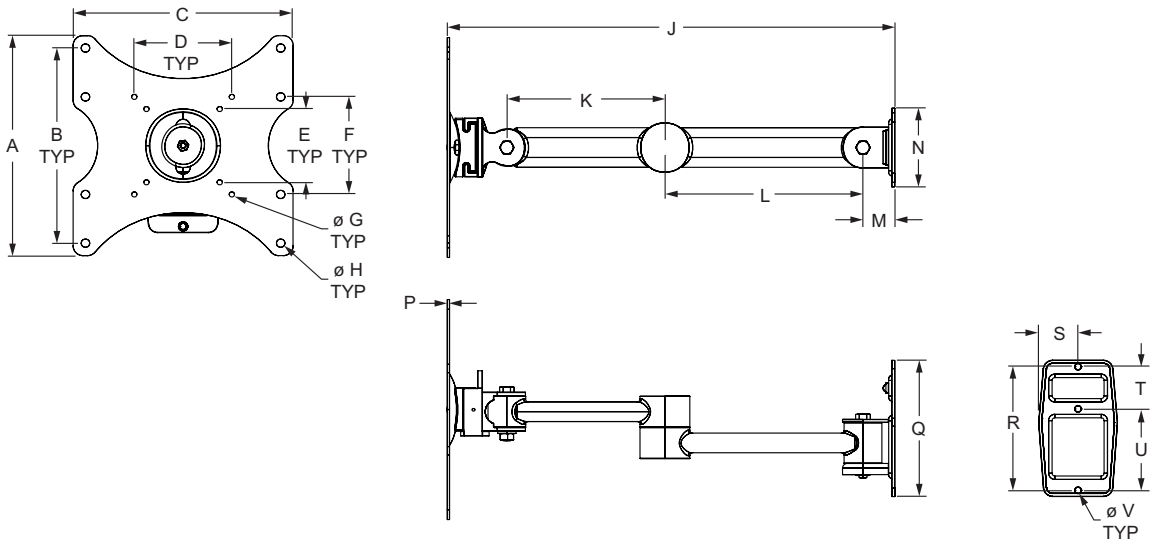

Part No.	Series	Material	Finish	Color	A	B	C	D	Weight
2288	15 40 45	Steel	Powder Coat	Black	8.875” (225.43mm)	7.874" (200.00mm)	8.875" (225.43mm)	3.937" (100.00mm)	5.215 lb (2.3655 kg)
	E	F	G	H	J	K	L	M	
	2.953" (75.01mm)	3.937" (100.00mm)	.207" (5.26mm)	.334" (8.48mm)	18.056" (458.62mm)	6.378" (162.00mm)	7.992" (203.00mm)	1.285" (32.64mm)	
	N	P	Q	R	S	T	U	V	
	3.175" (80.65mm)	.085” (2.16mm)	5.552" (141.02mm)	4.986" (126.64mm)	1.587" (40.31mm)	1.703" (43.26mm)	3.283" (83.39mm)	.252" (6.40mm)	

Suggested Hardware (Mount to T-Slot)

Series	Part No.	Qty.	Bolt	Part No.	Qty.	T-Nut
15	13-6312	3	M6 x 12mm BHSCS	3836	3	Slide-in
40	13-6312	3	M6 x 12mm BHSCS	40-1961	3	Slide-in
45	13-6316	3	M6 x 16mm BHSCS	13130	3	Drop-in

Accessories

Adjustable Monitor Mount

- Compatible with the Video Electronics Standards Association (VESA) mounting patterns of 75mm x 75mm through 100mm x 100mm; includes most displays up to 34”
- Adjusts in three dimensions; rotates 360 degrees; tilts 15 degrees; swivels ± 90 degrees; extends out from 1.75 inches (44.45mm) to 15.00 inches (381mm): weight capacity is 33 pounds (14.97 kg)

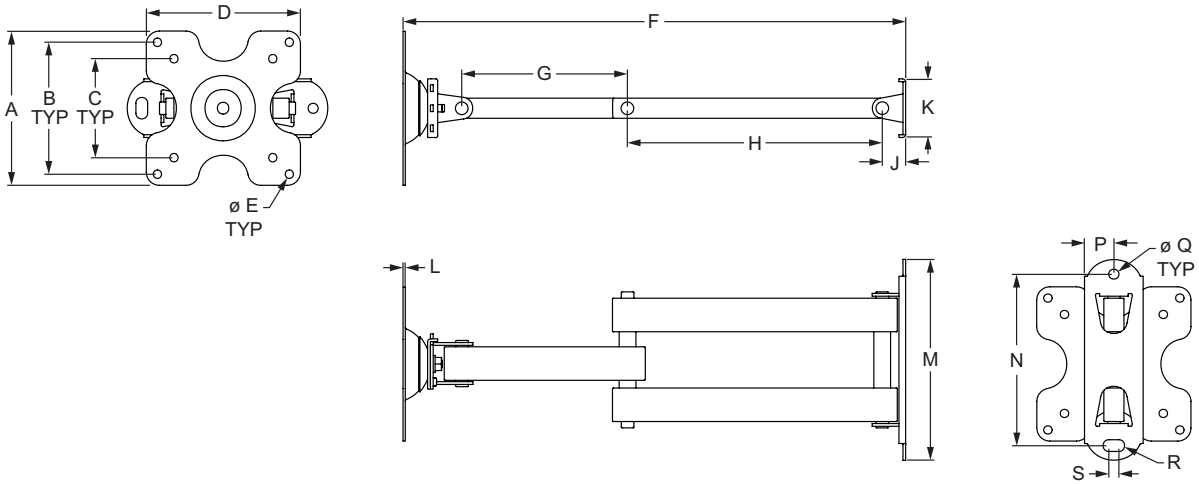

Part No.	Series	Material	Color	A	B	C	D
2289	15 30 40 45	Steel	Black	4.600" (116.84mm)	3.937" (100.00mm)	2.953" (75.00mm)	4.600" (116.84mm)
	E	F	G	H	J	K	L
	.250" (6.35mm)	15.000" (381.00mm)	4.940" (125.48mm)	7.600" (193.04mm)	.688" (17.48mm)	1.750" (44.45mm)	.066" (1.68mm)
	M	N	P	Q	R	S	Weight
	6.000" (152.40mm)	5.116" (129.95mm)	.875" (22.22mm)	.328" (8.33mm)	.164" (4.17mm)	.232" (5.89mm)	2.363 lb (1.0718 kg)

Suggested Hardware (Mount to T-Slot)

Series	Part No.	Qty.	Bolt Assembly	T-Nut
15	3319	2	5/16-18 x .500” FBHSCS	Economy
40	75-3421	2	M8 x 12mm BHSCS	

Series	Part No.	Qty.	Bolt	Part No.	Qty.	T-Nut	Part No.	Qty.	Washer
30	13-8312	2	M8 x 12mm BHSCS	30-3796	2	Economy	13-6042	2	M8 Flat Washer
45	13-8312	2	M8 x 12mm BHSCS	13132	2	M8 Hammer Nut	-	-	-

80/20 BUILD YOUR IDEA
More on 80/20® products available at 8020.net

Workstation Arm

- Monitor mounting compatible with the Video Electronics Standards Association (VESA) MIS-D mounting patterns of 75mm and 100mm; holds monitors between 4.40 to 17.64 pounds (2.0 to 8.0 kg); adjustable viewing angle and height; hardware to mount to T-slot included
- Rotates 360 degree mounting flange with 1.575” (40.00mm) spacing between holes
- Fold up keyboard holder for weights up to 5.50 pounds (2.5 kg) with left or right pull out shelf for mouse

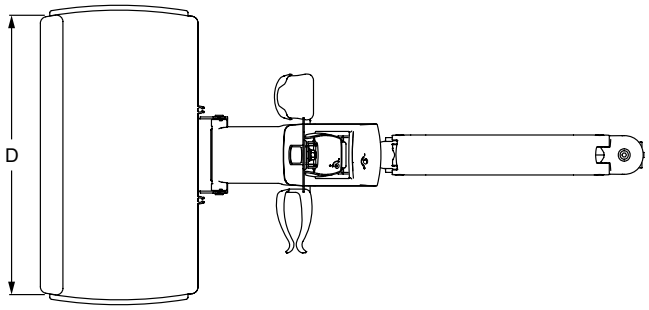

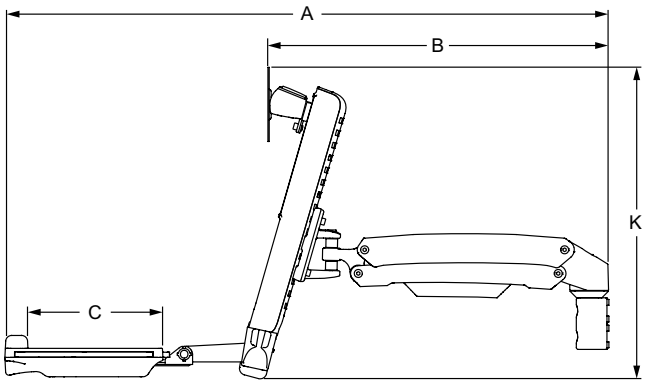

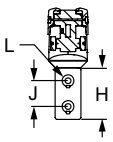

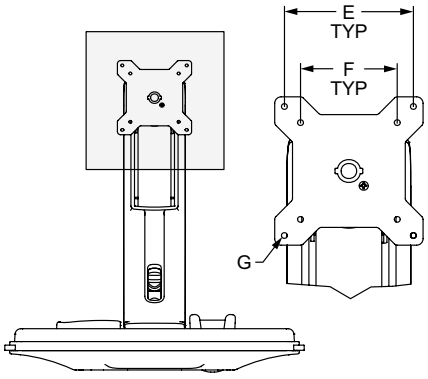

Part No.	Series	Material	Color	A	B	C	D	E
2370	15 40 45	Steel & Aluminum	Gray	36.847" (935.91mm)	20.791" (528.09mm)	8.213" (208.61mm)	17.070" (433.58mm)	3.937" (100.00mm)
	F	G	H	J	K	L	Weight	
	2.953" (75.01mm)	.089" (2.261mm)	3.153" (80.07mm)	1.575" (40.01mm)	19.000" (482.60mm)	.350" (8.89mm)	22.000 lb (9.979 kg)	

Included Hardware (Mount to T-Slot)

Series	Bolt	Qty.	T-nut & Washer	Qty.
15 40	M8 x 45mm SHCS	2	Slide-in T-nut & Washer for 8mm slot	2
45	M8 x 50mm SHCS	2	Slide-in T-nut & Washer for 10mm slot	2

See the workstation arm in action. Scan the QR code to see a demonstration

Accessories

Hand Crank Lift System

- Included in kit: hydraulic pump with hand crank (1), linear leg units (4), rubber leveling feet (4), mounting brackets (8), M5 x 8mm bolts (16)
- Kit ships in one box weighing 29 lbs and measuring 35” x 12” x 9” in size

See the lift system in action. Scan the QR code to see a demonstration

Material Specifications

- Works with 15, 30, 40, 45 series profiles
- Made up of primarily aluminum, plastic and stainless steel
- Max load: 450 kg (992 lbs) – includes weight of frame
- Max stroke: 300mm (11.811”)
- Lifting speed: 5mm (.197”) per hand crank turn
- Retracted height of legs: 445mm (17.520”)
- Extended height of legs: 745mm (29.331”)

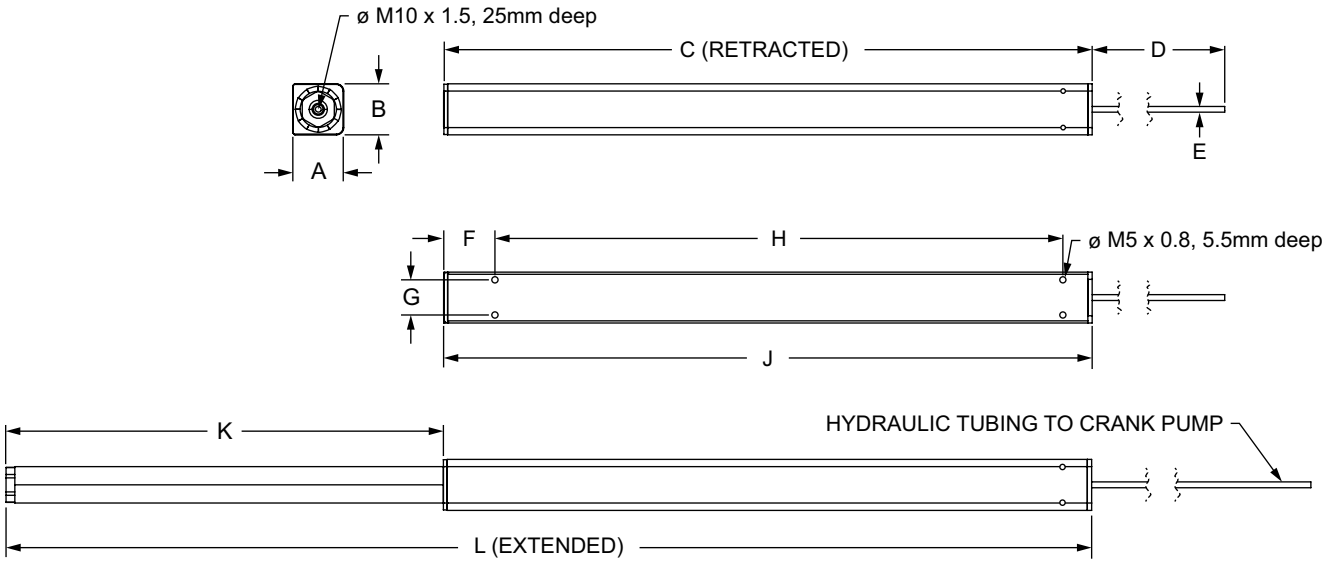

Linear Leg Unit

Part No.	Series	Material	Color	A	B	C	D	E	F	G	H	J	K	L
2371	15 30 40 45	Aluminum & Steel	Gray	1.347" (34.21mm)	1.378" (35.00mm)	17.521" (445.03mm)	118.000" (2997.20mm)	.157" (4.00mm)	1.379" (35.03mm)	.945" (24.00mm)	15.354" (389.99mm)	17.521" (445.03mm)	11.822" (300.28mm)	29.343" (745.31mm)

80/20 BUILD YOUR IDEA
More on 80/20® products available at 8020.net

Hand Crank Lift System (Continued)

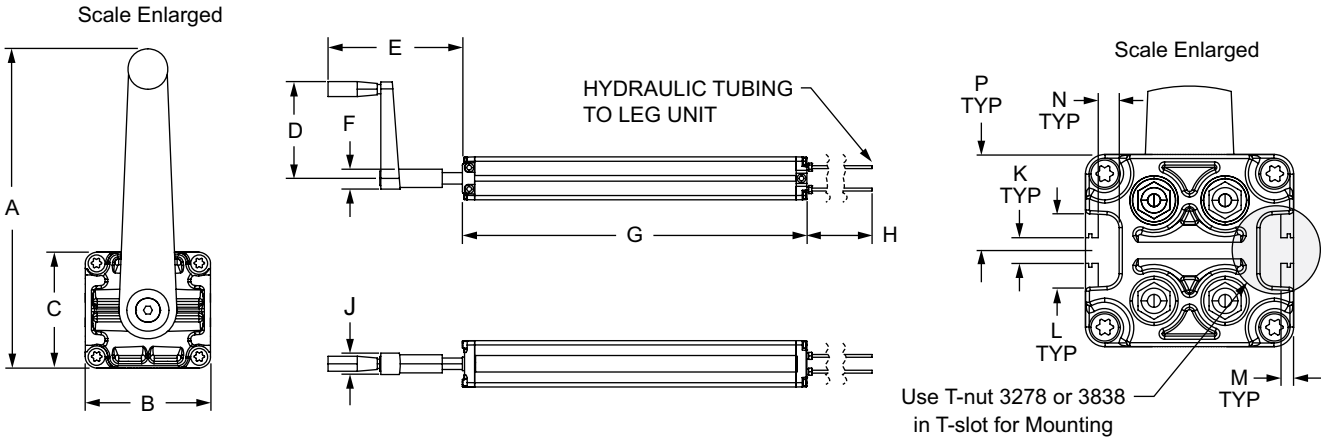

Hydraulic Pump with Hand Crank

Part No.	Material	Color	A	B	C	D	E	F
2371	Aluminum & Plastic	Gray	6.509" (165.33mm)	2.559" (64.99mm)	2.355" (59.82mm)	5.335" (722.94mm)	7.411" (188.24mm)	1.093" (27.76mm)
	G	H	J	K	L	M	N	P
	18.996" (465.40mm)	118.142" (3000.81mm)	1.181" (29.99mm)	.315" (8.00mm)	.904" (22.96mm)	.157" (3.99mm)	.256" (6.50mm)	1.178" (29.91mm)

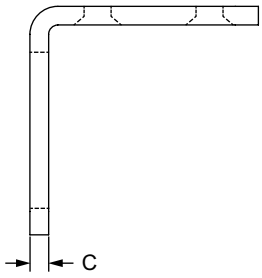

Included Hardware

Bolt	Qty.
M5 x 8mm FHSCS	16

Suggested Hardware (Mount to T-Slot)

Series	Bolt	Qty.	Washer	Qty.	T-Nut	Qty.
30	11-8312	8	11-6042	8	13094	8
15 40	11-8316	8	11-6042	8	3838	8
45	11-8316	8	11-6042	8	13062	8

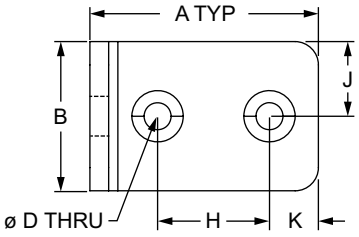

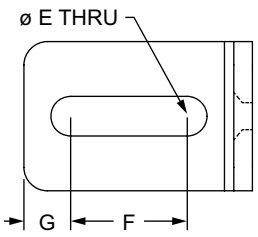

Mounting Bracket

Part No.	Material	Color	A	B	C	D	E
2371	Steel	Gray	1.929" (48.99mm)	1.260" (32.00mm)	.157" (3.99mm)	.228" (5.80mm)	.335" (8.50mm)
			F	G	H	J	K
			.984" (24.99mm)	.394" (10.00mm)	.945" (24.00mm)	.630" (16.00mm)	.413" (10.50mm)

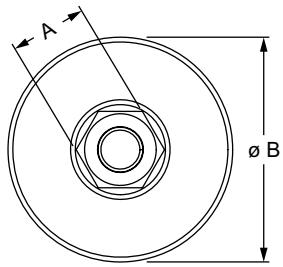

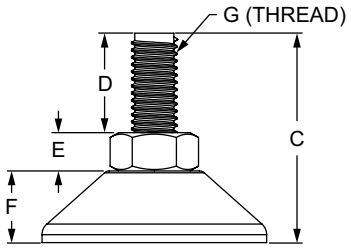

Rubber Leveling Feet

Part No.	A	B	C
2371	.630" (16.00mm)	1.850" (46.99mm)	1.725" (43.82mm)
D	E	F	G
.819" (20.80mm)	.315" (8.00mm)	.591" (15.01mm)	M10 x 28mm

Accessories

Electronic Lift System

- Included in kit: control box (1), memory control switch (1), linear leg units with 6.5’ cables (4), 9.5’ power cable (1), rubber leveling feet (4), mounting brackets (8), M5 x 8mm bolts (16)
- Kit ships in one box weighing 33 lbs and measuring 30” x 10” x 7” in size

See the lift system in action. Scan the QR code to see a demonstration

Material Specifications

- Works with 15, 30, 40, 45 series profiles
- Made up of primarily aluminum, plastic and stainless steel
- Max load: 600 kg (1320lbs) – includes weight of frame
- Max stroke: 300mm (11.811”)
- Lifting speed: 9mm per second (.354”/sec)
- Retracted Height of legs: 599mm (23.583”)
- Extended Height of legs: 899mm (35.394”)
- Includes 3 programmable height settings, and a digital readout of current height

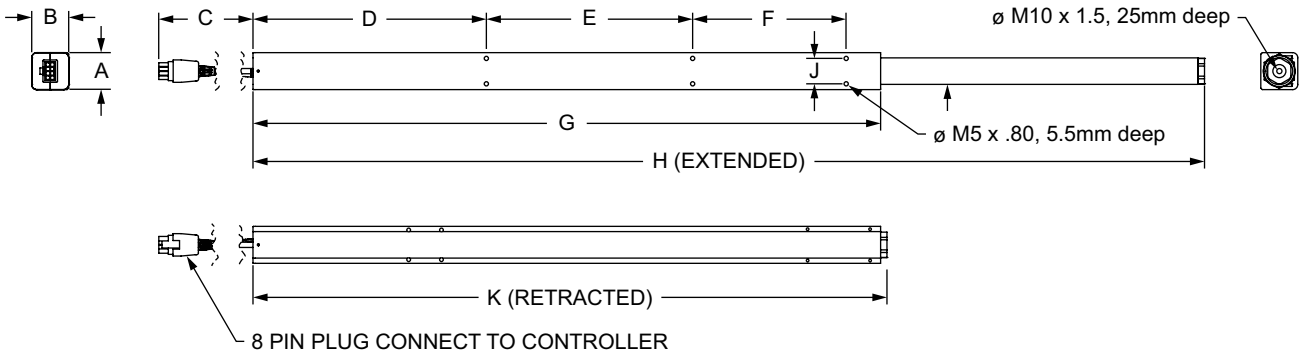

Linear Leg Unit

Part No.	Series	Material	Color	A	B	C	D	E	F	G	H	J	K
2372	15 30 40 45	Aluminum & Steel	Gray	1.362" (34.59mm)	1.378" (35.00mm)	78.00" (1981.20mm)	8.665" (220.09mm)	7.677" (194.99mm)	5.709" (145.01mm)	23.346" (592.99mm)	35.394" (899.01mm)	.945" (24.00mm)	23.583" (599.01mm)

80/20 BUILD YOUR IDEA
More on 80/20® products available at 8020.net

Electronic Lift System (Continued)

Suggested Hardware (Mount Controller or Box to T-Slot)

Series	Bolt	Qty. (Controller)	Qty. (Box)	T-Nut	Qty. (Controller)	Qty. (Box)
30	11-4310	2	3	13022	2	3
15 40	11-4312	2	3	13022	2	3
45	11-4312	2	3	13046	2	3

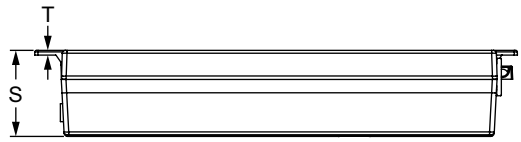

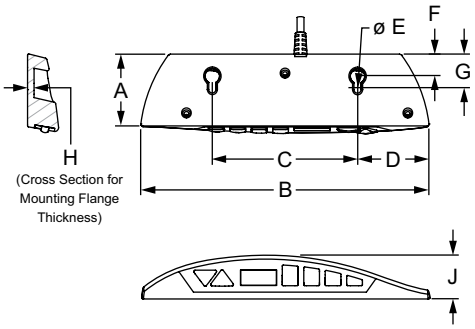

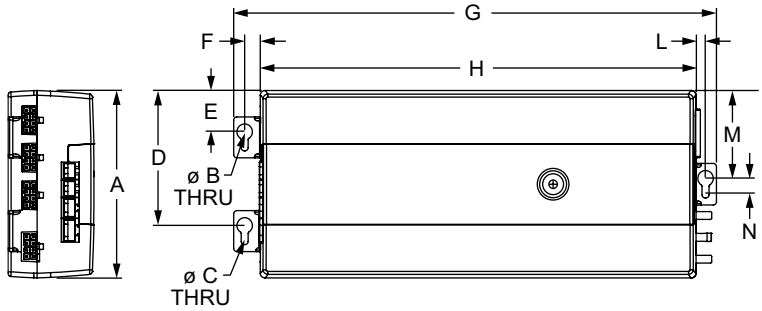

Memory Controller

Part No.	A	B	C	D
2372	1.800" (45.73mm)	6.558" (166.58mm)	3.305" (83.95mm)	1.625" (41.27mm)
E	F	G	H	J
.160" (4.06mm)	.502" (12.76mm)	.802" (20.38mm)	.146" (3.69mm)	.999" (24.48mm)

Controller Box

Part No.	A	B	C	D	E	F	G	H
2372	4.724" (119.99mm)	.394" (10.01mm)	.157" (3.99mm)	3.40" (86.36mm)	1.039" (26.39mm)	.394" (10.01mm)	12.169" (309.09mm)	10.988" (279.09mm)
	J	K	L	M	N	R	S	T
	.22" (5.59mm)	3.602" (91.49mm)	.240" (6.09mm)	2.213" (56.21mm)	.416" (10.57mm)	2.347" (59.61mm)	2.166" (55.02mm)	.118" (2.99mm)

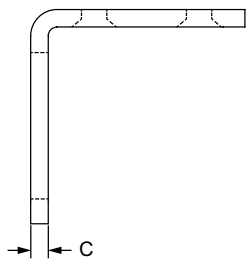

Included Hardware

Bolt	Qty.
M5 x 8mm FHSCS	16

Suggested Hardware (Mount to T-Slot)

Series	Bolt	Qty.	Washer	Qty.	T-Nut	Qty.
30	11-8312	8	11-6042	8	13094	8
15 40	11-8316	8	11-6042	8	3838	8
45	11-8316	8	11-6042	8	13062	8

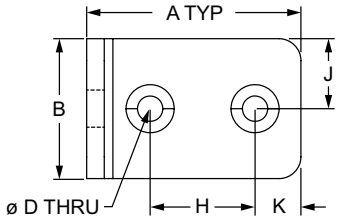

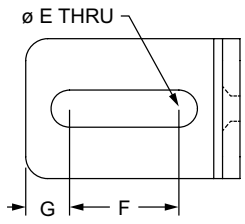

Mounting Bracket

Part No.	Material	Color	A	B	C	D	E
2372	Steel	Gray	1.929" (48.99mm)	1.260" (32.00mm)	.157" (3.99mm)	.228" (5.80mm)	.335" (8.50mm)
			F	G	H	J	K
			.984" (24.99mm)	.394" (10.00mm)	.945" (24.00mm)	.630" (16.00mm)	.413" (10.50mm)

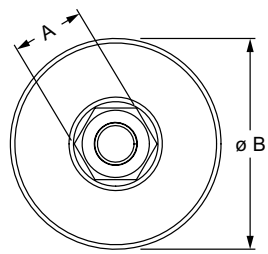

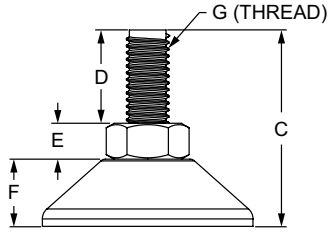

Rubber Leveling Feet

Part No.	A	B	C
2372	.630" (16.00mm)	1.850" (46.99mm)	1.725" (43.82mm)
D	E	F	G
.819" (20.80mm)	.315" (8.00mm)	.591" (15.01mm)	M10 x 1.5

Accessories

Slide-In Tool Hanger

- Slides into end of T-slot; moves with no lubrication necessary
- Weight capacity of 100 pounds (68 kg.)
- Hole works with spring hook

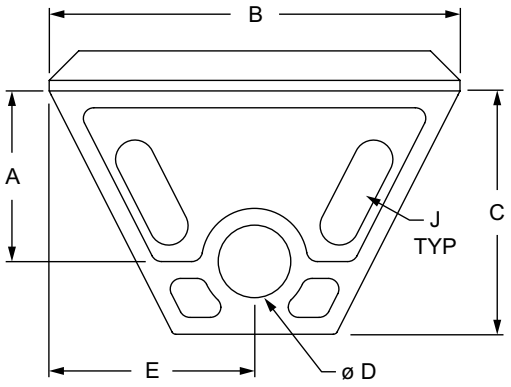

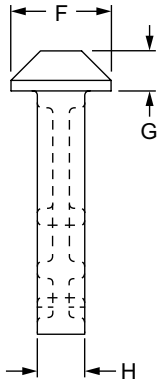

Part No.	Series	Material	Grade	Finish	Process	A	B	C	D	E	F	G	H	J	Weight
2099	10	Nylon	—	Matte	Molded	.810"	1.950"	1.156"	.344"	.975"	.475"	.190"	.225"	R .098" x .354"	.013 lb
2100	15	Nylon	—			1.250"	2.900"	1.670"	.500"	1.450"	.625"	.250"	.250"	R .098" x .472"	.030 lb
25-2099	25	Nylon	—			20.57mm	49.53mm	29.36mm	8.74mm	24.77mm	12.07mm	4.83mm	5.72mm	R 2.49mm x 8.99mm	.0060 kg
12016	30	Glass Filled Nylon	PA6 GF30			21.80mm	60.00mm	33.00mm	10.50mm	30.00mm	14.00mm	4.20mm	7.50mm	—	.0086 kg
40-2100	40	Nylon	—			31.75mm	73.66mm	42.42mm	12.70mm	36.83mm	15.88mm	6.35mm	6.35mm	R 2.49mm x 11.99mm	.0138 kg
12015	45	Glass Filled Nylon	PA6 GF30			21.80mm	60.00mm	33.00mm	10.50mm	30.00mm	18.00mm	4.20mm	7.50mm	—	.0109 kg

Slide-In Tool Hanger

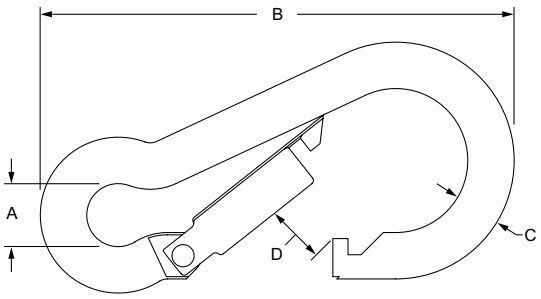

Part No.	Series	Material	Grade	Finish	Process	Breaking Capacity	A	B	C	D	Weight
2108	10 15	Steel	Mild	Galvanized	Formed	550 lb (374 kg)	.313"	2.375"	.230"	.313"	.059 lb
65-2108	25 40						7.95mm	60.33mm	5.84mm	7.95mm	.0268 kg

80/20 BUILD YOUR IDEA
More on 80/20® products available at 8020.net

Vertical Mount Hook

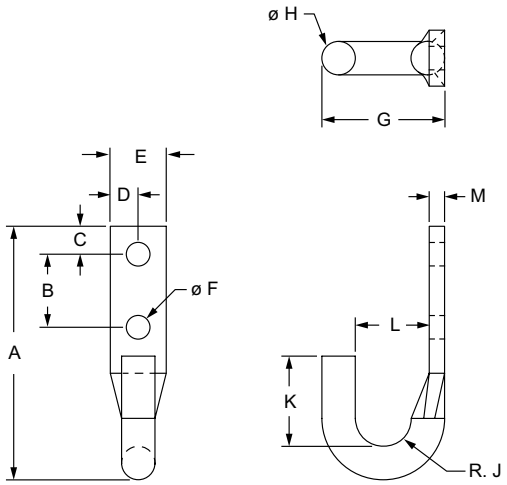

Part No.	Series	Material	A	B	C	D	E	F	G	H	J	K	L	M	Weight
14158	10 15 25 30 40 45	Steel	2.810"	.810"	.310"	.310"	.620"	.260"	1.360"	.370"	.310"	1.000"	.820"	.170"	.290 lb

Suggested Hardware (Mount to T-Slot)

Series	Part No.	Qty.	Bolt	Part No.	Qty.	T-Nut
10	3061	2	1/4-20 x .500" BHSCS	3376	2	Roll-in
15	3063	2	1/4-20 x .625" BHSCS	14165	2	Drop-in
25	11-6312	2	M6 x 12mm BHSCS	25-1966	2	Roll-in
30	11-6312	2	M6 x 12mm BHSCS	13117	2	Drop-in
40	11-6314	2	M6 x 14mm BHSCS	13119	2	Drop-in
45	11-6316	2	M6 x 16mm BHSCS	13129	2	Drop-in

Accessories

Horizontal Mount Hook

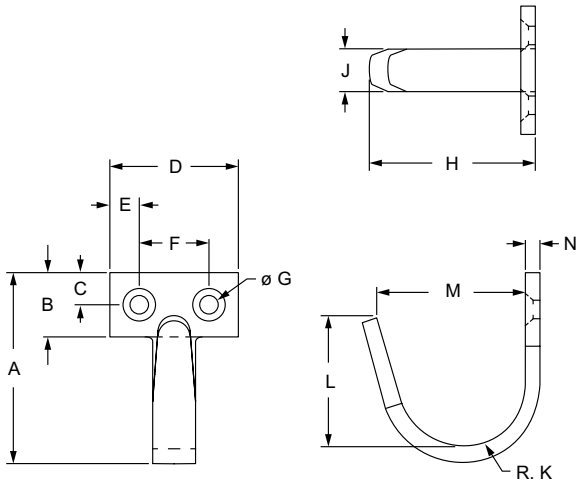

Part No.	Series	Material	A	B	C	D	E	F	G	H	J	K	L	M	N	Weight
14155	10 15 25 30 40 45	Steel	1.859"	.750"	.375"	1.515"	.359"	.813"	.204"	1.643"	.496"	.559"	1.194"	1.474"	.175"	.113 lb

Suggested Hardware (Mount to T-Slot)

Series	Part No.	Qty.	Bolt	Part No.	Qty.	T-Nut
10	3042	2	10-32 x .375" BHSCS	3375	2	Roll-in
15	3050	2	10-32 x .500" BHSCS	3932	2	Drop-in
25	11-5310	2	M5 x 10mm BHSCS	25-1956	2	Roll-in
30	11-5310	2	M5 x 10mm BHSCS	13115	2	Drop-in
40	11-5314	2	M5 x 14mm BHSCS	13116	2	Drop-in
45	11-5316	2	M5 x 16mm BHSCS	13127	2	Drop-in

80/20 BUILD YOUR IDEA
More on 80/20® products available at 8020.net

Magnetic Tool Holder

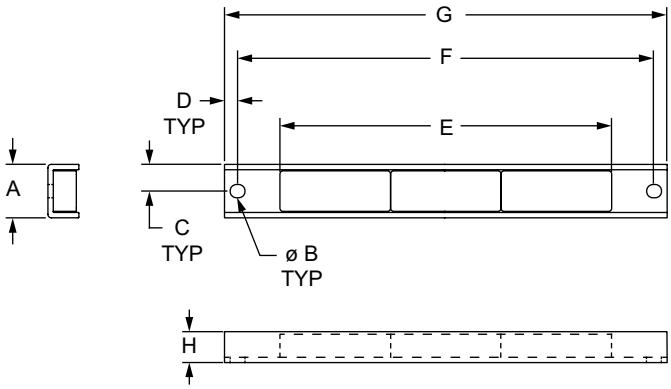

Part No.	Series	Material	Color	A	B	C	D	E	F	G	H	Weight
3959	10 15 25 30 40 45	Steel	Black	.950"	.236"	.475"	.233"	21.654"	23.160"	23.625"	.550"	2.062 lb

Suggested Hardware (Mount to T-Slot)

Series	Part No.	Qty.	Bolt	Part No.	Qty.	T-Nut
10	11-6312	2	M6 x 12mm BHSCS	3859	2	Slide-in
15	11-6312	2	M6 x 12mm BHSCS	3931	2	Drop-in
25	11-6310	2	M6 x 10mm BHSCS	25-1961	2	Slide-in
30	11-6310	2	M6 x 10mm BHSCS	13117	2	Drop-in
40	11-6312	2	M6 x 12mm BHSCS	40-1961	2	Slide-in
45	11-6312	2	M6 x 12mm BHSCS	13129	2	Drop-in

Accessories

Tool Holder - Open Bottom / Cup Holder - Closed Bottom

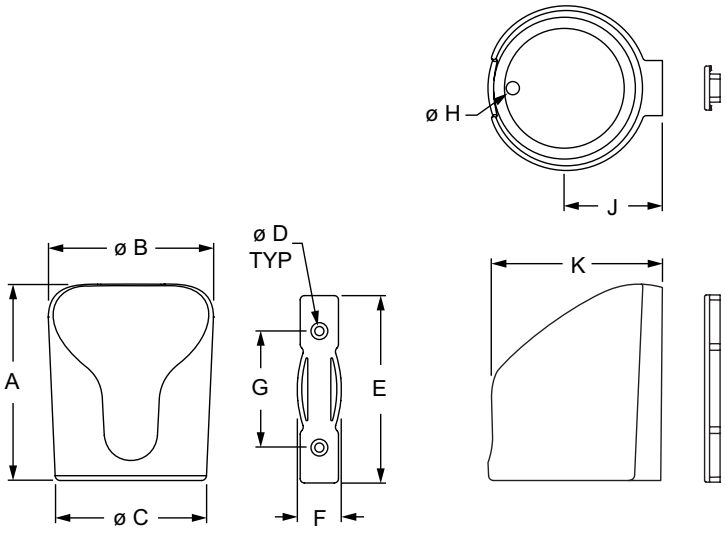

2286
Tool Holder

2287
Cup Holder

Part No.	Series	Material	Process	Color	A	B	C	D	E	F	G	H	J	K	Weight
2286	10 15 25 30 40	Nylon	Molded	Black	4.606"	3.874"	3.594"	.228"	4.449"	1.023"	2.756"	2.913"	2.303"	4.045"	.321 lb
2287					4.606"	3.874"	3.594"	.228"	4.449"	1.023"	2.756"	.315"	2.303"	4.045"	.346 lb

Suggested Hardware (Mount to T-Slot)

Series	Part No.	Qty.	Bolt	Part No.	Qty.	T-Nut
10	11-5716	2	M5 x 16mm FHSCS	3875	2	Roll-in
15	11-5716	2	M5 x 16mm FHSCS	3844	2	Roll-in
25	11-5716	2	M5 x 16mm FHSCS	25-1956	2	Roll-in
30	11-5716	2	M5 x 16mm FHSCS	13115	2	Drop-in
40	11-5716	2	M5 x 16mm FHSCS	40-3913	2	Roll-in

80/20 BUILD YOUR IDEA
More on 80/20® products available at 8020.net

Light-Duty Adhesive Clamp

- Snaps shut to secure documents, paper or vinyl up to .040” (1.016mm) thick
- Mounts with adhesive peel and stick backing

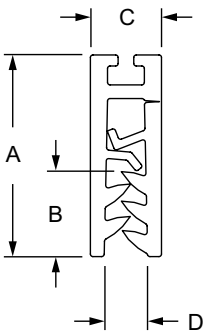

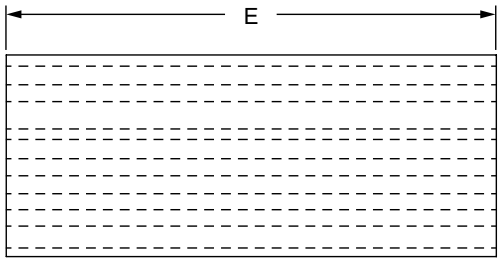

Part No.	Series	Material	Finish	Process	Color	A	B	C	D	E	Weight
2851	F M	PVC	Matte	Molded	Clear	.800”	.337”	.282”	.172”	3.000”	.017 lb
2852	F M					.800”	.337”	.282”	.172”	24.000”	.160 lb
65-2851	F M					20.32mm	8.56mm	7.16mm	4.37mm	76.20mm	.0076 kg
65-2852	F M					20.32mm	8.56mm	7.16mm	4.37mm	609.60mm	.0726 kg

Label Holder

- Anti-glare finish snaps into T-slot; slide labels in from side
- Sold in packs of 25

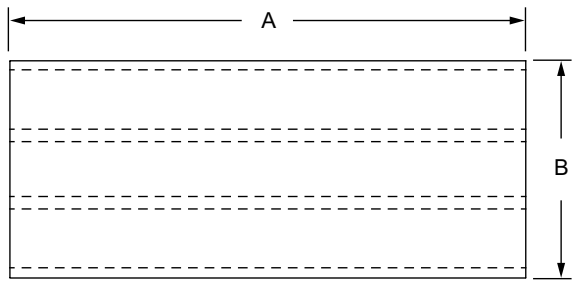

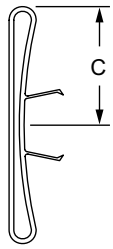

Part No.	Series	Material	Process	Color	A	B	C	Weight
2843	10	Plastic	Extruded	Clear	3.000”	1.000”	.500”	.247 lb
2844	10				6.000”	1.000”	.500”	.483 lb
2845	15				4.000”	2.000”	.630”	.699 lb
2846	15				6.000”	2.000”	.630”	1.072 lb
25-2843	25				76.20mm	25.40mm	12.70mm	.1122 kg
25-2844	25				152.40mm	25.40mm	12.70mm	.2194 kg
40-2845	40				101.60mm	50.80mm	15.90mm	.3171 kg
40-2846	40				152.40mm	50.80mm	15.90mm	.4865 kg

Accessories

Rubber Bumper

- Used as a door stop or shock mount
- Mounting hardware included

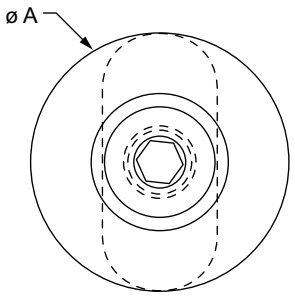

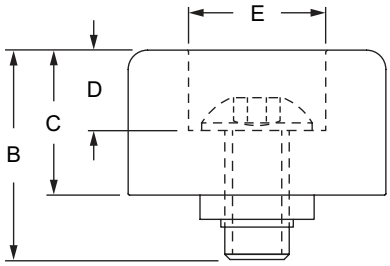

Part No.	Series	Material	Color	A	B	C	D	E	Weight
2850	10	Rubber	Black	1.000"	.813"	.563"	.313"	.531"	.035 lb
2849	15			1.500"	1.031"	.625"	.344"	.750"	.089 lb
25-2850	25 30			25.40mm	21.95mm	14.30mm	7.95mm	13.49mm	.0186 kg
40-2849	40 45			38.10mm	26.74mm	15.88mm	8.74mm	19.05mm	.0376 kg

Included Hardware (Mount to T-Slot)

Series	Part No.	Qty.	Bolt	Part No.	Qty.	T-Nut
10	3061	1	1/4-20 x 1/2" BHSCS	3382	1	Economy
15	3330	1	5/16-18 x 11/16" FBHSCS	3278	1	Economy
25 30	11-6314	1	M6 x 14mm BHSCS	3859	1	Economy
40 45	11-8318	1	M8 x 18mm BHSCS	3838	1	Economy

Tabletop Mounting Tape

- Double-sided tape that uses a high-strength bonding method
- Sold in packs of 10

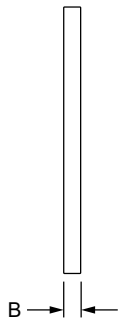

Part No.	Series	Material	Color	A	B	Weight
13099	F M	Acrylic	White	1.181" (30.00mm)	.039" (1.00mm)	.023 lb (.0104 kg)

80/20 BUILD YOUR IDEA
More on 80/20® products available at 8020.net

Introduction to Pressure Manifolds

Manifolds are used to add a pressurized substance, such as liquids or air, into the center cavity of a T-slot profile. You'll commonly find this in material handling processes, such as work and assembly stations, because the pressurized profile allows you to incorporate pneumatic tools directly into the work area.

There are a range of access, feed, and stopper plates available to fit your structure.

As an example, a manifold configuration could include an access plate attached to the supply line and feed plate mounted where the pressurized substance is released. The stopper plate secures to the profile end to form a tight seal.

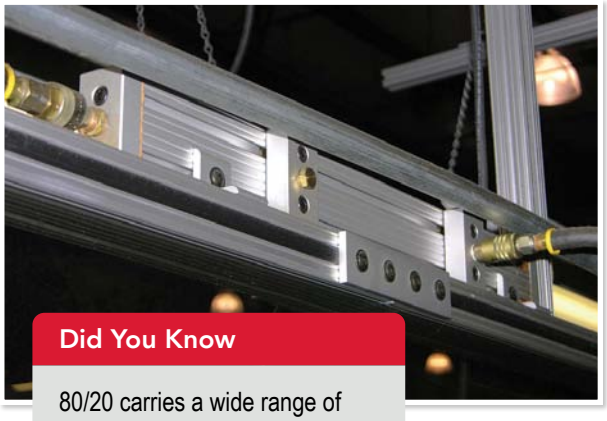

Did You Know

80/20 carries a wide range of structural shapes that allow you to design a customized manifold.

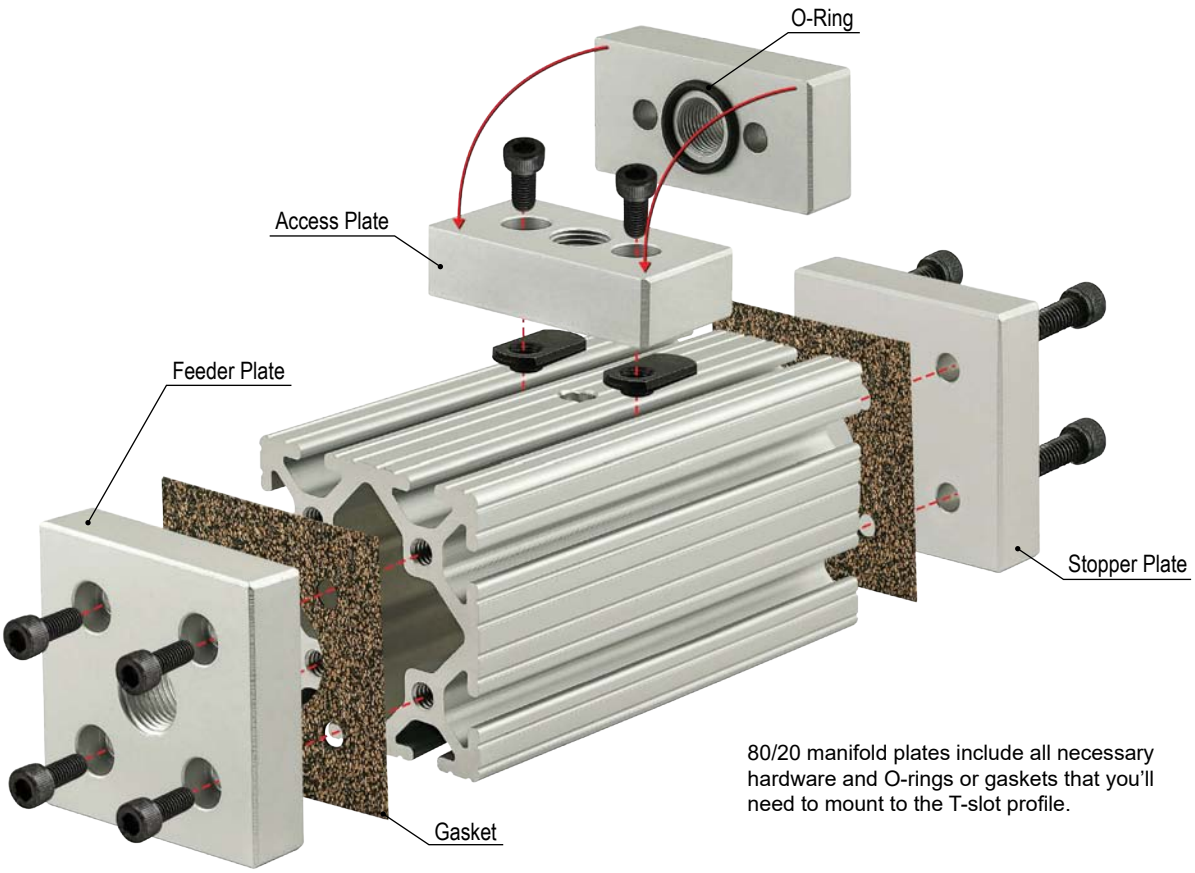

80/20 manifold plates include all necessary hardware and O-rings or gaskets that you'll need to mount to the T-slot profile.

Accessories

3-Hole Pressure Manifold Feed Plate

- Includes tapped hole; mounts to profile end for sealed connection where substance is released
- Mounting hardware and gasket included
- Maximum allowable pressure is 150 psi (1034.21 kPa)

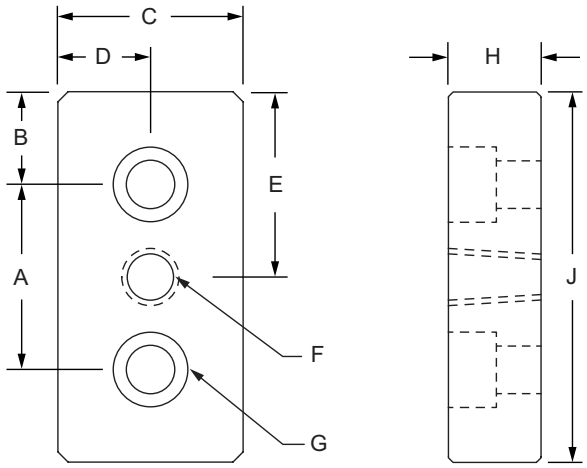

Part No.	Series	Material	Alloy	Process	Finish	A	B	C	D	E	F (Thread)	G (Bolt Size)	H	J	Weight
2151	10	Aluminum	6005A – T61	Milled	Clear Anodize	1.000"	.500"	1.000"	.500"	1.000"	1/4" NPT	1/4 SHCS	.490"	2.000"	.112 lb
2151-Black	10				Black Anodize	1.000"	.500"	1.000"	.500"	1.000"	1/4" NPT	1/4 SHCS	.490"	2.000"	.112 lb
2150	15				Clear Anodize	1.500"	.750"	1.500"	.750"	1.500"	3/8" NPT	5/16 SHCS	.740"	3.000"	.339 lb
2150-Black	15				Black Anodize	1.500"	.750"	1.500"	.750"	1.500"	3/8" NPT	5/16 SHCS	.740"	3.000"	.339 lb
25-2151	25				Clear Anodize	25.00mm	12.50mm	25.00mm	12.50mm	25.00mm	1/4" NPT	M6 SHCS	11.75mm	50.00mm	.0462 kg
25-2151-Black	25				Black Anodize	25.00mm	12.50mm	25.00mm	12.50mm	25.00mm	1/4" NPT	M6 SHCS	11.75mm	50.00mm	.0462 kg
40-2150	40				Clear Anodize	40.00mm	20.00mm	40.00mm	20.00mm	40.00mm	3/8" NPT	M8 SHCS	18.75mm	80.00mm	.1697 kg
40-2150-Black	40				Black Anodize	40.00mm	20.00mm	40.00mm	20.00mm	40.00mm	3/8" NPT	M8 SHCS	18.75mm	80.00mm	.1697 kg

* Included mounting hardware and required machining services on page 8-49

3-Hole Gasket for Pressure Manifold

Part No.	Series	Color	Material	A	B	C	D	E	F	G	H	J	Weight
2152	10	Brown	velumoid	1.000"	.500"	1.000"	.500"	1.000"	.515"	.265"	.030"	2.000"	.001 lb
2153	15		CR-20	1.500"	.750"	1.500"	.750"	1.500"	.775"	.275"	.030"	3.000"	.003 lb
25-2152	25		velumoid	25.00mm	12.50mm	25.00mm	12.50mm	25.00mm	12.50mm	6.00mm	0.76mm	50.00mm	.0007 kg
40-2153	40		CR-20	40.00mm	20.00mm	40.00mm	20.00mm	40.00mm	20.00mm	7.00mm	0.76mm	80.00mm	.0018 kg

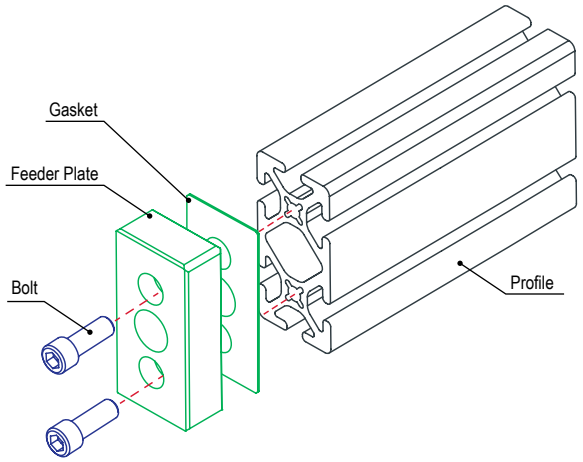

80/20 BUILD YOUR IDEA
More on 80/20® products available at 8020.net

2-Hole Pressure Manifold Stopper Plate

- Mounts on the profile end to form a secure seal
- Mounting hardware and gasket included
- Maximum allowable pressure is 150 psi (1034.21 kPa)

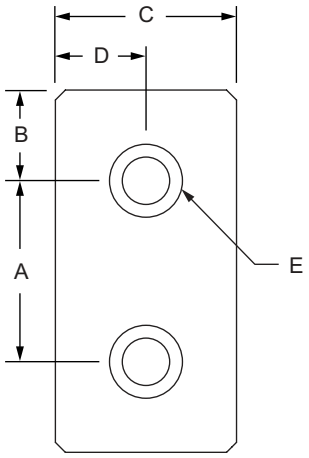

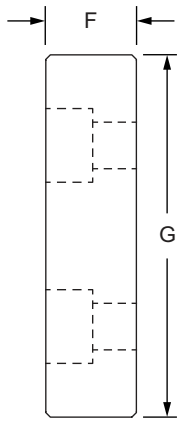

Part No.	Series	Material	Alloy	Process	Finish	A	B	C	D	E (Bolt Size)	F	G	Weight
2341	10	Aluminum	6005A – T61	Milled	Clear Anodize	1.000"	.500"	1.000"	.500"	1/4 SHCS	.490"	2.000"	.120 lb
2341-Black	10				Black Anodize	1.000"	.500"	1.000"	.500"	1/4 SHCS	.490"	2.000"	.120 lb
2340	15				Clear Anodize	1.500"	.750"	1.500"	.750"	5/16 SHCS	.740"	3.000"	.362 lb
2340-Black	15				Black Anodize	1.500"	.750"	1.500"	.750"	5/16 SHCS	.740"	3.000"	.362 lb
25-2341	25				Clear Anodize	25.00mm	12.50mm	25.00mm	12.50mm	M6 SHCS	11.75mm	50.00mm	.0499 kg
25-2341-Black	25				Black Anodize	25.00mm	12.50mm	25.00mm	12.50mm	M6 SHCS	11.75mm	50.00mm	.0499 kg
40-2340	40				Clear Anodize	40.00mm	20.00mm	40.00mm	20.00mm	M8 SHCS	18.75mm	80.00mm	.1787 kg
40-2340-Black	40				Black Anodize	40.00mm	20.00mm	40.00mm	20.00mm	M8 SHCS	18.75mm	80.00mm	.1787 kg

Required Machining Services

Machining Type	Machined	Reference Page
Tap Profile End	Mounting Profile	10-3

Included Hardware (Mount to T-Slot)

Part No.	Series	Qty.	Bolt
3071	10	2	1/4-20 x 1" SHCS
3119	15	2	5/16-18 x 7/8" SHCS
13-6525	25	2	M6 x 25mm SHCS
13-8522	40	2	M8 x 22mm SHCS

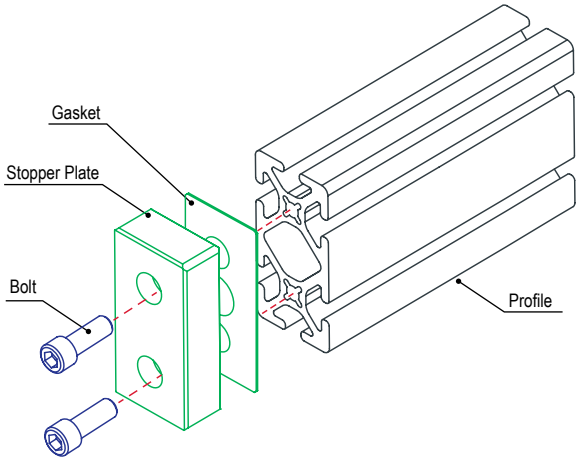

Accessories

5-Hole Square Pressure Manifold Feed Plate

- Includes tapped hole; mounts to profile end for sealed connection where substance is released
- Mounting hardware and gasket included
- Maximum allowable pressure is 150 psi (1034.21 kPa)

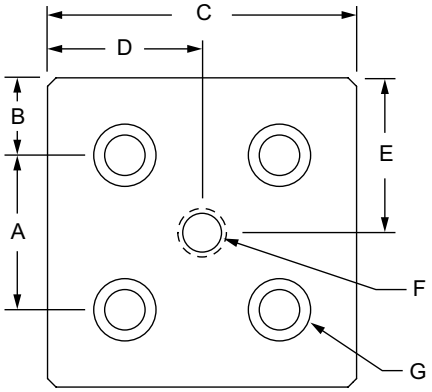

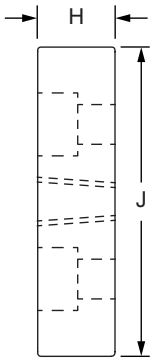

Part No.	Series	Material	Alloy	Process	Finish	A	B	C	D	E	F (Thread)	G (Bolt Size)	H	J	Weight
2159	10	Aluminum	6005A – T61	Milled	Clear Anodize	1.000"	.500"	2.000"	1.000"	1.000"	3/8" NPT	1/4 SHCS	.490"	2.000"	.176 lb
2159-Black	10				Black Anodize	1.000"	.500"	2.000"	1.000"	1.000"	3/8" NPT	1/4 SHCS	.490"	2.000"	.176 lb
2160	15				Clear Anodize	1.500"	.750"	3.000"	.750"	1.500"	1/2" NPT	5/16 SHCS	.740"	3.000"	.685 lb
2160-Black	15				Black Anodize	1.500"	.750"	3.000"	.750"	1.500"	1/2" NPT	5/16 SHCS	.740"	3.000"	.685 lb
25-2159	25				Clear Anodize	25.00mm	12.50mm	50.00mm	12.50mm	25.00mm	3/8" NPT	M6 SHCS	11.75mm	50.00mm	.0938 kg
25-2159-Black	25				Black Anodize	25.00mm	12.50mm	50.00mm	12.50mm	25.00mm	3/8" NPT	M6 SHCS	11.75mm	50.00mm	.0938 kg
40-2160	40				Clear Anodize	40.00mm	20.00mm	80.00mm	20.00mm	40.00mm	1/2" NPT	M8 SHCS	18.75mm	80.00mm	.3424 kg
40-2160-Black	40				Black Anodize	40.00mm	20.00mm	80.00mm	20.00mm	40.00mm	1/2" NPT	M8 SHCS	18.75mm	80.00mm	.3424 kg

* Included mounting hardware and required machining services on page 8-51

5-Hole Square Gasket for Pressure Manifold

Part No.	Series	Color	Material	A	B	C	D	E	F	G	H	J	Weight
2154	10	Brown	CR-20	1.000"	.500"	2.000"	1.000"	1.000"	.750"	.265"	.030"	2.000"	.003 lb
2155	15			1.500"	.750"	3.000"	.750"	1.500"	1.250"	.285"	.030"	3.000"	.007 lb
25-2154	25			25.00mm	12.50mm	50.00mm	12.50mm	25.00mm	12.50mm	6.00mm	.76mm	50.00mm	.0013 kg
40-2155	40			40.00mm	20.00mm	80.00mm	20.00mm	40.00mm	33.00mm	7.00mm	.76mm	80.00mm	.0032 kg

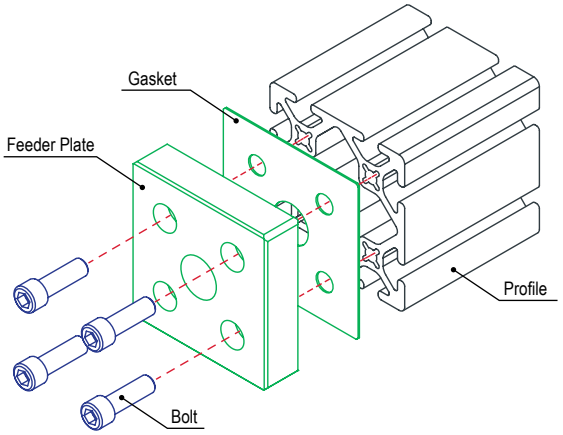

80/20 BUILD YOUR IDEA
More on 80/20® products available at 8020.net

4-Hole Pressure Manifold Stopper Plate

- Mounts on the profile end to form a secure seal
- Mounting hardware and gasket included
- Maximum allowable pressure is 150 psi (1034.21 kPa)

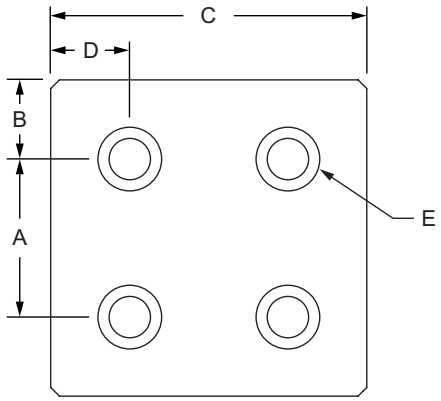

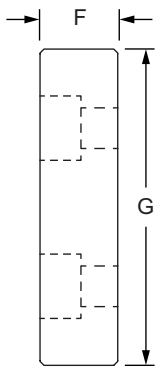

Part No.	Series	Material	Alloy	Process	Finish	A	B	C	D	E (Bolt Size)	F	G	Weight
2349	10	Aluminum	6005A – T61	Milled	Clear Anodize	1.000"	.500"	2.000"	.500"	1/4 SHCS	.490"	2.000"	.238 lb
2349-Black	10				Black Anodize	1.000"	.500"	2.000"	.500"	1/4 SHCS	.490"	2.000"	.238 lb
2350	15				Clear Anodize	1.500"	.750"	3.000"	.750"	5/16 SHCS	.740"	3.000"	.721 lb
2350-Black	15				Black Anodize	1.500"	.750"	3.000"	.750"	5/16 SHCS	.740"	3.000"	.721 lb
25-2349	25				Clear Anodize	25.00mm	12.50mm	50.00mm	12.50mm	M6 SHCS	11.75mm	50.00mm	.0999 kg
25-2349-Black	25				Black Anodize	25.00mm	12.50mm	50.00mm	12.50mm	M6 SHCS	11.75mm	50.00mm	.0999 kg
40-2350	40				Clear Anodize	40.00mm	20.00mm	80.00mm	20.00mm	M8 SHCS	18.75mm	80.00mm	.3621 kg
40-2350-Black	40				Black Anodize	40.00mm	20.00mm	80.00mm	20.00mm	M8 SHCS	18.75mm	80.00mm	.3621 kg

Required Machining Services

Machining Type	Machined	Reference Page
Tap Profile End	Mounting Profile	10-3

Included Hardware (Mount to Profile End)

Part No.	Series	Qty.	Bolt
3071	10	4	1/4-20 x 1" SHCS
3119	15	4	5/16-18 x 7/8" SHCS
13-6525	25	4	M6 x 25mm SHCS
13-8522	40	4	M8 x 22mm SHCS

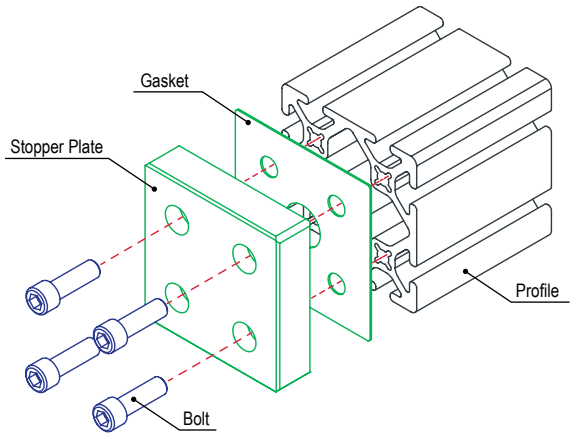

Accessories

5-Hole Rectangular Pressure Manifold Feed Plate

- Includes tapped hole; mounts to profile end for sealed connection where substance is released
- Mounting hardware and gasket included
- Maximum allowable pressure is 150 psi (1034.21 kPa)

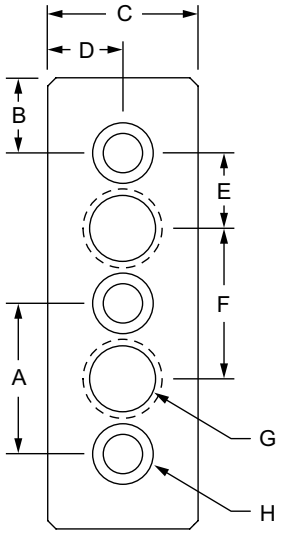

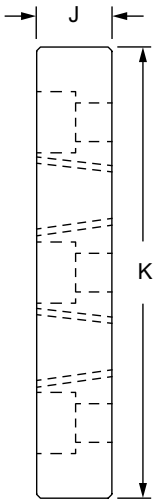

Part No.	Series	Material	Alloy	Process	Finish	A	B	C	D	E	F	G (Thread)	H (Bolt Size)	J	K	Weight
2447	10	Aluminum	6005A – T61	Milled	Clear Anodize	1.000"	.500"	1.000"	.500"	.500"	1.000"	1/4" NPT	1/4 SHCS	.490"	3.000"	.161 lb
2447-Black	10				Black Anodize	1.000"	.500"	1.000"	.500"	.500"	1.000"	1/4" NPT	1/4 SHCS	.490"	3.000"	.161 lb
2162	15				Clear Anodize	1.500"	.750"	1.500"	.750"	.750"	1.500"	3/8" NPT	5/16 SHCS	.740"	4.500"	.495 lb
2162-Black	15				Black Anodize	1.500"	.750"	1.500"	.750"	.750"	1.500"	3/8" NPT	5/16 SHCS	.740"	4.500"	.495 lb

* Included mounting hardware and required machining services on page 8-53

5-Hole Rectangular Gasket for Pressure Manifold

Part No.	Series	Color	Material	A	B	C	D	E	F	G	H	J	K	Weight
2172	10	Brown	CR-20	1.000"	.500"	1.000"	.500"	.500"	1.000"	.515"	.265"	.030"	3.000"	.002 lb
2133	15			1.500"	.750"	1.500"	.750"	.750"	1.500"	.750"	.265"	.030"	4.500"	.006 lb

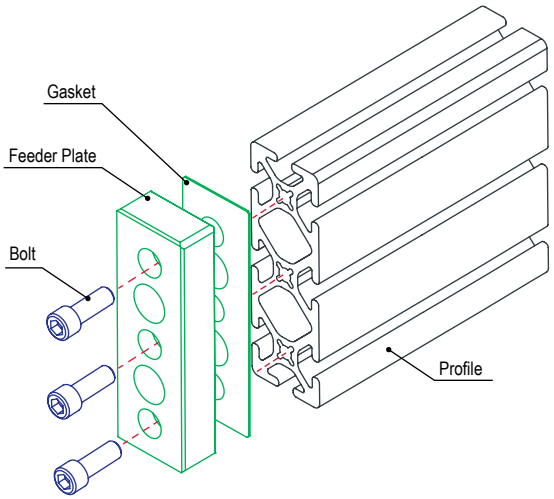

80/20 BUILD YOUR IDEA
More on 80/20® products available at 8020.net

3-Hole Pressure Manifold Stopper Plate

- Mounts on the profile end to form a secure seal
- Mounting hardware and gasket included
- Maximum allowable pressure is 150 psi (1034.21 kPa)

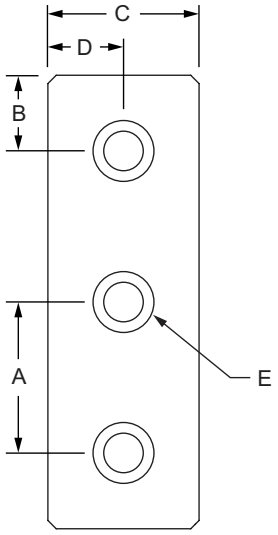

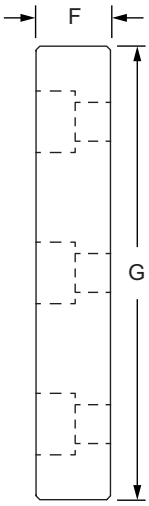

Part No.	Series	Material	Alloy	Process	Finish	A	B	C	D	E (Bolt Size)	F	G	Weight
2446	10	Aluminum	6005A – T61	Milled	Clear Anodize	1.000"	.500"	1.000"	.500"	1/4 SHCS	.490"	3.000"	.178 lb
2446-Black	10				Black Anodize	1.000"	.500"	1.000"	.500"	1/4 SHCS	.490"	3.000"	.178 lb
2161	15				Clear Anodize	1.500"	.750"	1.500"	.750"	5/16 SHCS	.740"	4.500"	.540 lb
2161-Black	15				Black Anodize	1.500"	.750"	1.500"	.750"	5/16 SHCS	.740"	4.500"	.540 lb

Required Machining Services

Machining Type	Machined	Reference Page
Tap Profile End	Mounting Profile	10-3

Included Hardware (Mount to Profile End)

Part No.	Series	Qty.	Bolt
3071	10	3	1/4-20 x 1" SHCS
3119	15	3	5/16-18 x 7/8" SHCS

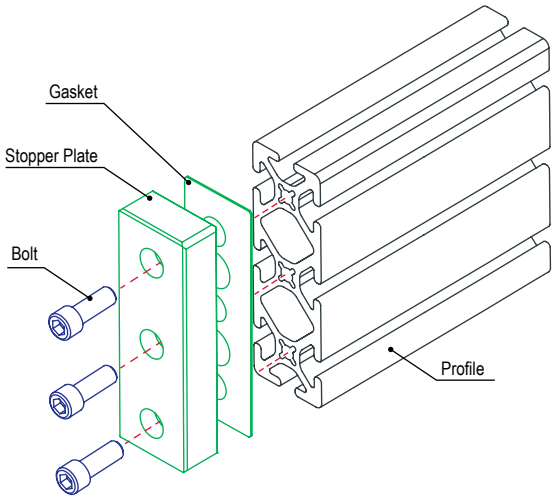

Accessories

12-Hole Pressure Manifold Feed Plate

- Includes tapped hole; mounts to profile end for sealed connection where substance is released
- Mounting hardware and gasket included
- Maximum allowable pressure is 150 psi (1034.21 kPa)

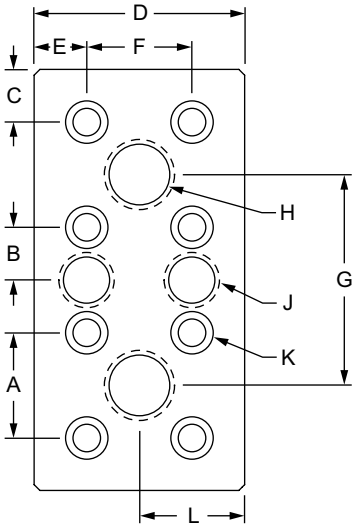

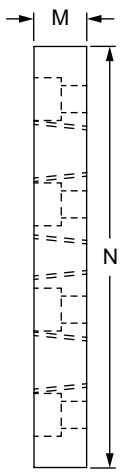

Part No.	Series	Color	A	B	C	D	E	F	G	H (Thread)	J (Thread)	K (Thread)	L	M	N	Weight
2449	10	Clear	1.000"	.500"	.500"	2.000"	.500"	1.000"	2.000"	3/8" NPT	1/4" NPT	1/4 SHCS	1.000"	.490"	4.000"	.320 lb
2449-Black	10	Black	1.000"	.500"	.500"	2.000"	.500"	1.000"	2.000"	3/8" NPT	1/4" NPT	1/4 SHCS	1.000"	.490"	4.000"	.320lb
2164	15	Clear	1.500"	.750"	.750"	3.000"	.750"	1.500"	3.000"	1/2" NPT	3/8" NPT	5/16 SHCS	1.500"	.740"	6.000"	1.328 lb
2164-Black	15	Black	1.500"	.750"	.750"	3.000"	.750"	1.500"	3.000"	1/2" NPT	3/8" NPT	5/16 SHCS	1.500"	.740"	6.000"	1.328 lb

* Included mounting hardware, material specifications and required machining services on page 8-55

12-Hole Gasket for Pressure Manifold

Part No.	Series	Color	Material	A	B	C	D	E	F	G	H	J	K	L	M	N	Weight
2173	10	Brown	Velumoid	1.000"	.500"	.500"	2.000"	.500"	1.000"	2.000"	.750"	.530"	.265"	1.000"	.030"	4.000"	.006 lb
2144	15			1.500"	.750"	.750"	3.000"	.750"	1.500"	3.000"	1.250"	.750"	.275"	1.500"	.030"	6.000"	.012 lb

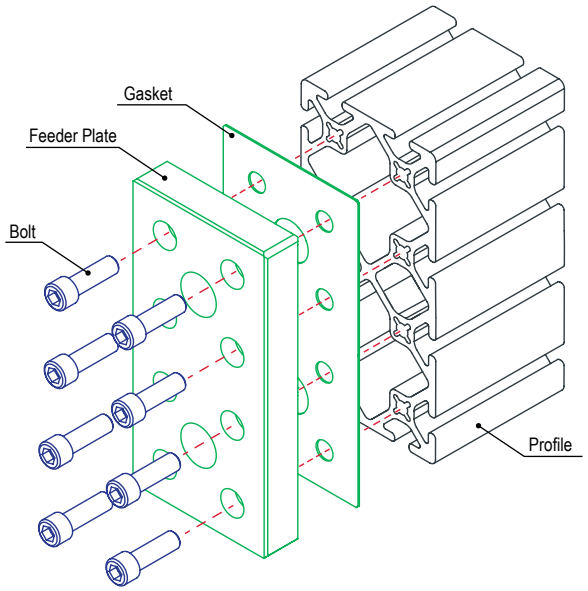

80/20 BUILD YOUR IDEA
More on 80/20® products available at 8020.net

8-Hole Pressure Manifold Stopper Plate

- Mounts on the profile end to form a secure seal
- Mounting hardware and gasket included
- Maximum allowable pressure is 150 psi (1034.21 kPa)

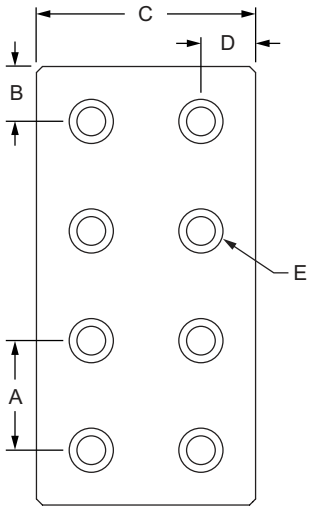

Part No.	Series	Color	A	B	C	D	E (Bolt Size)	F	G	Weight
2448	10	Clear	1.000"	.500"	2.000"	.500"	1/4 SHCS	.490"	4.000"	.472 lb
2448-Black	10	Black	1.000"	.500"	2.000"	.500"	1/4 SHCS	.490"	4.000"	.472 lb
2163	15	Clear	1.500"	.750"	3.000"	.750"	5/16 SHCS	.740"	6.000"	1.483 lb
2163-Black	15	Black	1.500"	.750"	3.000"	.750"	5/16 SHCS	.740"	6.000"	1.483 lb

Plate Material Specifications

Material	Alloy	Finish	Process
Aluminum	6005A – T61	Anodize	Milled

Required Machining Services

Machining Type	Machined	Reference Page
Tap Profile End	Mounting Profile	10-3

Included Hardware (Mount to Profile End)

Part No.	Series	Qty.	Bolt
3071	10	8	1/4-20 x 1" SHCS
3119	15	8	5/16-18 x 7/8" SHCS

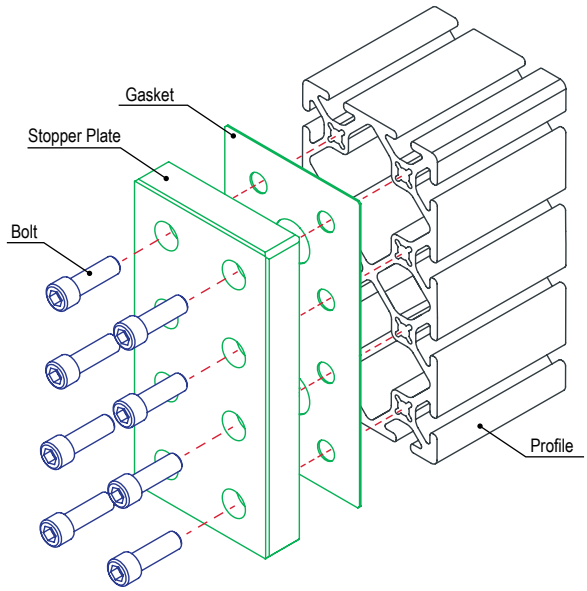

Accessories

Pressure Manifold Access Plate

- Includes tapped hole; mounts to profile side
- O-ring to provide tight seal; mounting hardware included
- Maximum allowable pressure is 150 psi (1034.21 kPa)

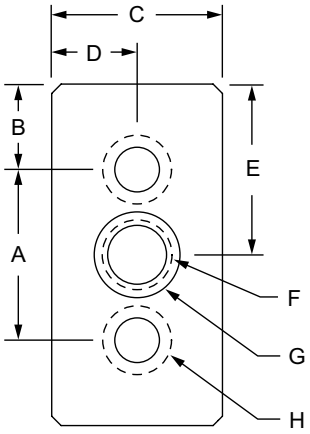

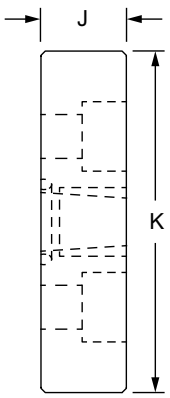

Part No.	Series	Color	A	B	C	D	E	F (Thread)	G (O-Ring Size)	H (Bolt Size)	J	K	Weight
2439	10	Clear	1.000"	.500"	1.000"	.500"	1.000"	1/8" NPT	1/2" OD	1/4 SHCS	.500"	2.000"	.126 lb
2439-Black	10	Black	1.000"	.500"	1.000"	.500"	1.000"	1/8" NPT	1/2" OD	1/4 SHCS	.500"	2.000"	.125 lb
2440	15	Clear	1.500"	.750"	1.500"	.750"	1.500"	1/4" NPT	1" OD	5/16 SHCS	.750"	3.000"	.387 lb
2440-Black	15	Black	1.500"	.750"	1.500"	.750"	1.500"	1/4" NPT	1" OD	5/16 SHCS	.750"	3.000"	.387 lb
2441	15	Clear	1.500"	.750"	1.500"	.750"	1.500"	3/8" NPT	1" OD	5/16 SHCS	.750"	3.000"	.376 lb
2441-Black	15	Black	1.500"	.750"	1.500"	.750"	1.500"	3/8" NPT	1" OD	5/16 SHCS	.750"	3.000"	.376 lb
25-2439	25	Clear	25.00mm	12.50mm	25.00mm	12.50mm	25.00mm	1/8" NPT	1/2" OD	M6 SHCS	12.00mm	50.00mm	.0524 kg
25-2439-Black	25	Black	25.00mm	12.50mm	25.00mm	12.50mm	25.00mm	1/8" NPT	1/2" OD	M6 SHCS	12.00mm	50.00mm	.0524 kg
40-2440	40	Clear	40.00mm	20.00mm	40.00mm	20.00mm	40.00mm	1/4" NPT	1" OD	M8 SHCS	19.00mm	80.00mm	.1907 kg
40-2440-Black	40	Black	40.00mm	20.00mm	40.00mm	20.00mm	40.00mm	1/4" NPT	1" OD	M8 SHCS	19.00mm	80.00mm	.1907 kg
40-2441	40	Clear	40.00mm	20.00mm	40.00mm	20.00mm	40.00mm	3/8" NPT	1" OD	M8 SHCS	19.00mm	80.00mm	.1870 kg
40-2441-Black	40	Black	40.00mm	20.00mm	40.00mm	20.00mm	40.00mm	3/8" NPT	1" OD	M8 SHCS	19.00mm	80.00mm	.1870 kg

* Included mounting hardware, material specifications and required machining services on page 8-57

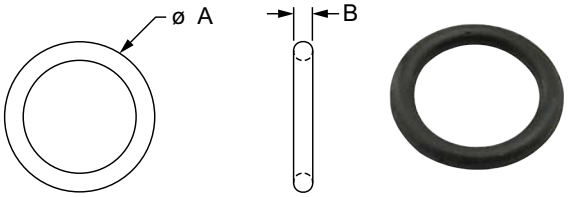

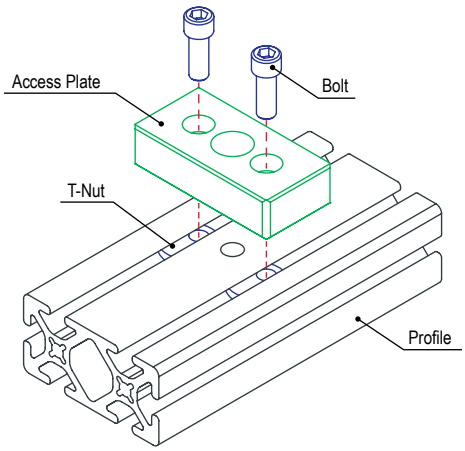

O-Ring for Pressure Manifold

Part No.	Series	Material	Grade	Color	A	B	Weight
2157	10	Nitrile	70 duro	Black	.500"	.062"	.0002 lb
2156	15				1.000"	.100"	.0010 lb
25-2157	25				12.70mm	1.59mm	.0001 kg
40-2156	40				25.40mm	2.54mm	.0005 kg

80/20 BUILD YOUR IDEA
More on 80/20® products available at 8020.net

Pressure Manifold Tap Ready Access Plate

- Tap-ready access point; mounds to profile side
- O-ring to provide tight seal; mounting hardware included
- Maximum allowable pressure is 150 psi (1034.21 kPa)

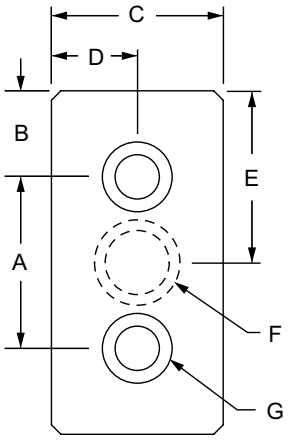

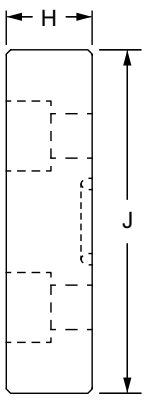

Part No.	Series	Color	A	B	C	D	E	F (O-Ring Size)	G (Bolt Size)	H	J	Weight
2451	10	Clear	1.000"	.500"	1.000"	.500"	1.000"	1/2" OD	1/4 SHCS	.500"	2.000"	.127 lb
2451-Black	10	Black	1.000"	.500"	1.000"	.500"	1.000"	1/2" OD	1/4 SHCS	.500"	2.000"	.127 lb
2450	15	Clear	1.500"	.750"	1.500"	.750"	1.500"	1" OD	5/16 SHCS	.750"	3.000"	.397 lb
2450-Black	15	Black	1.500"	.750"	1.500"	.750"	1.500"	1" OD	5/16 SHCS	.750"	3.000"	.397 lb
25-2451	25	Clear	25.00mm	12.50mm	25.00mm	12.50mm	25.00mm	1/2" OD	M6 SHCS	12.00mm	50.00mm	.0544 kg
25-2451-Black	25	Black	25.00mm	12.50mm	25.00mm	12.50mm	25.00mm	1/2" OD	M6 SHCS	12.00mm	50.00mm	.0544 kg
40-2450	40	Clear	40.00mm	20.00mm	40.00mm	20.00mm	40.00mm	1" OD	M8 SHCS	19.00mm	80.00mm	.1962 kg
40-2450-Black	40	Black	40.00mm	20.00mm	40.00mm	20.00mm	40.00mm	1" OD	M8 SHCS	19.00mm	80.00mm	.1962 kg

Plate Material Specifications

Material	Alloy	Finish	Process
Aluminum	6005A – T61	Anodize	Milled

Required Machining Services

Machining Type	Machined	Reference Page
Manifold Access Profile Milling	Mounting Profile	10-21

Included Hardware (Mount to T-Slot)

Series	Part No.	Qty.	Bolt	Part No.	Qty.	T-Nut
10	3062	2	1/4-20 x 1/2" SHCS	3382	2	Economy
15	3119	2	5-16/18 x 7/8" SHCS	3278	2	Economy
25	13-6512	2	M6 x 12mm SHCS	3859	2	Economy
40	13-8522	2	M8 x 22mm SHCS	3838	2	Economy

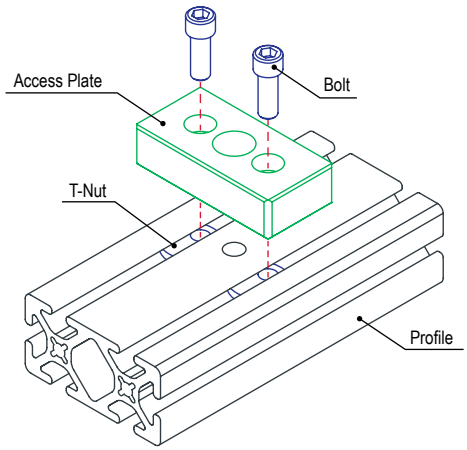

Accessories

Standard Gravity Roller System

- Use the chart below starting with “A” to determine your part numbers for building a gravity roller system
- Order custom length gravity rollers (pg. 8-59)

Support Rail Opening Reference “A”	Connector Part No.	Roller Part No.	Stopper Part No.	Support Part No.
11.875”	**9821**	**9840**	**9860**	**9823**
13.375”	**9822**	**9841**	**9861**	**9824**
14.875”	**9823**	**9842**	**9862**	**9825**
16.375”	**9824**	**9843**	**9863**	**9826**
17.875”	**9825**	**9844**	**9864**	**9827**
19.375”	**9826**	**9845**	**9865**	**9828**
20.875”	**9827**	**9846**	**9866**	**9829**
22.375”	**9828**	**9847**	**9867**	**9830**
23.875”	**9829**	**9848**	**9868**	**9831**

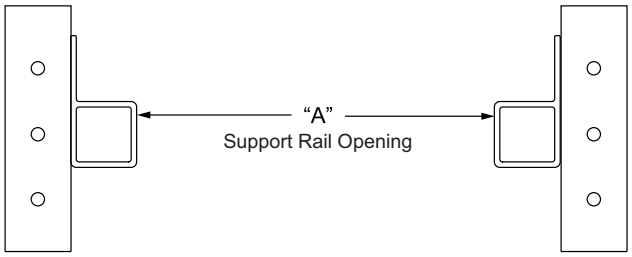

Example: If "A" = 14.875"

Part No.	Description
9823	14.875” Connector Rod
9842	14.815” Gravity Roller
9862	17.875” P-Tube Stopper
9825	17.875” Support Connector Rod

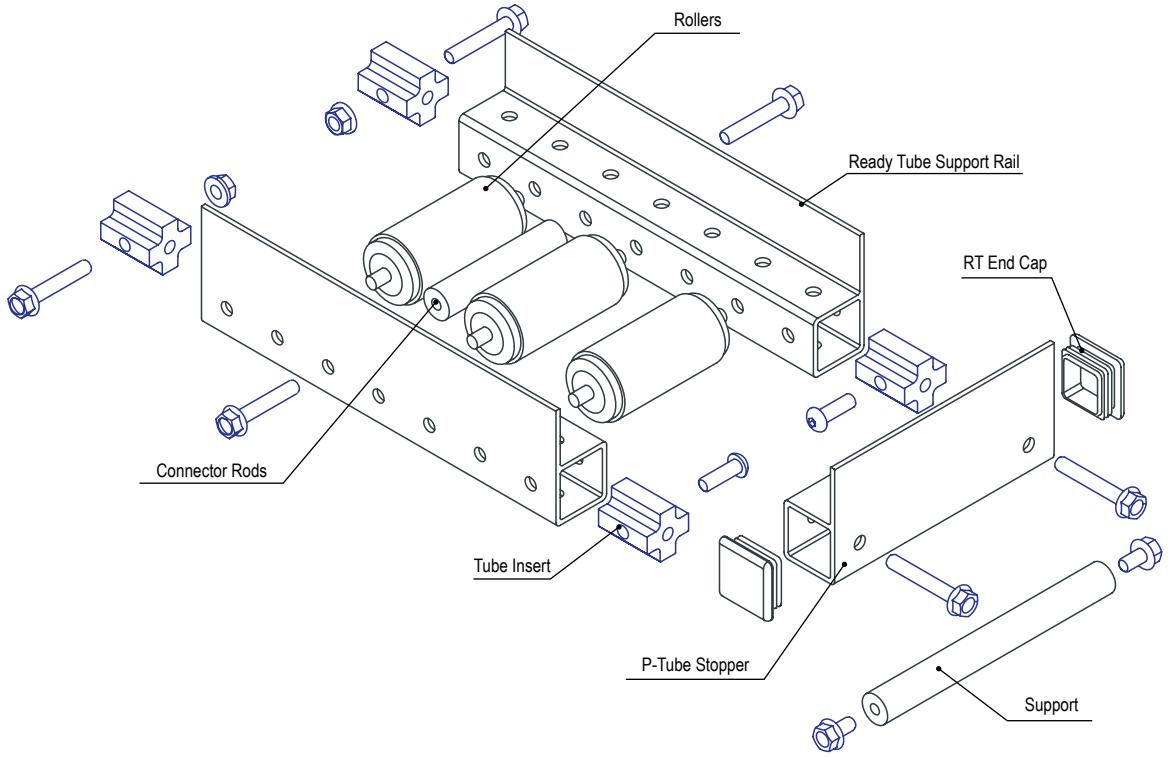

80/20 BUILD YOUR IDEA
More on 80/20® products available at 8020.net

Gravity Roller

- Used with Ready Tube or gravity roller mounting blocks (8-60)
- Spring-loaded pins snap easily into holes

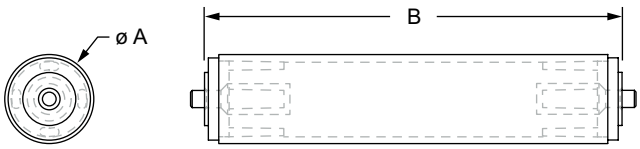

Part No.	Series	Material	Process	Finish	A	B	Weight
9840	15 40 45 RT	Aluminum / Plastic	Assembled	Clear Anodize	1.625"	11.815"	1.065 lb
9841						13.315"	1.153 lb
9842						14.815"	1.241 lb
9843						16.315"	1.330 lb
9844						17.815"	1.418 lb
9845						19.315"	1.506 lb
9846						20.815"	1.595 lb
9847						22.305"	1.683 lb
9848						23.815"	1.772 lb

Custom Gravity Roller

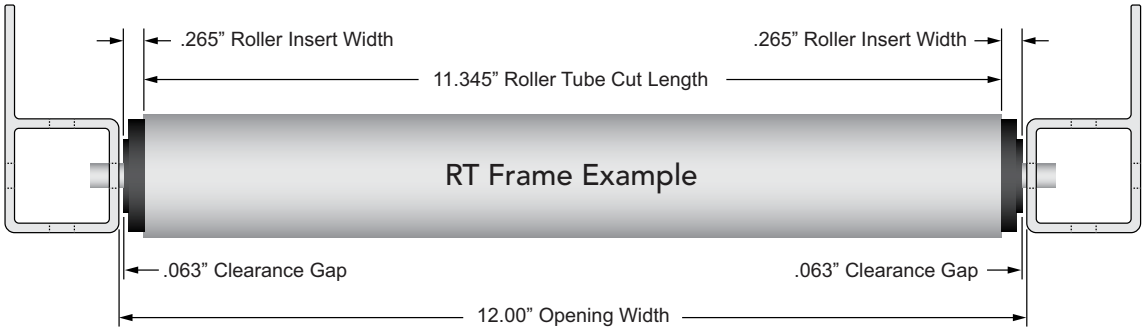

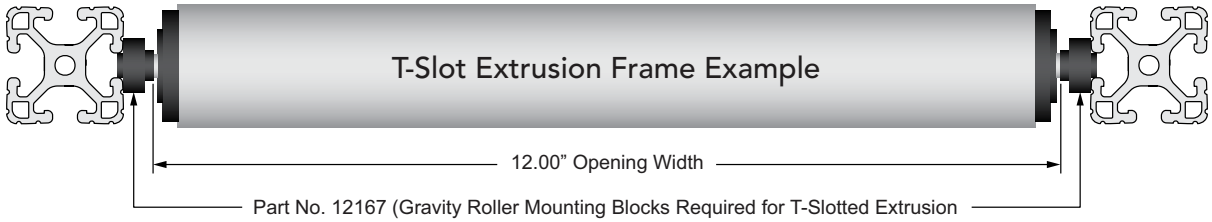

How to Calculate a Custom Gravity Tube Length
12.00" - .063" - .063" - .265" - .265" = 11.345" Tube Length

How to Order a Custom Ready Tube Gravity Roller	
Part No.	Description
9740	Gravity Roller Tube
7212	Cut to Length for 9740 Gravity Roller Tube
7165*	Roller Inserts and Gravity Roller Assembly Service

*Only used on 4.00" to 27.00" tubes.

Accessories

Gravity Roller Mounting Block

- Used with gravity rollers (8-59); block secures in T-slot (see suggested hardware)
- Roller pin snaps in and out of the block

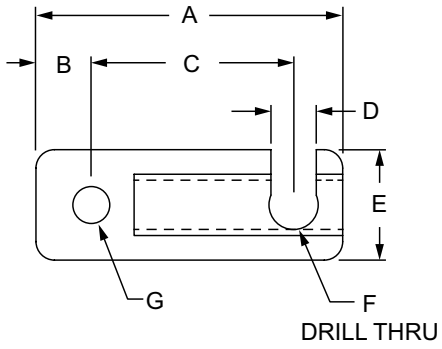

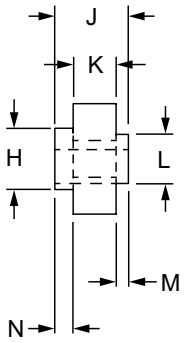

Part No.	Series	A	B	C	D	E	F	G	H	J	K	L	M	N	Weight
12167	15 40 45	1.969"	.354"	1.299"	.291"	.709"	.314"	.236"	.394"	.472"	.276"	.315"	.079"	.118"	.019 lb

Material Specifications

Material	Grade	Process	Finish
Glass Filled Nylon	PA6 GF30	Molded	Matte Black

Suggested Hardware (Mount to T-Slot)

Part No.	Series	Qty.	Bolt	T-Nut
75-3601	15 40	1	M6 x 14mm BHSCS	Drop-In
75-3482	45	1	M6 x 18mm BHSCS	Drop-In

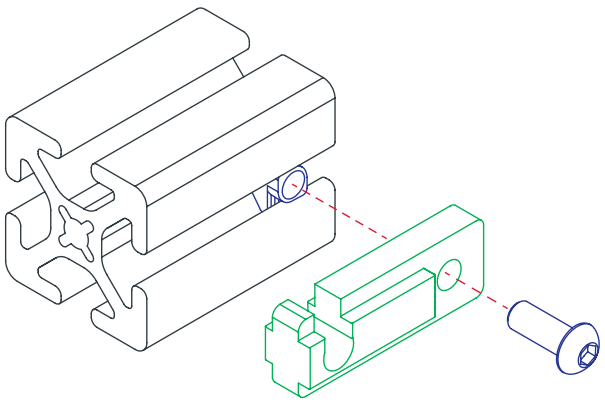

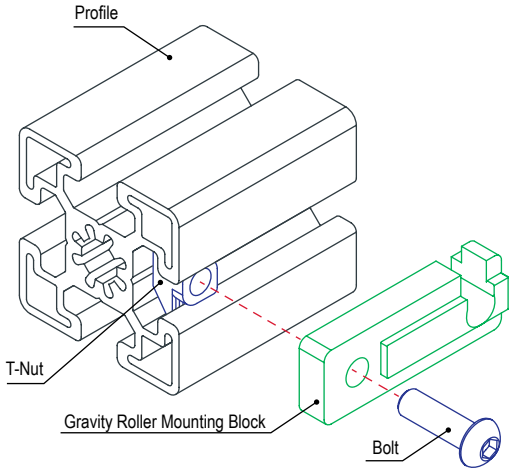

80/20 BUILD YOUR IDEA
More on 80/20® products available at 8020.net

Connector Rod

- Available in stock lengths or stock profile of 150” (3683mm); stock profile can be custom cut and tapped

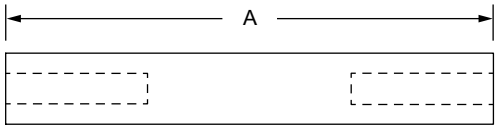

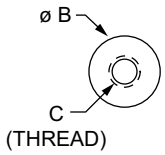

Part No.	Series	Material	Alloy	Process	Finish	A	B	C	Weight
9821	RT	Aluminum	6005A – T61	Machined	Clear Anodize	11.875”	.750”	5/16-18	0.407 lb
9822	RT					13.375”	.750”	5/16-18	0.494 lb
9823	RT					14.875”	.750”	5/16-18	0.550 lb
9824	RT					16.375”	.750”	5/16-18	0.605 lb
9825	RT					17.875”	.750”	5/16-18	0.661 lb
9826	RT					19.375”	.750”	5/16-18	0.716 lb
9827	RT					20.875”	.750”	5/16-18	0.772 lb
9828	RT					22.375”	.750”	5/16-18	0.827 lb
9829	RT					23.875”	.750”	5/16-18	0.883 lb
9830	RT					25.375”	.750”	5/16-18	0.938 lb
9831	RT					26.875”	.750”	5/16-18	0.994 lb

Suggested Hardware (Mount to RT Profile)

Part No.	Series	Qty.	Bolt
3754	F	2	5/16-18 x 2.25” Flanged Hex Head Bolt

Connector Rod Profile

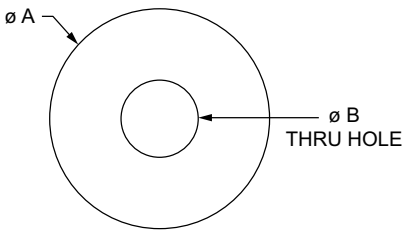

Part No.	Series	Material	Alloy	Process	Finish	A	B	Stock Length	Weight
9820	RT	Aluminum	6005A – T61	Extruded	Clear Anodize	.750”	.262”	150”	.037 lb / in.
9820-Black	RT				Black Anodize				

Required Machining Services

Machining Type	Machined	Reference Page
Connector Rod End Tap	Connector Rod Profile	10-25

Suggested Hardware (Mount to RT Profile)

Part No.	Series	Qty.	Bolt
3754	F	2	5/16-18 x 2.25” Flanged Hex Head Bolt
13-3947	M	2	M8 x 60mm BHSCS

Accessories

P-Tube Stopper

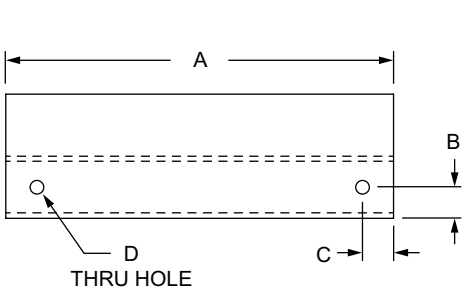

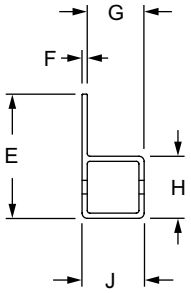

Part No.	Series	Material	Alloy	Process	Finish	A	B	C	D	E	F	G	H	J	Weight
9860	RT	Aluminum	6005A – T61	Machined	Clear Anodize	14.875"	.750"	.750"	.328"	3.000"	.125"	1.375"	1.500"	1.500"	1.197 lb
9861	RT					16.375"									1.317 lb
9862	RT					17.875"									1.436 lb
9863	RT					19.375"									1.556 lb
9864	RT					20.875"									1.676 lb
9865	RT					22.375"									1.795 lb
9866	RT					23.875"									1.915 lb
9867	RT					25.375"									2.035 lb
9868	RT					26.875"									2.155 lb

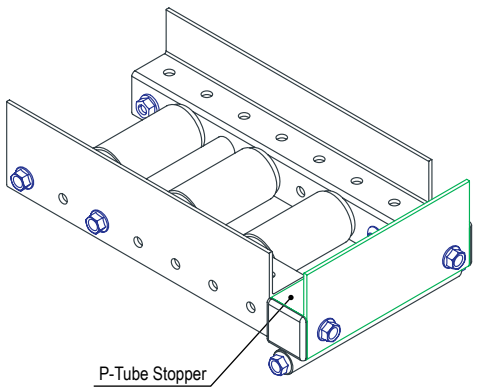

80/20 BUILD YOUR IDEA
More on 80/20® products available at 8020.net

Structural Shapes

Flat Stock Profile

Page 9-2

Block Profile

Page 9-3

Square/Rectangular Tube Profile
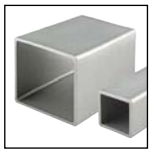
Page 9-4

Inside Corner Connector Profile
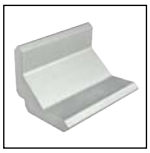
Page 9-4

Stanchion Profile

Page 9-5

Aluminum Tube Profile
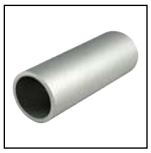
Page 9-5

Steel Tube

Page 9-6

Steel Solid Round

Page 9-6

Angle Profile

Page 9-7

45 Degree Gusset Profile
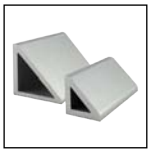
Page 9-9

Deadbolt Latch Profile

Page 9-9

Standard Nub Profile

Page 9-10

Right Angle Nub Profile

Page 9-11

Hinge Profile

Page 9-12

Roll-in Panel Mount Bracket Profile

Page 9-12

Panel Mount Block Profile

Page 9-13

Clamp Block Profile

Page 9-13

Single Flange Bearing Profile

Page 9-14

Double Flange Bearing Profile

Page 9-15

Single Flange UniBearing™ Profile

Page 9-16

Double Flange UniBearing™ Profile

Page 9-17

Single Retainer Profile

Page 9-18

Double Retainer Profile
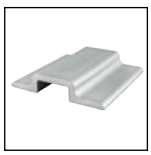
Page 9-18

Storage Bin Hanger Profile

Page 9-19

Tube Insert Profile

Page 9-19

Panel Stiffener Profile

Page 9-20

Cut-to-Length Any Structural Shape

All structural shapes can be cut-to-length. Machining service used is based on overall structural shape size. See page 10-2 for cut-to-length options.

Structural Shapes for Custom Parts

Structural shapes are commonly used for custom projects; if there's a unique flat plate, manifold, bearing, or bracket you need, we have the material in stock to make it for you.

From solid aluminum plates, deadbolt latches, angle profiles, or panel mount blocks, this wide selection of in-house shapes provides a quick turn time for your design.

80/20 also provides an in-house Custom Machining service to modify any of our structural shapes to fit your requirements. This gives you access to a high-precision, large capacity machine shop to customize your parts quickly and accurately.

Structural Shapes

Flat Stock Profile

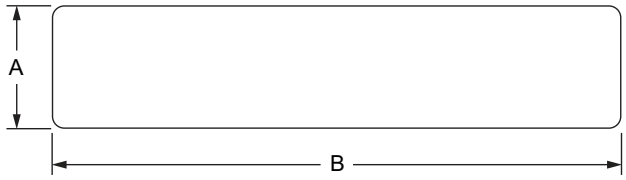

Part No.										
Clear Anodize*	Natural Mill	Black Anodize*	Full Length	Series	Material	Alloy**	Process	A	B	Weight
8303	8304	8304-Black	145"	F				.188"	.875"	.016 lb / in.
8317	8318	8318-Black	145"	F				.250"	.875"	.017 lb / in.
8307	8308	8308-Black	145"	F				.188"	1.000"	.018 lb / in.
8310	8311	8311-Black	145"	F				.250"	1.000"	.025 lb / in.
8315	8316	8316-Black	144"	F				.500"	1.000"	.049 lb / in.
8320	8321	8321-Black	145"	F				.250"	1.490"	.037 lb / in.
8322	8323	8323-Black	144"	F				.500"	1.500"	.073 lb / in.
8325	8326	8326-Black	145"	F				.750"	1.500"	.108 lb / in.
8330	8331	8331-Black	145"	F				.188"	2.000"	.037 lb / in.
8327	8328	8328-Black	144"	F				.500"	2.000"	.098 lb / in.
8337	8338	8338-Black	144"	F				.500"	2.500"	.122 lb / in.
8335	8336	8336-Black	145"	F				.188"	3.000"	.055 lb / in.
8340	8341	8341-Black	145"	F				.250"	3.000"	.074 lb / in.
8342	8343	8343-Black	145"	F				.500"	3.000"	.147 lb / in.
8345	8346	8346-Black	145"	F				.750"	3.000"	.221 lb / in.
8360	8361	8361-Black	145"	F				.188"	4.000"	.075 lb / in.
8365	8366	8366-Black	144"	F				.250"	4.000"	.095 lb / in.
8370	8371	8371-Black	145"	F				.750"	4.000"	.300 lb / in.
8375	8376	8376-Black	145"	F				.250"	4.500"	.114 lb / in.
8385	8386	8386-Black	145"	F	Aluminum	6005A – T61	Extruded	.250"	6.000"	.146 lb / in.
8390	8391	8391-Black	145"	F				.375"	6.000"	.221 lb / in.
25-8307	25-8308	25-8308-Black	4M	M				4.00mm	25.00mm	.0003 kg / mm
25-8310	25-8311	25-8311-Black	4M	M				6.00mm	25.00mm	.0004 kg / mm
25-8330	25-8331	25-8331-Black	4M	M				4.00mm	50.00mm	.0005 kg / mm
25-8327	25-8328	25-8328-Black	4M	M				12.00mm	50.00mm	.0016 kg / mm
25-8337	25-8338	25-8338-Black	4M	M				12.00mm	62.50mm	.0020 kg / mm
25-8335	25-8336	25-8336-Black	4M	M				4.00mm	75.00mm	.0013 kg / mm
25-8360	25-8361	25-8361-Black	4M	M				4.00mm	100.00mm	.0011 kg / mm
25-8370	25-8371	25-8371-Black	4M	M				19.00mm	100.00mm	.0051 kg / mm
40-8320	40-8321	40-8321-Black	4M	M				6.00mm	39.80mm	.0006 kg / mm
40-8322	40-8323	40-8323-Black	4M	M				12.00mm	40.00mm	.0013 kg / mm
40-8325	40-8326	40-8326-Black	4M	M				19.00mm	40.00mm	.0020 kg / mm
40-8340	40-8341	40-8341-Black	4M	M				6.00mm	80.00mm	.0013 kg / mm
40-8345	40-8346	40-8346-Black	4M	M				19.00mm	80.00mm	.0040 kg / mm
40-8375	40-8376	40-8376-Black	4M	M				6.00mm	120.00mm	.0019 kg / mm
40-8385	40-8386	40-8386-Black	4M	M				6.00mm	160.00mm	.0026 kg / mm
40-8390	40-8391	40-8391-Black	4M	M				9.00mm	160.00mm	.0025 kg / mm
45-8320	45-8321	45-8321-Black	4M	M				6.00mm	44.50mm	.0015 kg / mm
45-8340	45-8341	45-8341-Black	4M	M				6.00mm	90.00mm	.0032 kg / mm

* Longer lead times apply
** Or comparable

80/20 BUILD YOUR IDEA
More on 80/20® products available at 8020.net

Block Profile

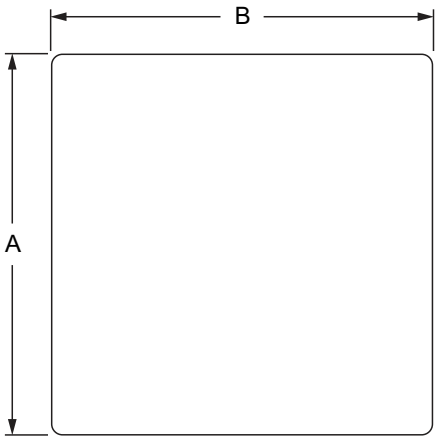

Part No.										
Clear Anodize*	Natural Mill	Black Anodize*	Full Length	Series	Material	Alloy**	Process	A	B	Weight
8313	8314	8314-Black	145"	F	Aluminum	6005A – T61	Extruded	1.125"	1.125"	.124 lb / in.
8305	8306	8306-Black	145"	F		6005A – T61		1.625	1.625	.259 lb / in.
8419	8319	8319-Black	144"	F		6061-T6		1.750"	1.750"	.259 lb / in.
8703	8704	8704-Black	72"	F		6005A – T61		2.060"	2.060"	.424 lb / in.
8394	8395	8395-Black	144"	F		6005A – T61		2.250"	2.250"	.496 lb / in.
8400	8401	8401-Black	72"	F		6005A – T61		2.560"	2.560"	.651 lb / in.
8720	8721	8721-Black	72"	F		6005A – T61		2.750"	2.750"	.741 lb / in.
8725	8724	8724-Black	72"	F		6061-T6		3.250"	3.250"	1.200 lb / in.
8722	8723	8723-Black	72"	F		6005A – T61		3.500"	3.500"	1.200 lb / in.
8710	8711	8711-Black	145"	F		6005A – T61		1.260"	2.060"	.259 lb / in.
8713	8714	8714-Black	145"	F		6005A – T61		1.510"	3.060"	.462 lb / in.
8420	8392	8392-Black	72"	F		6061-T6		2.500"	3.000"	.735 lb / in.
8408	8407	8407-Black	144"	F		6061-T6		1.500"	3.500"	.784 lb / in.
8405	8406	8406-Black	72"	F		6061-T6		2.000"	4.000"	.784 lb / in.
8422	8397	8397-Black	144"	F		6005A – T61		1.250"	4.500"	.551 lb / in.
8424	8399	8399-Black	72"	F		6061-T6		1.500"	6.000"	.882 lb / in.
8403	8402	8402-Black	72"	F		6061-T6		2.000"	7.000"	1.370 lb / in.

* Longer lead times apply

** Or comparable

Structural Shapes

Square/Rectangular Tube Profile

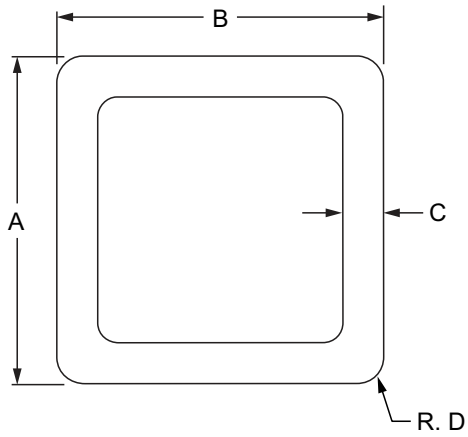

Part No.												
Clear Anodize*	Natural Mill	Black Anodize*	Full Length	Series	Material	Alloy**	Process	A	B	C	D	Weight
8110	8111	8111-Black	145"	F	Aluminum	6005A – T61	Extruded	1.000"	1.000"	.125"	.083"	.043 lb / in.
8115	8116	8116-Black	145"	F	Aluminum	6005A – T61	Extruded	1.500"	1.500"	.125"	.125"	.066 lb / in.
8120	8121	8121-Black	145"	F	Aluminum	6005A – T61	Extruded	1.500"	3.000"	.125"	.125"	.099 lb / in.
8125	8126	8126-Black	145"	F	Aluminum	6005A – T61	Extruded	3.000"	3.000"	.125"	.125"	.136 lb / in.

* Longer lead times apply
** Or comparable

Inside Corner Connector Profile

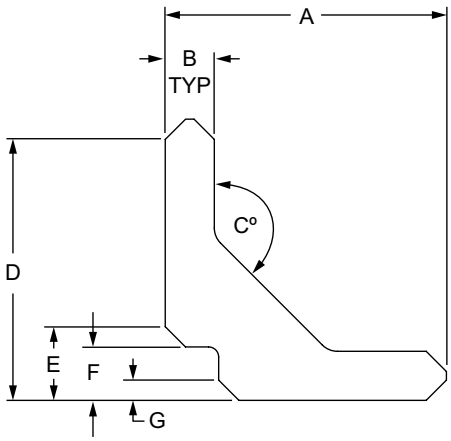

Part No.															
Clear*	Natural	Black*	Full Length	Series	Material	Alloy**	Process	A	B	C	D	E	F	G	Weight
8413	8414	8414-Black	145"	F	Aluminum	6005A – T61	Extruded	2.500"	.436"	135°	2.320"	.655"	.475"	.180"	.212 lb / in.

* Longer lead times apply
** Or comparable

80/20 BUILD YOUR IDEA
More on 80/20® products available at 8020.net

Stanchion Profile

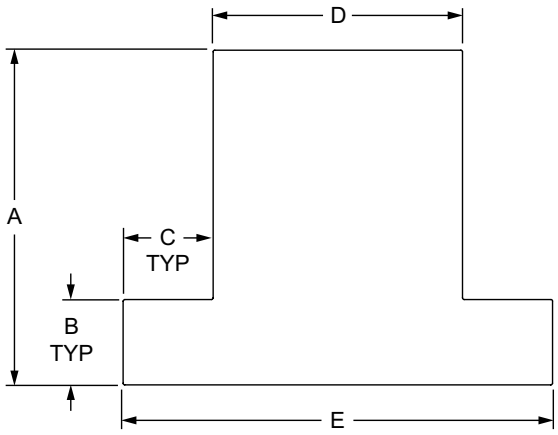

Part No.													
Clear*	Natural	Black*	Full Length	Series	Material	Alloy**	Process	A	B	C	D	E	Weight
8600	8601	8601-Black	72"	F	Aluminum	6005A – T61	Extruded	2.520"	.520"	.750"	1.500"	3.000"	.456 lb / in.
8605	8606	8606-Black	72"	F	Aluminum	6005A – T61	Extruded	3.020"	.770"	.812"	2.250"	3.874"	.804 lb / in.

* Longer lead times apply

** Or comparable

Aluminum Tube Profile

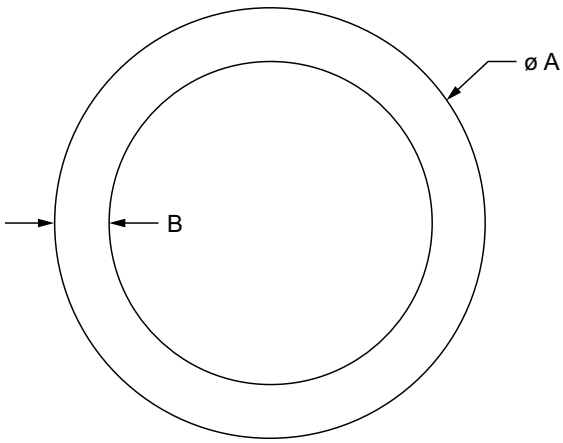

Part No.									
Clear Anodize	Natural Mill	Black Anodize*	Full Length	Series	Material	Alloy**	A	B	Weight
5035	5036	5036-Black	144"	F	Aluminum	6061-T6	1.000"	.125"	.034 lb / in.
5040	5041	5041-Black	144"	F	Aluminum	6061-T6	1.500"	.125"	.069 lb / in.
5045	5046	5046-Black	144"	F	Aluminum	6061-T6	2.000"	.125"	.100 lb / in.

* Longer lead times apply

** Or comparable

Structural Shapes

Steel Tube

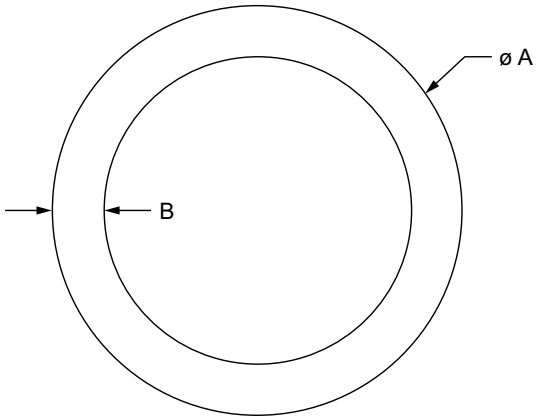

Part No.	Full Length	Series	Material	Grade	Finish	Process	Color	A	B	Weight
5005	145"	F	Carbon Steel	1020	Non-Plated	Drawn, Ground, and Polished	Unfinished	1.000"	.125"	.102 lb / in.
5015	145"	F	Carbon Steel	1020	Non-Plated	Drawn, Ground, and Polished	Unfinished	1.500"	.125"	.131 lb / in.
5025	145"	F	Carbon Steel	1020	Non-Plated	Drawn, Ground, and Polished	Unfinished	2.000"	.125"	.273 lb / in.

Steel Solid Round

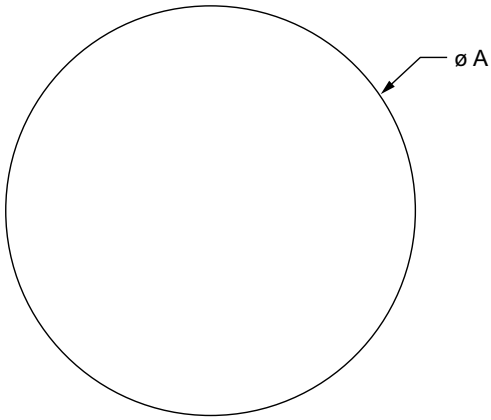

Part No.	Full Length	Series	Material	Grade	Finish	Process	Color	A	Weight
5010	145"	F	Carbon Steel	1045	Non-Plated	Drawn, Ground, and Polished	Unfinished	1.000"	.230 lb / in.
5020	145"	F	Carbon Steel	1045	Non-Plated	Drawn, Ground, and Polished	Unfinished	1.500"	.500 lb / in.
5030	145"	F	Carbon Steel	1045	Non-Plated	Drawn, Ground, and Polished	Unfinished	2.000"	.890 lb / in.

80/20® BUILD YOUR IDEA
More on 80/20® products available at 8020.net

Angle Profile

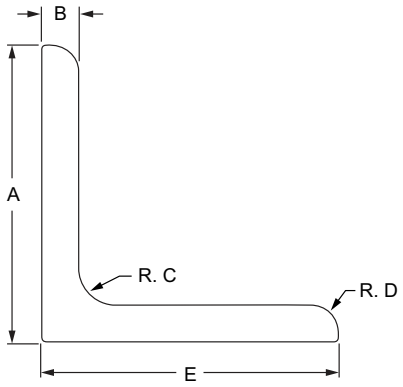

Part No.													
Clear Anodize*	Natural Mill	Black Anodize*	Full Length	Series	Material	Alloy**	Process	A	B	C	D	E	Weight
8210	8211	8211-Black	144"	F				1.000"	.125"	.125"	.093"	1.000"	.023 lb / in.
8217	8218	8218-Black	145"	F				1.000"	.188"	.125"	.188"	1.000"	.033 lb / in.
8212	8213	8213-Black	145"	F				2.000"	.188"	.125"	.188"	1.000"	.053 lb / in.
8215	8216	8216-Black	144"	F				1.500"	.188"	.125"	.188"	1.500"	.052 lb / in.
8220	8221	8221-Black	145"	F				1.500"	.250"	.312"	.250"	1.500"	.067 lb / in.
8230	8231	8231-Black	145"	F				3.000"	.250"	.312"	.250"	1.500"	.114 lb / in.
8222	8223	8223-Black	145"	F				2.000"	.188"	.125"	.188"	2.000"	.070 lb / in.
8225	8226	8226-Black	144"	F				2.500"	.188"	.125"	.188"	2.500"	.090 lb / in.
8232	8233	8233-Black	145"	F				3.000"	.188"	.125"	.188"	3.000"	.106 lb / in.
8235	8236	8236-Black	145"	F				3.000"	.250"	.312"	.250"	3.000"	.140 lb / in.
8240	8241	8241-Black	145"	F				4.500"	.250"	.312"	.250"	4.500"	.218 lb / in.
20-8210	20-8211	20-8211-Black	4M	M				20.00mm	3.00mm	2.00mm	2.00mm	20.00mm	.0007 kg / mm
20-8212	20-8213	20-8213-Black	4M	M	Aluminum	6005A – T61	Extruded	40.00mm	3.00mm	2.00mm	2.00mm	20.00mm	.0013 kg / mm
25-8210	25-8211	25-8211-Black	4M	M				25.00mm	3.00mm	3.00mm	3.00mm	25.00mm	.0004 kg / mm
25-8217	25-8218	25-8218-Black	4M	M				25.00mm	4.00mm	3.00mm	4.00mm	25.00mm	.0005 kg / mm
25-8212	25-8213	25-8213-Black	4M	M				50.00mm	4.00mm	3.00mm	4.00mm	25.00mm	.0007 kg / mm
25-8222	25-8223	25-8223-Black	4M	M				50.00mm	4.00mm	3.00mm	4.00mm	50.00mm	.0010 kg / mm
30-8220	30-8221	30-8221-Black	4M	M				30.00mm	4.00mm	3.50mm	3.50mm	30.00mm	.0013 kg / mm
30-8230	30-8231	30-8231-Black	4M	M				60.00mm	4.00mm	3.50mm	3.50mm	30.00mm	.0020 kg / mm
40-8220	40-8221	40-8221-Black	4M	M				40.00mm	6.00mm	8.00mm	6.00mm	40.00mm	.0012 kg / mm
40-8230	40-8231	40-8231-Black	4M	M				80.00mm	6.00mm	8.00mm	6.00mm	40.00mm	.0018 kg / mm
40-8235	40-8236	40-8236-Black	4M	M				80.00mm	6.00mm	8.00mm	6.00mm	80.00mm	.0025 kg / mm
45-8220	45-8221	45-8221-Black	4M	M				45.00mm	6.00mm	6.00mm	6.00mm	45.00mm	.0030 kg / mm
45-8230	45-8231	45-8231-Black	4M	M				90.00mm	6.00mm	6.00mm	6.00mm	45.00mm	.0047 kg / mm
45-8235	45-8236	45-8236-Black	4M	M				90.00mm	6.00mm	6.00mm	6.00mm	90.00mm	.0063 kg / mm

* Longer lead times apply
** Or comparable

Structural Shapes

Angle Profile (Continued)

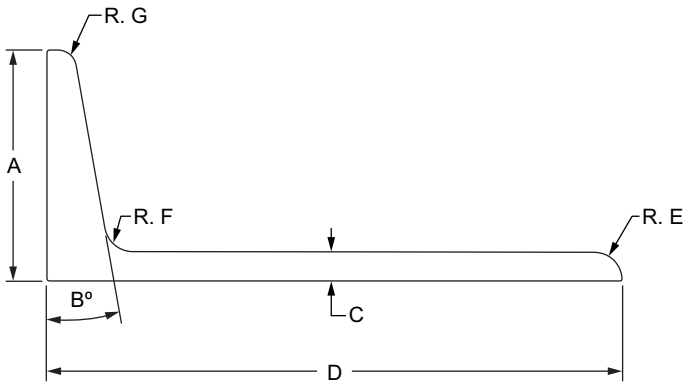

Part No.												
Clear*	Natural	Black*	Full Length	Series	A	B	C	D	E	F	G	Weight
8415	8416	8416-Black	145"	F	2.000"	10°	.250"	5.000"	.250"	.250"	.156"	.0083 lb / in.
65-8415	65-8416	65-8416-Black	4M	M	56.00mm	10°	6.00mm	140.00mm	6.00mm	6.00mm	4.00mm	.0038 kg / mm

* Longer lead times apply

Material Specifications

Part No.	Material	Alloy**	Finish	Process
8415	Aluminum	6005A – T61	Clear Anodize	Extruded
8416			Mill	
8416-Black			Black Anodize	
65-8415			Clear Anodize	
65-8416			Mill	
65-8416-Black			Black Anodize	

** Or comparable

80/20 BUILD YOUR IDEA
More on 80/20® products available at 8020.net

45 Degree Gusset Profile

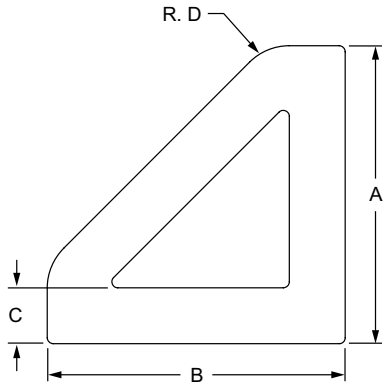

Part No.												
Clear Anodize*	Natural Mill	Black Anodize*	Full Length	Series	Material	Alloy**	Process	A	B	C	D	Weight
8620	8621	8621-Black	145"	F	Aluminum	6005A – T61	Extruded	1.000"	1.000"	.188"	.188"	.052 lb / in.
8630	8631	8631-Black	145"	F				1.500"	1.500"	.250"	.250"	.106 lb / in.
8625	8626	8626-Black	145"	F				2.000"	2.000"	.188"	.188"	.116 lb / in.
8635	8636	8636-Black	145"	F				3.000"	3.000"	.250"	.250"	.234 lb / in.
25-8620	25-8621	25-8621-Black	4M	M				25.00mm	25.00mm	4.00mm	4.00mm	.0008 kg / mm
25-8625	25-8626	25-8626-Black	4M	M				50.00mm	50.00mm	4.00mm	4.00mm	.0017 kg / mm
30-8630	30-8631	30-8631-Black	4M	M				30.00mm	30.00mm	4.00mm	4.00mm	.0021 kg / mm
30-8635	30-8636	30-8636-Black	4M	M				60.00mm	60.00mm	4.00mm	4.00mm	.0046 kg / mm
40-8630	40-8631	40-8631-Black	4M	M				40.00mm	40.00mm	6.00mm	6.00mm	.0019 kg / mm
40-8635	40-8636	40-8636-Black	4M	M				80.00mm	80.00mm	6.00mm	6.00mm	.0040 kg / mm
45-8630	45-8631	45-8631-Black	4M	M				45.00mm	45.00mm	6.00mm	6.00mm	.0047 kg / mm
45-8635	45-8636	45-8636-Black	4M	M				90.00mm	90.00mm	6.00mm	6.00mm	.0102 kg / mm

* Longer lead times apply
** Or comparable

Deadbolt Latch Profile

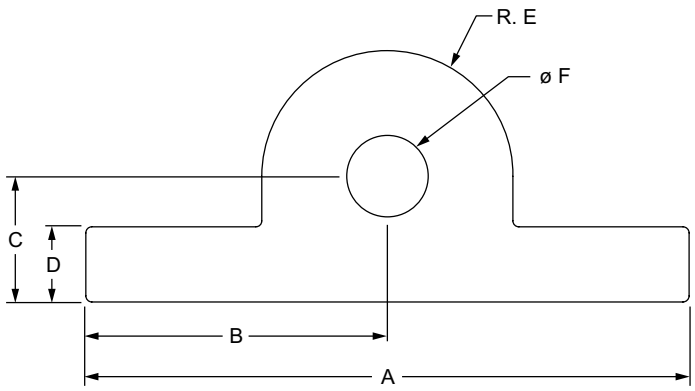

Part No.														
Clear*	Natural	Black*	Full Length	Series	Material	Alloy**	Process	A	B	C	D	E	F	Weight
8560	8561	8561-Black	145"	F	Aluminum	6005A – T61	Extruded	1.500"	.750"	.313"	.187"	.312"	.201"	.048 lb / in.

* Longer lead times apply
** Or comparable

Structural Shapes

Standard Nub Profile

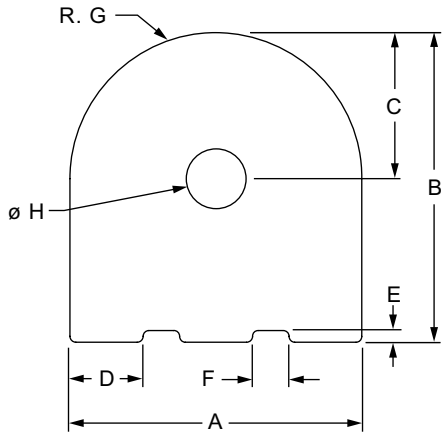

Part No.													
Clear*	Natural	Black*	Full Length	Series	A	B	C	D	E	F	G	H	Weight
8547	8548	8548-Black	145"	F	1.000"	1.060"	.500"	.250"	.040"	.125"	.500"	.205"	.091 lb / in.
8545	8546	8546-Black	145"	F	1.500"	1.600"	.750"	.314"	.080"	.279"	.750"	.265"	.205 lb / in.
25-8547	25-8548	25-8548-Black	4M	M	25.00mm	27.00mm	12.50mm	6.40mm	2.00mm	2.90mm	12.50mm	5.00mm	.0016 kg / mm
40-8545	40-8546	40-8546-Black	4M	M	40.00mm	42.50mm	20.00mm	8.00mm	2.13mm	8.00mm	20.00mm	6.60mm	.0039 kg / mm

* Longer lead times apply

Material Specifications

Part No.	Material	Alloy**	Finish	Process
8547	Aluminum	6005A – T61	Anodize	Extruded
8548			Mill	
8548-Black			Anodize	
8545			Anodize	
8546			Mill	
8546-Black			Anodize	
25-8547			Anodize	
25-8548			Mill	
25-8548-Black			Anodize	
40-8545			Anodize	
40-8546			Mill	
40-8546-Black			Anodize	

** Or comparable

80/20 BUILD YOUR IDEA
More on 80/20® products available at 8020.net

Right Angle Nub Profile

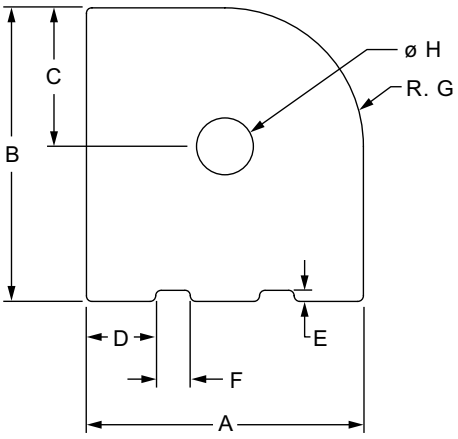

Part No.													
Clear*	Natural	Black*	Full Length	Series	A	B	C	D	E	F	G	H	Weight
8445	8446	8446-Black	145"	F	1.000"	1.060"	.500"	.250"	.040"	.125"	.500"	.205"	.096 lb / in.
8448	8449	8449-Black	145"	F	1.500"	1.600"	.750"	.314"	.080"	.279"	.750"	.265"	.218 lb / in.
25-8445	25-8446	25-8446-Black	4M	M	25.00mm	27.00mm	12.50mm	6.40mm	1.10mm	2.90mm	12.50mm	5.00mm	.0017 kg / mm
40-8448	40-8449	40-8449-Black	4M	M	40.00mm	42.50mm	20.00mm	8.00mm	2.13mm	8.00mm	20.00mm	6.80mm	.0041 kg / mm

* Longer lead times apply

Material Specifications

Part No.	Material	Alloy**	Finish	Process
8445	Aluminum	6005A – T61	Anodize	Extruded
8446			Mill	
8446-Black			Anodize	
8448			Anodize	
8449			Mill	
8449-Black			Anodize	
25-8445			Anodize	
25-8446			Mill	
25-8446-Black			Anodize	
40-8448			Anodize	
40-8449			Mill	
40-8449-Black			Anodize	

** Or comparable

Structural Shapes

Hinge Profile

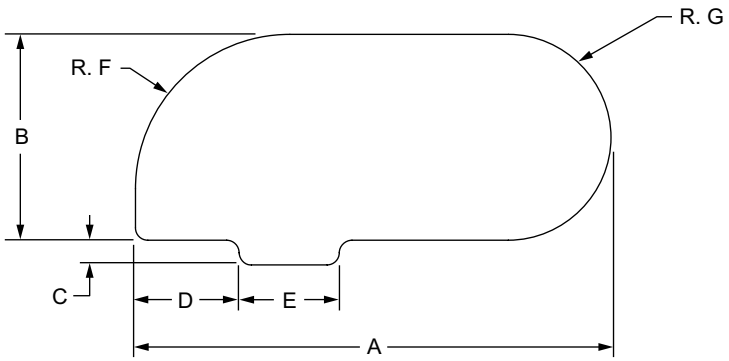

Part No.															
Clear*	Natural	Black*	Full Length	Series	Material	Alloy**	Process	A	B	C	D	E	F	G	Weight
8550	8551	8551-Black	145"	F	Aluminum	6005A – T61	Extruded	1.156"	.500"	.060"	.252"	.244"	.375"	.250"	.048 lb / in.
8555	8556	8556-Black	145"	F	Aluminum	6005A – T61	Extruded	1.655"	.500"	.100"	.469"	.309"	.375"	.250"	.075 lb / in.
25-8550	25-8551	25-8551-Black	4M	M	Aluminum	6005A – T61	Extruded	29.00mm	13.00mm	1.50mm	6.35mm	6.20mm	9.35mm	6.50mm	.0009 kg / mm
40-8555	40-8556	40-8556-Black	4M	M	Aluminum	6005A – T61	Extruded	43.94mm	13.00mm	2.60mm	12.90mm	7.85mm	9.50mm	6.50mm	.0014 kg / mm

* Longer lead times apply
** Or comparable

Roll-In Panel Mount Bracket Profile

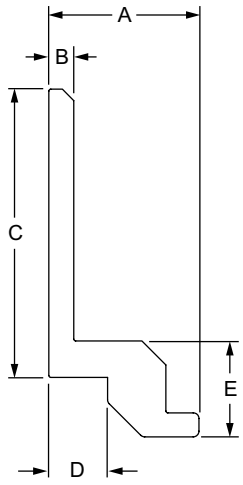

Part No.													
Clear*	Natural	Black*	Full Length	Series	Material	Alloy**	Process	A	B	C	D	E	Weight
8592	8591	8591-Black	145"	F M	Aluminum	6005A – T61	Extruded	.573"	.130"	1.000"	.217"	.335"	.022 lb / in.
8594	8593	8593-Black	145"	F M	Aluminum	6005A – T61	Extruded	.782"	.130"	1.500"	.306"	.500"	.050 lb / in.

* Longer lead times apply
** Or comparable

80/20 BUILD YOUR IDEA
More on 80/20® products available at 8020.net

Panel Mount Block Profile

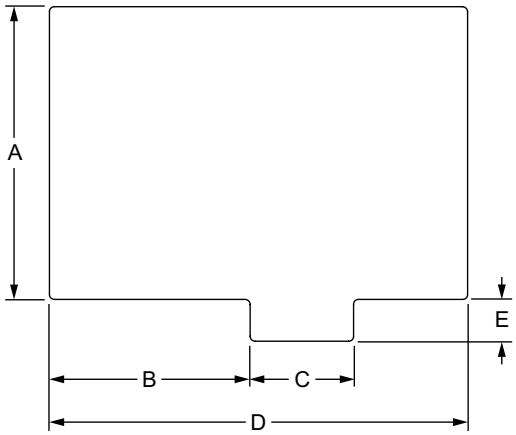

Part No.													
Clear*	Natural	Black*	Full Length	Series	Material	Alloy**	Process	A	B	C	D	E	Weight
8567	8568	8568-Black	145"	F	Aluminum	6005A – T61	Extruded	.700"	.370"	.250"	.812"	.050"	.058 lb / in.
8565	8566	8566-Black	145"	F	Aluminum	6005A – T61	Extruded	.875"	.600"	.309"	1.250"	.125"	.113 lb / in.
25-8567	25-8568	25-8568-Black	4M	M	Aluminum	6005A – T61	Extruded	19.00mm	9.30mm	6.30mm	20.32mm	1.30mm	.0011 kg / mm
40-8565	40-8566	40-8566-Black	4M	M	Aluminum	6005A – T61	Extruded	23.20mm	16.21mm	7.87mm	34.28mm	3.30mm	.0022 kg / mm

* Longer lead times apply
** Or comparable

Clamp Block Profile

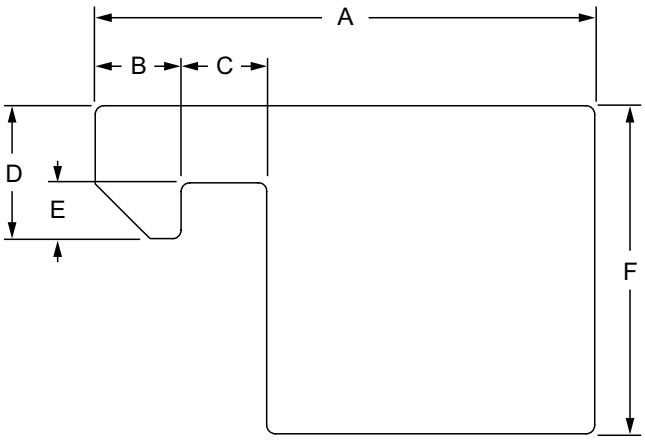

Part No.														
Clear*	Natural	Black*	Full Length	Series	Material	Alloy**	Process	A	B	C	D	E	F	Weight
8418	8417	8417-Black	145"	10	Aluminum	6005A – T61	Extruded	.710"	.100"	.110"	.215"	.075"	.500"	.017 lb / in.
8426	8427	8427-Black	145"	15	Aluminum	6005A – T61	Extruded	1.142"	.196"	.196"	.304"	.128"	.750"	.029 lb / in.

* Longer lead times apply
** Or comparable

Structural Shapes

Single Flange Bearing Profile

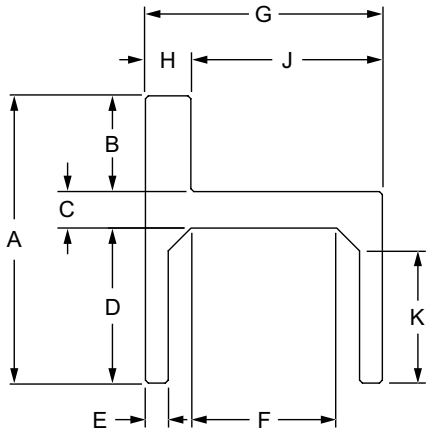

Part No.															
Clear*	Natural	Black*	Full Length	Series	A	B	C	D	E	F	G	H	J	K	Weight
8520	8521	8521-Black	145"	10	1.968"	.656"	.250"	1.062"	.156"	1.000"	1.624"	.311"	1.313"	.906"	.093 lb / in.
8530	8531	8531-Black	145"	15	2.750"	.750"	.375"	1.625"	.250"	1.379"	2.505"	.500"	2.005"	1.312"	.222 lb / in.
25-8520	25-8521	25-8521-Black	4M	25	49.73mm	16.48mm	5.99mm	27.25mm	3.99mm	25.22mm	41.12mm	7.98mm	33.14mm	23.29mm	.0016 kg / mm
40-8530	40-8531	40-8531-Black	4M	40	71.83mm	19.00mm	8.99mm	43.84mm	6.15mm	36.98mm	65.13mm	11.99mm	53.14mm	35.92mm	.0038 kg / mm

* Longer lead times apply

Material Specifications

Part No.	Material	Alloy**	Finish	Process
8520	Aluminum	6005A – T61	Anodize	Extruded
8521			Mill	
8521-Black			Anodize	
8530			Anodize	
8531			Mill	
8531-Black			Anodize	
25-8520			Anodize	
25-8521			Mill	
25-8521-Black			Anodize	
40-8530			Anodize	
40-8531			Mill	
40-8531-Black			Anodize	

** Or comparable

80/20 BUILD YOUR IDEA
More on 80/20® products available at 8020.net

Double Flange Bearing Profile

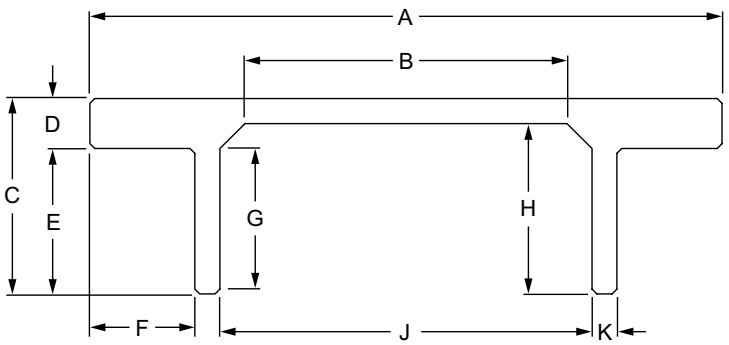

Part No.															
Clear*	Natural	Black*	Full Length	Series	A	B	C	D	E	F	G	H	J	K	Weight
8525	8526	8526-Black	145"	10	2.936"	1.000"	1.218"	.312"	.906"	.656"	.886"	1.062"	1.312"	.156"	.098 lb / in.
8527	8528	8528-Black	145"	10	3.938"	2.006"	1.218"	.312"	.906"	.654"	.876"	1.062"	2.318"	.156"	.117 lb / in.
8535	8536	8536-Black	145"	15	4.001"	1.379"	1.875"	.375"	1.500"	.748"	1.282"	1.625"	2.005"	.250"	.209 lb / in.
8540	8541	8541-Black	145"	15	5.501"	2.878"	1.875"	.375"	1.500"	.748"	1.282"	1.625"	3.504"	.250"	.247 lb / in.
25-8525	25-8526	25-8526-Black	4M	25	74.09mm	25.15mm	31.20mm	8.00mm	23.20mm	16.47mm	22.44mm	27.20mm	33.15mm	4.00mm	.0018 kg / mm
25-8527	25-8528	25-8528-Black	4M	25	99.26mm	50.34mm	31.20mm	8.00mm	23.20mm	16.47mm	22.44mm	27.20mm	58.32mm	4.00mm	.0020 kg / mm
40-8535	40-8536	40-8536-Black	4M	40	103.12mm	36.82mm	50.00mm	9.00mm	41.00mm	19.00mm	35.08mm	43.84mm	52.82mm	6.15mm	.0036 kg / mm
40-8540	40-8541	40-8541-Black	4M	40	143.31mm	77.01mm	50.00mm	9.00mm	41.00mm	19.00mm	35.08mm	43.84mm	93.01mm	6.15mm	.0042 kg / mm
45-8536	45-8537	45-8537-Black	4M	45	120.00mm	40.00mm	56.40mm	9.50mm	46.90mm	24.78mm	40.48mm	49.30mm	57.64mm	6.40mm	.0046 kg / mm

* Longer lead times apply

Material Specifications

Part No.	Material	Alloy**	Finish	Process
8525	Aluminum	6005A-T61	Anodize	Extruded
8526			Mill	
8526-Black			Anodize	
8527			Anodize	
8528			Mill	
8528-Black			Anodize	
8535			Anodize	
8536			Mill	
8536-Black			Anodize	
8540			Anodize	
8541			Mill	
8541-Black			Anodize	
25-8525			Anodize	
25-8526			Mill	

** Or comparable

Part No.	Material	Alloy**	Finish	Process
25-8526-Black	Aluminum	6005A-T61	Anodize	Extruded
25-8527			Anodize	
25-8526			Mill	
25-8528-Black			Anodize	
40-8535			Anodize	
40-8536			Mill	
40-8536-Black			Anodize	
40-8540			Anodize	
40-8541			Mill	
40-8541-Black			Anodize	
45-8536			Anodize	
45-8537			Mill	
45-8537-Black			Anodize	

** Or comparable

Structural Shapes

Single Flange UniBearing™ Profile

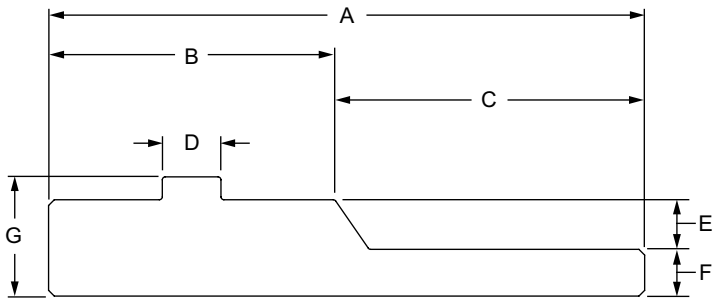

Part No.												
Clear*	Natural	Black*	Full Length	Series	A	B	C	D	E	F	G	Weight
8580	8581	8581-Black	145"	F	2.063"	1.000"	1.063"	.244"	.156"	.156"	.372"	.050 lb / in.
8582	8583	8583-Black	145"	F	3.125"	1.500"	1.625"	.308"	.260"	.245"	.625"	.122 lb / in.
25-8580	25-8581	25-8581-Black	3.683M	M	52.40mm	25.40mm	27.00mm	6.20mm	3.96mm	3.96mm	9.45mm	.0009 kg / mm
40-8582	40-8583	40-8583-Black	4M	M	82.45mm	38.10mm	41.28mm	7.82mm	6.60mm	6.22mm	15.88mm	.0021 kg / mm

* Longer lead times apply

Material Specifications

Part No.	Material	Alloy**	Finish	Process
8580	Aluminum	6005A – T61	Anodize	Extruded
8581			Mill	
8581-Black			Anodize	
8582			Anodize	
8583			Mill	
8583-Black			Anodize	
25-8580			Anodize	
25-8581			Mill	
25-8581-Black			Anodize	
40-8582			Anodize	
40-8583			Mill	
40-8583-Black			Anodize	

** Or comparable

80/20 BUILD YOUR IDEA
More on 80/20® products available at 8020.net

Double Flange UniBearing™ Profile

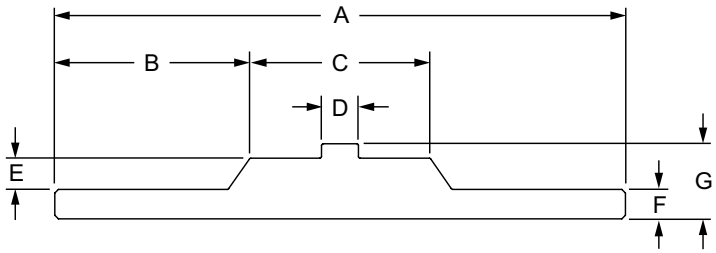

Part No.												
Clear*	Natural	Black*	Full Length	Series	A	B	C	D	E	F	G	Weight
8584	8585	8585-Black	145"	F	3.125"	1.063"	.998"	.244"	.156"	.156"	.372"	.068 lb / in.
8586	8587	8587-Black	145"	F	4.750"	1.625"	1.493"	.308"	.260"	.245"	.625"	.164 lb / in.
25-8584	25-8585	25-8585-Black	3.683M	M	79.38mm	27.00mm	25.35mm	6.20mm	4.00mm	4.00mm	9.45mm	.0012 kg / mm
40-8586	40-8587	40-8587-Black	4M	M	124.78mm	41.28mm	37.92mm	7.82mm	6.60mm	6.22mm	15.88mm	.0065 kg / mm

* Longer lead times apply

Material Specifications

Part No.	Material	Alloy**	Finish	Process
8584	Aluminum	6005A – T61	Anodize	Extruded
8585			Mill	
8585-Black			Anodize	
8586			Anodize	
8587			Mill	
8587-Black			Anodize	
25-8584			Anodize	
25-8585			Mill	
25-8585-Black			Anodize	
40-8586			Anodize	
40-8587			Mill	
40-8587-Black			Anodize	

** Or comparable

Structural Shapes

Single Retainer Profile

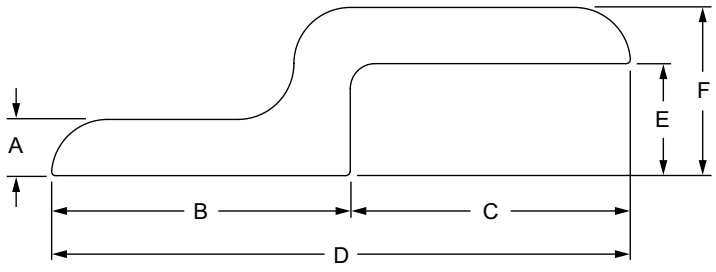

Part No.														
Clear*	Natural	Black*	Full Length	Series	Material	Alloy**	Process	A	B	C	D	E	F	Weight
8515	8516	8516-Black	145"	F	Aluminum	6005A – T61	Extruded	.188"	1.000"	.938"	1.938"	.375"	.563"	.042 lb / in.
8510	8511	8511-Black	145"	F	Aluminum	6005A – T61	Extruded	.250"	1.500"	1.379"	2.879"	.590"	.840"	.093 lb / in.
20-8515	20-8516	20-8516-Black	4M	M	Aluminum	6005A – T61	Extruded	3.00mm	20.00mm	19.00mm	39.00mm	7.19mm	10.19mm	.0008 kg / mm
25-8515	25-8516	25-8516-Black	4M	M	Aluminum	6005A – T61	Extruded	4.00mm	25.00mm	23.50mm	48.50mm	9.30mm	13.30mm	.0010 kg / mm
30-8515	30-8516	30-8516-Black	4M	M	Aluminum	6005A – T61	Extruded	4.00mm	30.00mm	28.00mm	58.00mm	10.59mm	14.58mm	.0016 kg / mm
40-8510	40-8511	40-8511-Black	4M	M	Aluminum	6005A – T61	Extruded	6.00mm	40.00mm	37.00mm	77.00mm	15.95mm	21.95mm	.0030 kg / mm
45-8510	45-8511	45-8511-Black	4M	M	Aluminum	6005A – T61	Extruded	6.00mm	45.00mm	41.98mm	86.98mm	17.29mm	23.29mm	.0036 kg / mm

* Longer lead times apply
** Or comparable

Double Retainer Profile

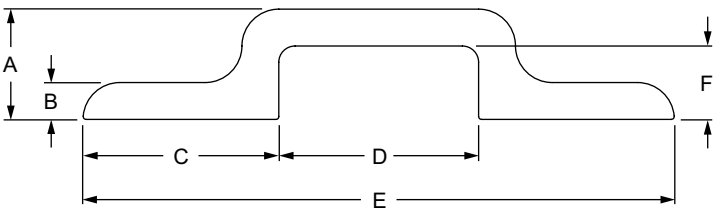

Part No.														
Clear*	Natural	Black*	Full Length	Series	Material	Alloy**	Process	A	B	C	D	E	F	Weight
8610	8611	8611-Black	145"	F	Aluminum	6005A – T61	Extruded	.563"	.188"	1.000"	1.020"	3.020"	.375"	.100 lb / in.
8512	8513	8513-Black	145"	F	Aluminum	6005A – T61	Extruded	.840"	.250"	1.500"	1.523"	4.523"	.590"	.142 lb / in.
25-8610	25-8611	25-8611-Black	4M	M	Aluminum	6005A – T61	Extruded	13.30mm	4.00mm	25.00mm	25.50mm	75.50mm	9.30mm	.0020 kg / mm
40-8512	40-8513	40-8513-Black	4M	M	Aluminum	6005A – T61	Extruded	21.95mm	6.00mm	40.00mm	40.59mm	120.59mm	15.95mm	.0060 kg / mm

* Longer lead times apply
** Or comparable

80/20 BUILD YOUR IDEA
More on 80/20® products available at 8020.net

Storage Bin Hanger Profile

- Used to hang storage bins (pg. 8-32)
- Available in stock lengths with hardware (pg. 8-32)

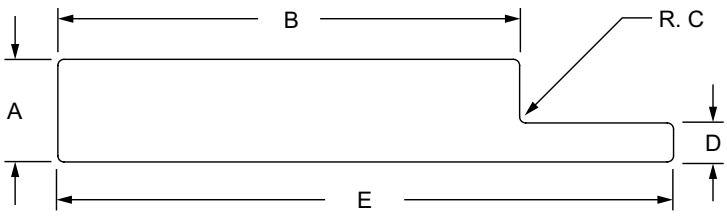

Part No.													
Clear*	Natural	Black*	Full Length	Series	Material	Alloy**	Process	A	B	C	D	E	Weight
8507	8508	8508-Black	145"	F M	Aluminum	6005A – T61	Extruded	.250"	1.125"	.015"	.095"	1.500"	.030 lb / in.

* Longer lead times apply
** Or comparable

Tube Insert Profile

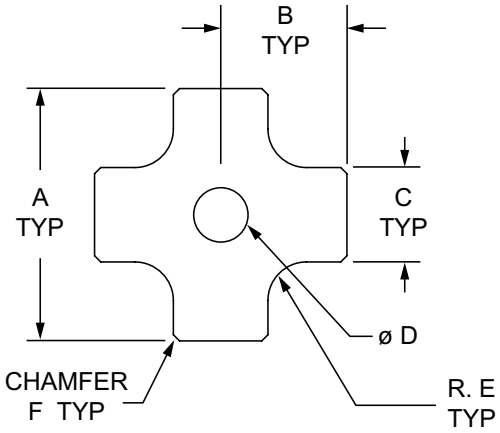

Part No.	Full Length	Series	Material	Alloy**	Finish	Process	A	B	C	D	E	F	Weight
9750	145"	RT	Aluminum	6005A – T61	Clear Anodize	Extruded	1.225"	.612"	.459"	.262"	.187"	.030" X 45°	.068 lb / in.

** Or comparable

Structural Shapes

Panel Stiffener Profile

- Used to add rigidity to .236" (6mm) thick panels
- Available in stock length (pg. 4-136) of 72.5 inches (1841.5mm)
- Connects using soft face mallet (pg. 11-6)

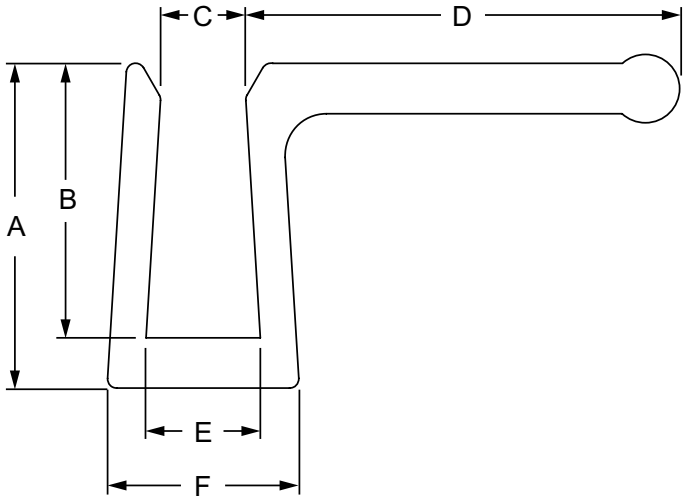

Part No.														
Clear Anodize	Black Anodize*	Handle	Full Length	Series	Material	Alloy**	Process	A	B	C	D	E	F	Weight
8570	8570-Black	Yes	145"	F	Aluminum	6005A – T61	Extruded	.710"	.600"	.182"	.953"	.245"	.420"	.025 lb / in.
8575	8575-Black	No	145"	F	Aluminum	6005A – T61	Extruded	.710"	.600"	.182"	—	.245"	.417"	.014 lb / in.
65-8570	65-8570-Black	Yes	3.68M	M	Aluminum	6005A – T61	Extruded	18.03mm	15.24mm	4.62mm	24.21mm	6.22mm	10.67mm	.0004 kg / mm
65-8575	65-8575-Black	No	3.68M	M	Aluminum	6005A – T61	Extruded	18.03mm	15.24mm	4.62mm	—	6.22mm	10.59mm	.0003 kg / mm

* Longer lead times apply

** Or comparable

80/20 BUILD YOUR IDEA
More on 80/20® products available at 8020.net

T-Slot Profile Cut to Length

Page 10-2

RT & QF Profile Cut to Length

Page 10-2

Shaped Profile Cut to Length

Page 10-2

Tap Profile End

Page 10-3

Access Hole

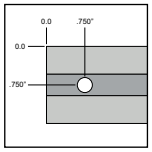

Page 10-5

Anchor Fastener Counterbore

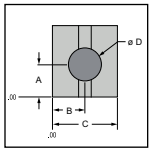

Page 10-7

Butt Fastener Counterbore

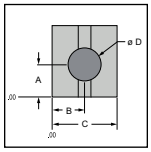

Page 10-7

Drill Thru & Counterbore

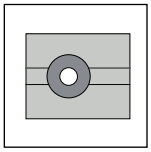

Page 10-8

Profile Miter Cut

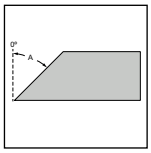

Page 10-10

Profile Miter Cut Worksheet

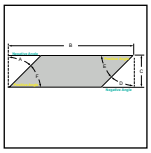

Page 10-11

Miter Cut Counterbore

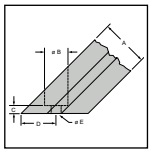

Page 10-12

Profile Miter Cut with Counterbore

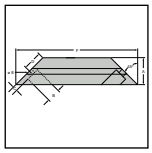

Page 10-13

Clearance Drill Thru in T-Slot

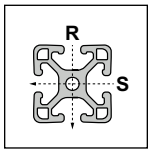

Page 10-14

Clearance Drill Thru Between T-Slots

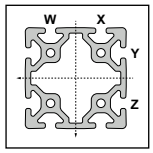

Page 10-15

Deluxe Door Handle Profile Milling

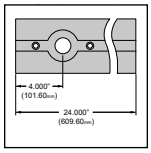

Page 10-16

Furniture Style Door Handle Profile Milling

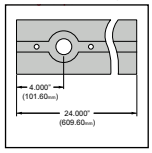

Page 10-17

Miter Connector Profile Milling

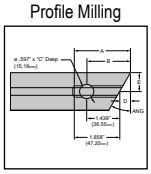

Page 10-18

T-Nut Clearance Profile Milling

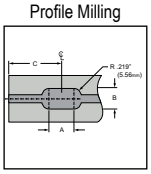

Page 10-19

Central Connector Profile Milling

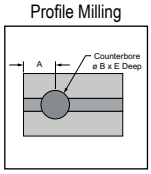

Page 10-20

Manifold Access Profile Milling

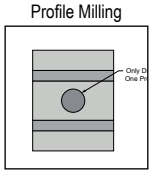

Page 10-21

Bolt Connector Profile Milling

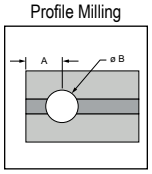

Page 10-22

Brake Holes for Linear Bearings

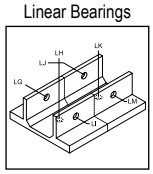

Page 10-23

45 Degree Flange Milling

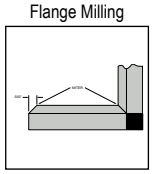

Page 10-25

Connector Rod End Tap

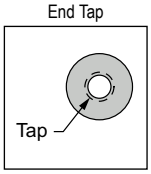

Page 10-25

Panel Cut-to-Size

Page 10-26

T-Slot Access Routing

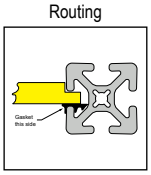

Page 10-26

Edge Radius

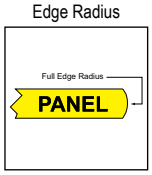

Page 10-27

Corner Radius

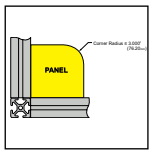

Page 10-27

Profile Corner Clearance Notch

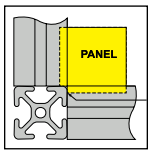

Page 10-28

Full Profile Corner Clearance Notch

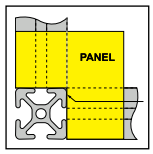

Page 10-29

End Fastener Clearance Notch

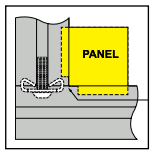

Page 10-30

Anchor Fastener Clearance Notch

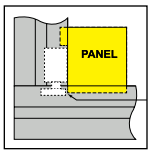

Page 10-31

Central Connector Clearance Notch

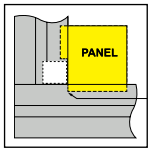

Page 10-32

Corner Connector Clearance Notch

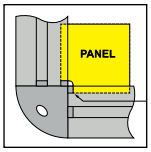

Page 10-33

Inside Corner Connector Clearance Notch

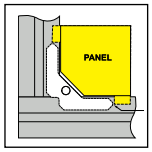

Page 10-34

Hidden Corner Connector Clearance Notch

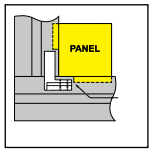

Page 10-35

Bolt Connector Clearance Notch

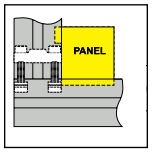

Page 10-36

Plate Connector Clearance Notch

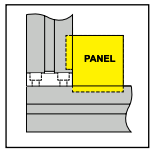

Page 10-36

Grabber™ Door Catch Panel Milling

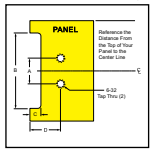

Page 10-37

Locking Grabber™ Handle Panel Milling

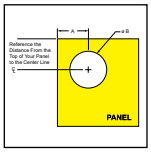

Page 10-37

Flush Handle Panel Milling

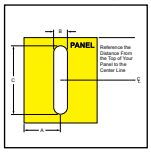

Page 10-38

Adjustable Tension and Detent Hinge Panel Milling

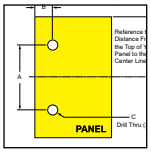

Page 10-39

Plastic / Steel Door Handle Panel Milling

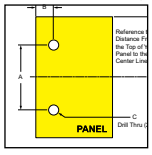

Page 10-40

Panel Mount Block Panel Milling

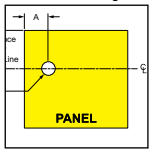

Page 10-41

Panel Retainer Milling

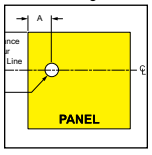

Page 10-42

Plastic Panel / Aluminum Plate Cutout

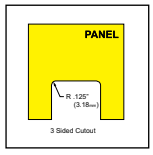

Page 10-43

Top Mount Milling for Plastic Panel or Aluminum Plate

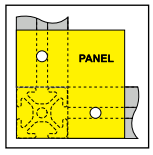

Page 10-44

Miscellaneous Panel Milling

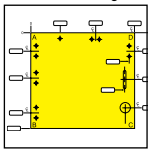

Page 10-45

Machining Services

T-Slot Profile Cut to Length

Part No.	Series	Applicable Profiles	Cut Squareness	Cut Tolerance
7005	10	1001, 1001-S, 1002, 1002-S, 1003, 1003-S, 1004, 1004-S, 1010, 1010-S, 1012, 1012-S, 1050	+/- .002" / in	+/- .015"
7000	10	1020, 1020-S, 2012		
7003	10	1030, 1030-S		
7012	10	2020, 2020-S		
7013	10	2040, 2040-S		
7010	15	1501, 1501-LS, 1502, 1502-LS, 1503, 1503-LS, 1504, 1504-LS, 1515, 1515-S, 1515-Lite, 1515-LS, 1515-UL, 1515-ULS, 1517, 1517-LS, 1534-Lite, 1547, 1575		
7020	15	1530, 1530-Lite, 1530-LS, 1530-S, 1530-UL, 1530-ULS, 3034-Lite, 3075		
7021	15	1545, 1545-S, 1545-LS		
7030	15	3030, 3030-Lite, 3030-LS, 3030-S		
7023	15	3060		
20-7005	20	20-2020	+/- .02mm / cm	+/- .38mm
20-7020	20	20-2040		
20-7030	20	20-4040		
25-7005	25	25-2525, 25-2501, 25-2502, 25-2503, 25-2504, 25-2527, 25-2514		
25-7000	25	25-2550, 25-5013		
25-7003	25	25-2576		
25-7012	25	25-5050		
25-7013	25	25-5010		
30-7010	30	30-3001, 30-3002, 30-3003, 30-3004, 30-3030, 30-3022		
30-7020	30	30-3060		
30-7030	30	30-6060		
40-7010	40	40-4001, 40-4002, 40-4003, 40-4004, 40-4040-UL, 40-4040-Lite, 40-4040, 40-4020, 40-4030-Lite, 40-4045-Lite		
40-7020	40	40-4080-UL, 40-4080-Lite, 40-4080, 40-8020, 40-4082-Lite, 40-4083-Lite, 40-4084-Lite, 40-4085-Lite, 40-4093, 40-4094, 40-4096		
40-7021	40	40-4012		
40-7030	40	40-8080		
40-7023	40	40-8016		
45-7010	45	45-4545, 45-4545-Lite		
45-7020	45	45-4590		
45-7030	45	45-9090		

Ready Tube® & Quick Frame® Profile Cut to Length

Part No.	Series	Applicable Profiles	Cut Squareness	Cut Tolerance
7010	RT	9700, 9701	+/- .002" / in	+/- .015"
7020	RT	9705, 9706, 9725, 9726, 9728		
7310	15 40 QF	2119, 40-2119, 9000, 9005, 9010, 9015, 9025, 9030, 9035		

Shaped Profile Cut to Length

Part No.	Series	Service Type	Cut Squareness	Cut Tolerance
7001	F RT	Cut to Length .750" Round Connector Rod	+/- .002" / in	+/- .015"
7205	F	Cut to Length 1.00" Round Tube		
7210	F	Cut to Length 1.50" Round Tube		
7213	F	Cut to Length 2.00" Round Tube		
7212	F	Cut to Length Shapes with **ALL** Profile Sides < 3.250" / T-slot Cover / Gravity Roller Tube		
7224	F	Cut to Length Shapes with **ANY** Profile Side ≥ 3.250"		
65-7212	M	Cut to Length Shapes with **ALL** Profile Sides < 82mm	+/- .02mm / cm	+/- .38mm
65-7224	M	Cut to Length Shapes with **ANY** Profile Side ≥ 82mm		

80/20 BUILD YOUR IDEA
More on 80/20® products available at 8020.net

Tap Profile End

- Used to add threads to extruded holes in T-slot profile
- When ordering, designate profile end (left, right, or both) that requires tap

Part No.	Series	Tap Size	Minimum Depth	Service Type	Applicable Profiles
7061	10	1/4-20	1.125"	Single Hole End Tap	1001, 1001-S, 1002, 1002-S, 1003, 1003-S, 1004, 1004-S, 1010, 1010-S, 1012, 1012-S
7063	10	M6 x 1.00	1.125"	Single Hole End Tap	
7006	10	10-32	.875"	Two Hole End Tap	1050
7007	10	M5 x .80	.875"	Two Hole End Tap	
7008	10	10-32	.875"	Two Hole End Tap	2012
7009	10	M5 x .80	.875"	Two Hole End Tap	
7046	10	1/4-20	1.125"	Two Hole End Tap	1020, 1020-S
7047	10	M6 x 1.00	1.125"	Two Hole End Tap	
7036	10	1/4-20	1.125"	Three Hole End Tap	1030, 1030-S
7037	10	M6 x 1.00	1.125"	Three Hole End Tap	
7064	10	1/4-20	1.125"	Four Hole End Tap	2020, 2020-S
7067	10	M6 x 1.00	1.125"	Four Hole End Tap	
7038	10	1/4-20	1.125"	Eight Hole End Tap	2040, 2040-S
7039	10	M6 x 1.00	1.125"	Eight Hole End Tap	
7035	15	1/8 NPT	—	Single Hole End Tap	1501, 1501-LS, 1502, 1502-LS, 1503, 1503-LS, 1504, 1504-LS, 1515, 1515-S, 1515-Lite, 1515-LS, 1515-UL, 1515-ULS, 1517, 1517-LS, 1547
7060	15	5/16-18	1.250"	Single Hole End Tap	
7059	15	M8 x 1.25	1.250"	Single Hole End Tap	
7025	15	3/8-16	1.500"	Single Hole End Tap	
7053	15	M10 x 1.50	1.500"	Single Hole End Tap	
7054	15	7/16-14	1.500"	Single Hole End Tap	
7014	15	5/16-18	1.250"	Two Hole End Tap	1534-Lite, 1575
7015	15	M8 x 1.25	1.250"	Two Hole End Tap	
7016	15	5/16-18	1.250"	Two Hole End Tap	3034-Lite, 3075
7017	15	M8 x 1.25	1.250"	Two Hole End Tap	
7045	15	5/16-18	1.250"	Two Hole End Tap	1530, 1530-S, 1530-Lite, 1530-LS, 1530-UL, 1530-ULS
7048	15	M8 x 1.25	1.250"	Two Hole End Tap	
7024	15	3/8-16	1.500"	Two Hole End Tap	
7032	15	M10 x 1.50	1.500"	Two Hole End Tap	
7033	15	7/16-14	1.500"	Two Hole End Tap	
7049	15	3/8-16	1.500"	Three Hole End Tap	1545, 1545-S, 1545-LS
7026	15	5/16-18	1.250"	Three Hole End Tap	
7028	15	M8 x 1.25	1.250"	Three Hole End Tap	
7052	15	3/8-16	1.500"	Four Hole End Tap	3030, 3030-S, 3030-Lite, 3030-LS
7055	15	5/16-18	1.250"	Four Hole End Tap	
7056	15	M8 x 1.25	1.250"	Four Hole End Tap	
7057	15	3/8-16	1.500"	Eight Hole End Tap	3060
7029	15	5/16-18	1.250"	Eight Hole End Tap	
7031	15	M8 x 1.25	1.250"	Eight Hole End Tap	
20-7063	20	M5 x .80	22.23mm	Single Hole End Tap	20-2020
20-7061	20	10-32	22.23mm	Single Hole End Tap	
20-7047	20	M5 x .80	22.23mm	Two Hole End Tap	20-2040
20-7046	20	10-32	22.23mm	Two Hole End Tap	
20-7067	20	M5 x .80	22.23mm	Four Hole End Tap	20-4040
20-7064	20	10-32	22.23mm	Four Hole End Tap	
25-7061	25	1/4-20	28.58mm	Single Hole End Tap	25-2501, 25-2502, 25-2503, 25-2504, 25-2525, 25-2527
25-7063	25	M6 x 1.00	28.58mm	Single Hole End Tap	
25-7006	25	10-32	22.23mm	Two Hole End Tap	25-2514
25-7007	25	M5 x .80	22.23mm	Two Hole End Tap	
25-7008	25	10-32	22.23mm	Two Hole End Tap	25-5013
25-7009	25	M5 x .80	22.23mm	Two Hole End Tap	

Machining Services

Tap Profile End (Continued)

Part No.	Series	Tap Size	Minimum Depth	Service Type	Applicable Profiles
25-7046	25	1/4-20	28.58mm	Two Hole End Tap	25-2550
25-7047	25	M6 x 1.00	28.58mm	Two Hole End Tap	
25-7036	25	1/4-20	28.58mm	Three Hole End Tap	25-2576
25-7037	25	M6 x 1.00	28.58mm	Three Hole End Tap	
25-7064	25	1/4-20	28.58mm	Four Hole End Tap	25-5050
25-7067	25	M6 x 1.00	28.58mm	Four Hole End Tap	
25-7038	25	1/4-20	28.58mm	Eight Hole End Tap	25-5010
25-7039	25	M6 x 1.00	28.58mm	Eight Hole End Tap	
30-7059	30	M8 x 1.25	31.75mm	Single Hole End Tap	30-3001, 30-3002, 30-3003, 30-3004, 30-3030, 30-3022
30-7060	30	5/16-18	31.75mm	Single Hole End Tap	
30-7048	30	M8 x 1.25	31.75mm	Two Hole End Tap	30-3060
30-7045	30	5/16-18	31.75mm	Two Hole End Tap	
30-7056	30	M8 x 1.25	31.75mm	Four Hole End Tap	30-6060
30-7055	30	5/16-18	31.75mm	Four Hole End Tap	
40-7060	40	5/16-18	31.75mm	Single Hole End Tap	40-4001, 40-4002, 40-4003, 40-4004, 40-4030-Lite, 40-4040, 40-4040-Lite, 40-4040-UL, 40-4045-Lite, 40-4093, 40-4094, 40-4096
40-7059	40	M8 x 1.25	31.75mm	Single Hole End Tap	
40-7025	40	3/8-16	38.10mm	Single Hole End Tap	
40-7053	40	M10 x 1.50	38.10mm	Single Hole End Tap	
40-7054	40	7/16-14	38.10mm	Single Hole End Tap	
40-7014	40	5/16-18	31.75mm	Two Hole End Tap	40-4020
40-7015	40	M8 x 1.25	31.75mm	Two Hole End Tap	
40-7016	40	5/16-18	31.75mm	Two Hole End Tap	40-8020
40-7017	40	M8 x 1.25	31.75mm	Two Hole End Tap	
40-7045	40	5/16-18	31.75mm	Two Hole End Tap	40-4080, 40-4080-Lite, 40-4080-UL, 40-4082-Lite, 40-4083-Lite, 40-4084-Lite, 40-4085-Lite
40-7048	40	M8 x 1.25	31.75mm	Two Hole End Tap	
40-7024	40	3/8-16	38.10mm	Two Hole End Tap	
40-7032	40	M10 x 1.50	38.10mm	Two Hole End Tap	
40-7033	40	7/16-14	38.10mm	Two Hole End Tap	
40-7026	40	5/16-18	31.75mm	Three Hole End Tap	40-4012
40-7028	40	M8 x 1.25	31.75mm	Three Hole End Tap	
40-7055	40	5/16-18	31.75mm	Four Hole End Tap	40-8080
40-7056	40	M8 x 1.25	31.75mm	Four Hole End Tap	
40-7029	40	5/16-18	31.75mm	Eight Hole End Tap	40-8016
40-7031	40	M8 x 1.25	31.75mm	Eight Hole End Tap	
45-7053	45	M12 x 1.75	38.10mm	Single Hole End Tap	45-4545, 45-4545-Lite
45-7054	45	1/2-13	38.10mm	Single Hole End Tap	
45-7032	45	M12 x 1.75	38.10mm	Two Hole End Tap	45-4590
45-7024	45	1/2-13	38.10mm	Two Hole End Tap	
45-7036	45	M12 x 1.75	38.10mm	Four Hole End Tap	45-9090
45-7035	45	1/2-13	38.10mm	Four Hole End Tap	

80/20 BUILD YOUR IDEA
More on 80/20® products available at 8020.net

Access Hole

- Provides clearance hole at custom or predetermined locations along length of profile

Open Style Access Hole (specify from the left end of profile)

Part No.	Series	Service Type	Hole Diameter
7051	10	Access Hole for 10 Series Profiles	.217"
7050	15	Access Hole for 15 Series Profiles	.295"
20-7069	20	Access Hole for 20 Series Profiles	4.60mm
25-7051	25	Access Hole for 25 Series Profiles	5.50mm
30-7246	30	Access Hole for 30 Series Profiles	8.30mm
40-7050	40	Access Hole for 40 Series Profiles	7.50mm
45-7248	45	Access Hole for 45 Series Profiles	10.00mm
7246	RT	Access Hole for Ready Tube Series Profiles	.328"

Ordering Example: (2) 1530 x 35.75 w/ #7050 in slot T at .750" and in slot U at .750" from Left End

Access Hole Designations

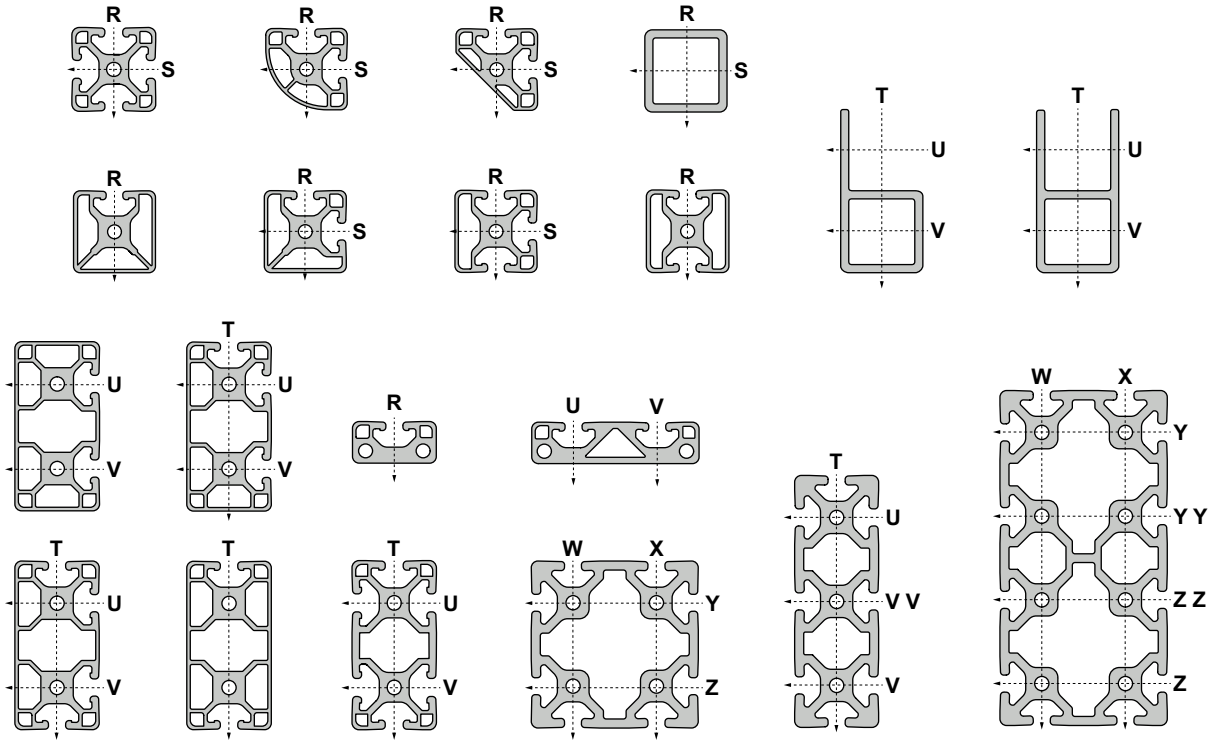

Machining Services

Access Hole (Continued)

Predetermined Style Access Hole (specify on left, right, or both ends of profile)

Series	One Hole Style (per T-slot)	Two Hole Style (per T-slot)	Three Hole Style (per T-slot)	Four Hole Style (per T-slot)
10	**Style C** (.219" Diameter Drill Thru)	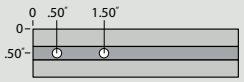 **Style D** (.219" Diameter Drill Thru)	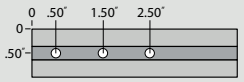 **Style H** (.219" Diameter Drill Thru)	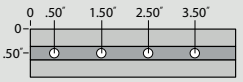 **Style J** (.219" Diameter Drill Thru)
15	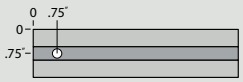 **Style A** (.295" Diameter Drill Thru)	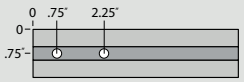 **Style B** (.295" Diameter Drill Thru)	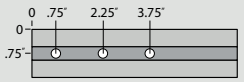 **Style F** (.295" Diameter Drill Thru)	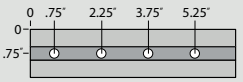 **Style G** (.295" Diameter Drill Thru)
20	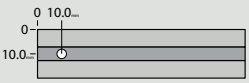 **Style MN** (4.60mm Diameter Drill Thru)	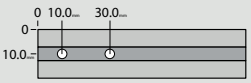 **Style MO** (4.60mm Diameter Drill Thru)	—	—
25	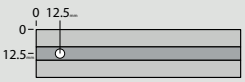 **Style MC** (5.50mm Diameter Drill Thru)	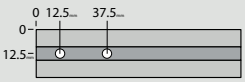 **Style MD** (5.50mm Diameter Drill Thru)	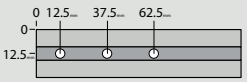 **Style MH** (5.50mm Diameter Drill Thru)	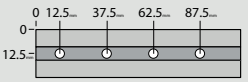 **Style MJ** (5.50mm Diameter Drill Thru)
30	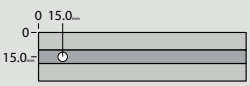 **Style MR** (8.30mm Diameter Drill Thru)	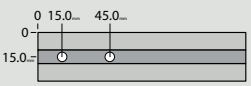 **Style MS** (8.30mm Diameter Drill Thru)	—	—
40	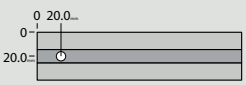 **Style MA** (7.50mm Diameter Drill Thru)	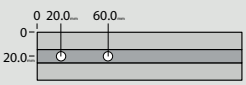 **Style MB** (7.50mm Diameter Drill Thru)	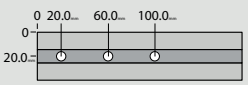 **Style MF** (7.50mm Diameter Drill Thru)	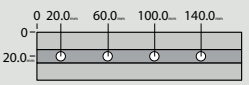 **Style MG** (7.50mm Diameter Drill Thru)
45	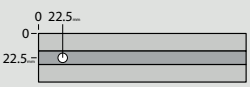 **Style MV** (10.00mm Diameter Drill Thru)	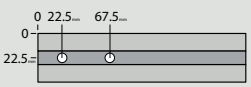 **Style MW** (10.00mm Diameter Drill Thru)	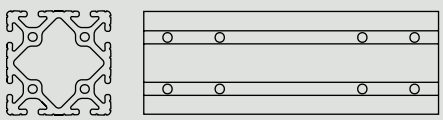 **Ordering Example:** (1) 3030 x 12.00" w/ #7050 Style B in Y and Z left end, #7050 Style B in Y and Z right end.	
RT	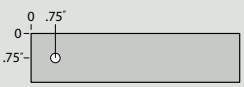 **Style HA** (.328" Diameter Drill Thru)	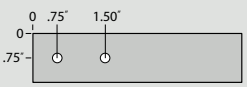 **Style HB** (.328" Diameter Drill Thru)		

80/20 BUILD YOUR IDEA
More on 80/20® products available at 8020.net

Anchor Fastener Counterbore / Butt Fastener Counterbore

- Required when using anchor fasteners (pg. 3-12) and butt fasteners (pg. 3-15)
- When ordering, designate profile end (left, right, or both) that requires counterbore

Anchor Fastener Part No.	Butt Fastener Part No.	Series	Counterbore Size
7042	7043	10	.563" Diameter x .425" Deep
7040	7041	15	.813" Diameter x .660" Deep
7117*	7118*	15	20.00mm Diameter x 16.69mm Deep
20-7042	—	20	12.00mm Diameter x 9.09mm Deep
25-7042	25-7043	25	14.30mm Diameter x 10.72mm Deep
30-7044	—	30	15.88mm Diameter x 13.21mm Deep
40-7044	40-7049	40	20.00mm Diameter x 16.69mm Deep
40-7115**	40-7116**	40	.813" Diameter x .660" Deep

*40 Series Counterbore Machined for 15 Series

**15 Series Counterbore Machined for 40 Series

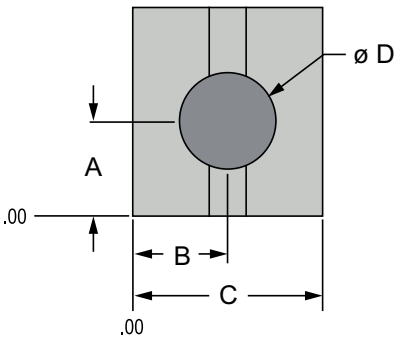

Anchor Fastener Counterbore Details				
Series	A	B	C	D
10	.406"	.500"	1.000"	.563" x .425" Deep
15	.855"	.750"	1.500"	.813" x .660" Deep
20	10.00mm	10.00mm	20.00mm	12.00mm x 9.09mm Deep
25	10.31mm	12.50mm	25.00mm	14.30mm x 10.72mm Deep
30	15.88mm	15.00mm	30.00mm	15.90mm x 13.21mm Deep
40	19.99mm	20.00mm	40.00mm	20.00mm x 16.69mm Deep

Butt Fastener Counterbore Details				
Series	A	B	C	D
10	.406"	.500"	1.000"	.563" x .425" Deep
15	.721"	.750"	1.500"	.813" x .660" Deep
25	10.31mm	12.50mm	25.00mm	14.30mm x 10.72mm Deep
40	19.99mm	20.00mm	40.00mm	20.00mm x 16.69mm Deep

Ordering Example: (3) 1530 x 35.75 w/ #7040 at F, G, in Left End and at H in Right End

Anchor Fastener Designations

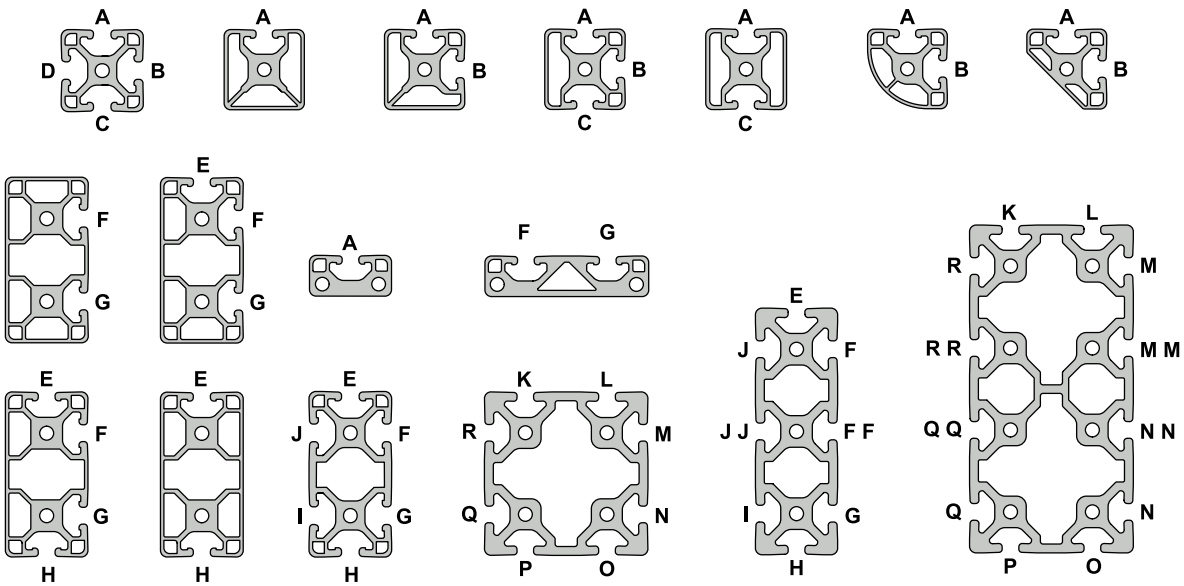

Machining Services

Drill Thru & Counterbore

- Includes drill thru and counterbore

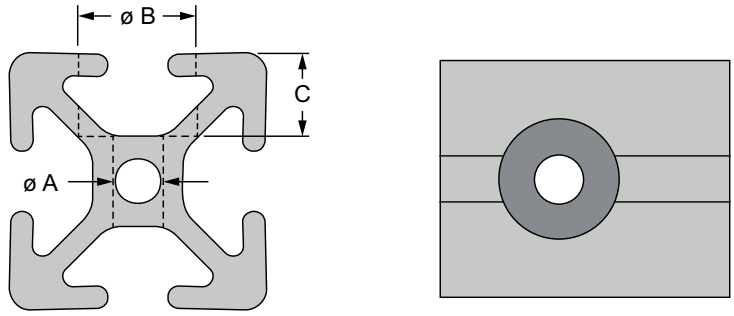

Open Style Drill Thru & Counterbore (specify from the left end of profile)

Part No.	Series	A	B	C
7256	10	.257"	.406"	.328"
7257	15	.328"	.531"	.495"
25-7256	25	6.53mm	10.31mm	8.33mm
30-7257	30	8.33mm	13.49mm	9.27mm
40-7257	40	8.33mm	13.49mm	12.70mm

Ordering Example: (2) 1530 x 24.00 w/ #7257 in F @ .750" and 23.50" from Left End

Drill Thru & Counterbore Designations

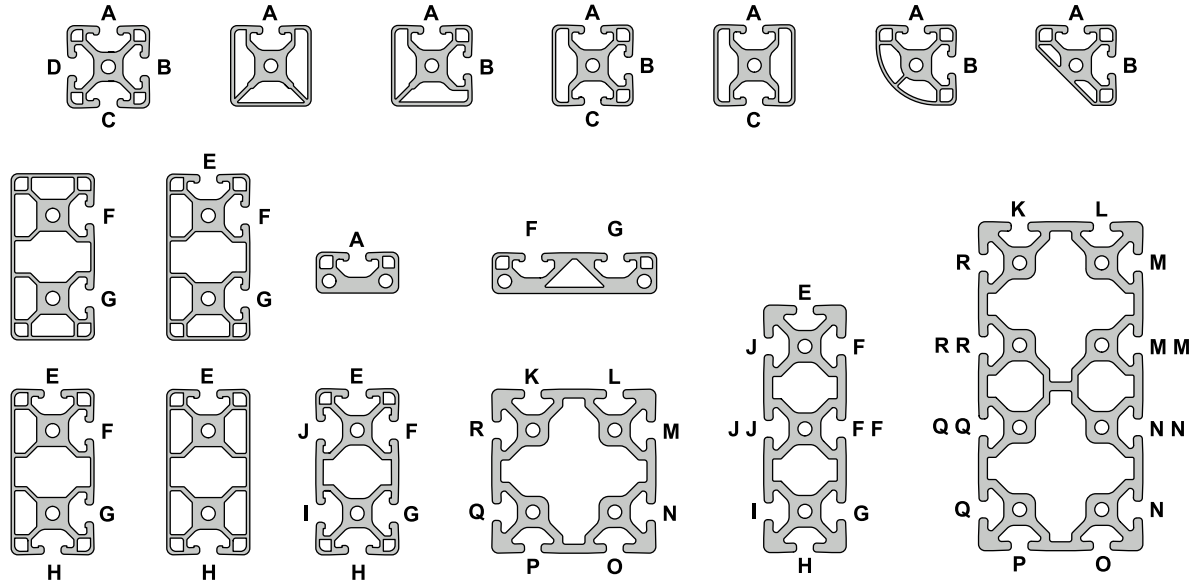

80/20 BUILD YOUR IDEA
More on 80/20® products available at 8020.net

Drill Thru & Counterbore (Continued)

Predetermined Style Drill Thru & Counterbore (specify on left, right, or both ends of profile)

Series	One Hole Style (per T-slot)	Two Hole Style (per T-slot)	Three Hole Style (per T-slot)	Four Hole Style (per T-slot)
10	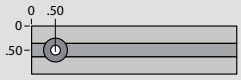 **Style C** (.257" Diameter Drill Thru) (.406" Diameter Counterbore)	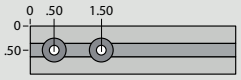 **Style D** (.257" Diameter Drill Thru) (.406" Diameter Counterbore)	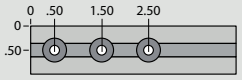 **Style H** (.257" Diameter Drill Thru) (.406" Diameter Counterbore)	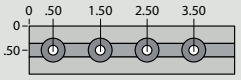 **Style J** (.257" Diameter Drill Thru) (.406" Diameter Counterbore)
15	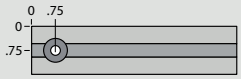 **Style A** (.328" Diameter Drill Thru) (.531" Diameter Counterbore)	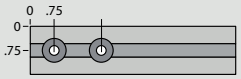 **Style B** (.328" Diameter Drill Thru) (.531" Diameter Counterbore)	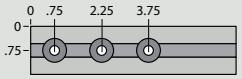 **Style F** (.328" Diameter Drill Thru) (.531" Diameter Counterbore)	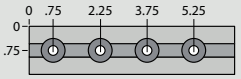 **Style G** (.328" Diameter Drill Thru) (.531" Diameter Counterbore)
25	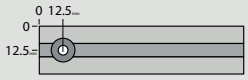 **Style MC** (6.53mm Diameter Drill Thru) (10.31mm Diameter Counterbore)	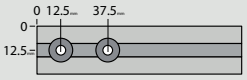 **Style MD** (6.53mm Diameter Drill Thru) (10.31mm Diameter Counterbore)	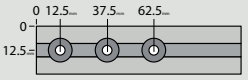 **Style MH** (6.53mm Diameter Drill Thru) (10.31mm Diameter Counterbore)	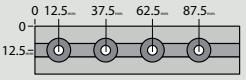 **Style MJ** (6.53mm Diameter Drill Thru) (10.31mm Diameter Counterbore)
30	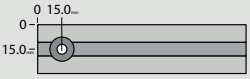 **Style MR** (8.33mm Diameter Drill Thru) (13.49mm Diameter Counterbore)	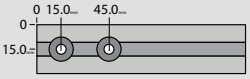 **Style MS** (8.33mm Diameter Drill Thru) (13.49mm Diameter Counterbore)	–	–
40	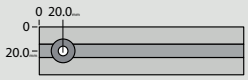 **Style MA** (8.33mm Diameter Drill Thru) (13.49mm Diameter Counterbore)	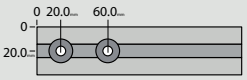 **Style MB** (8.33mm Diameter Drill Thru) (13.49mm Diameter Counterbore)	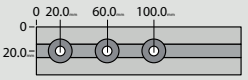 **Style MF** (8.33mm Diameter Drill Thru) (13.49mm Diameter Counterbore)	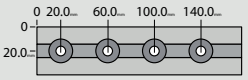 **Style MG** (8.33mm Diameter Drill Thru) (13.49mm Diameter Counterbore)

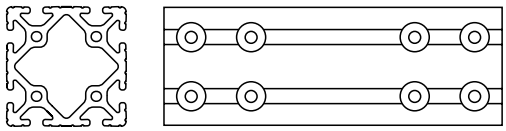

Ordering Example:
(1) 3030 x 40.00" w/ #7257 Style B in
M and N left end, #7257 Style B in M and N right end.

Machining Services

Profile Miter Cut

- T-slotted profiles can be miter cut to angles of 0 to 75 degrees or 0 to 60 degrees for select profiles (with the exception of 3060 and 40-8016, which can only be cut to an angle of 45 degrees across the 6.00” (160mm) side
- When ordering, designate profile end (left, right, or both) that requires miter; A drawing is required with this machining service; for project design assistance contact a Design Technician at www.8020.net

Minimum and Maximum Angle Refers to Dimension A

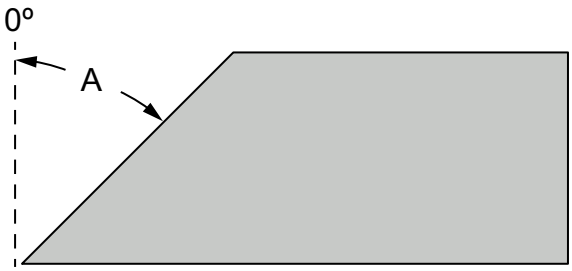

Part No.	Series	Applicable Profiles	Minimum Angle	Maximum Angle
7066	10	1001, 1001-S, 1002, 1002-S, 1003, 1003-S, 1004, 1004-S, 1010, 1010-S, 1012, 1012-S, 1050	0º	75º
7070	10	1020, 1020-S, 2012	0º	75º
7072	10	1030, 1030-S	0º	75º
7071	10	2020, 2020-S	0º	75º
7073	10	2040, 2040-S	0º	60º
7065	15	1501, 1501-LS, 1502, 1502-LS, 1503, 1503-LS, 1504, 1504-LS, 1515, 1515-S, 1515-Lite, 1515-LS, 1515-UL, 1515-ULS, 1517, 1517-LS, 1534-Lite, 1547, 1575	0º	75º
7075	15	1530, 1530-Lite, 1530-LS, 1530-S, 1530-UL, 1530-ULS, 3034-Lite, 3075	0º	60º
7076	15	1545, 1545-S, 1545-LS	0º	60º
7085	15	3030, 3030-Lite, 3030-LS, 3030-S	0º	60º
7087	15	3060	0º	45º
20-7065	20	20-2020	0º	75º
20-7075	20	20-2040	0º	60º
20-7085	20	20-4040	0º	60º
25-7066	25	25-2501, 25-2502, 25-2503, 25-2504, 25-2525, 25-2527, 25-2514	0º	75º
25-7070	25	25-2550, 25-5013	0º	60º
25-7071	25	25-5050	0º	60º
25-7072	25	25-2576	0º	60º
25-7073	25	25-5010	0º	45º
30-7065	30	30-3001, 30-3002, 30-3003, 30-3004, 30-3030, 30-3022	0º	75º
30-7075	30	30-3060	0º	60º
30-7085	30	30-6060	0º	60º
40-7065	40	40-4001, 40-4002, 40-4003, 40-4004, 40-4040, 40-4040-Lite, 40-4040-UL, 40-4030-Lite, 40-4045-Lite, 40-4020	0º	75º
40-7075	40	40-4080, 40-4080-Lite, 40-4080-UL, 40-4082-Lite, 40-4083-Lite, 40-4084-Lite, 40-4085-Lite, 40-8020	0º	60º
40-7076	40	40-4012	0º	60º
40-7085	40	40-8080	0º	60º
40-7087	40	40-8016	0º	45º
45-7065	45	45-4545, 45-4545-Lite	0º	75º
45-7075	45	45-4590	0º	60º
45-7085	45	45-9090	0º	60º

80/20 BUILD YOUR IDEA
More on 80/20® products available at 8020.net

Profile Miter Cut Worksheet

All T-slotted profiles may have miter cuts from 0º to 60 or 75º, EXCEPT for 3060 which can only be cut along the long side at 0º to 45º and 40-8016 which can only be cut along the long side at 0º to 45º. Example shown below:

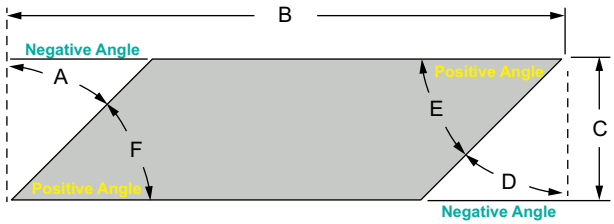

Example:
The following fields are required to complete a custom profile miter cut.

A = -30º **B** = 43.18" or 450mm **C** = 3.00" or 80mm
D = -45º **E** = 45º **F** = 60º

AutoQuoterX® II always indicates material removed from the profile. (See dimension reference A and D)

Note: Structural shape maximum angle is dependent on profile size

Predetermined Style Drill Thru & Counterbore

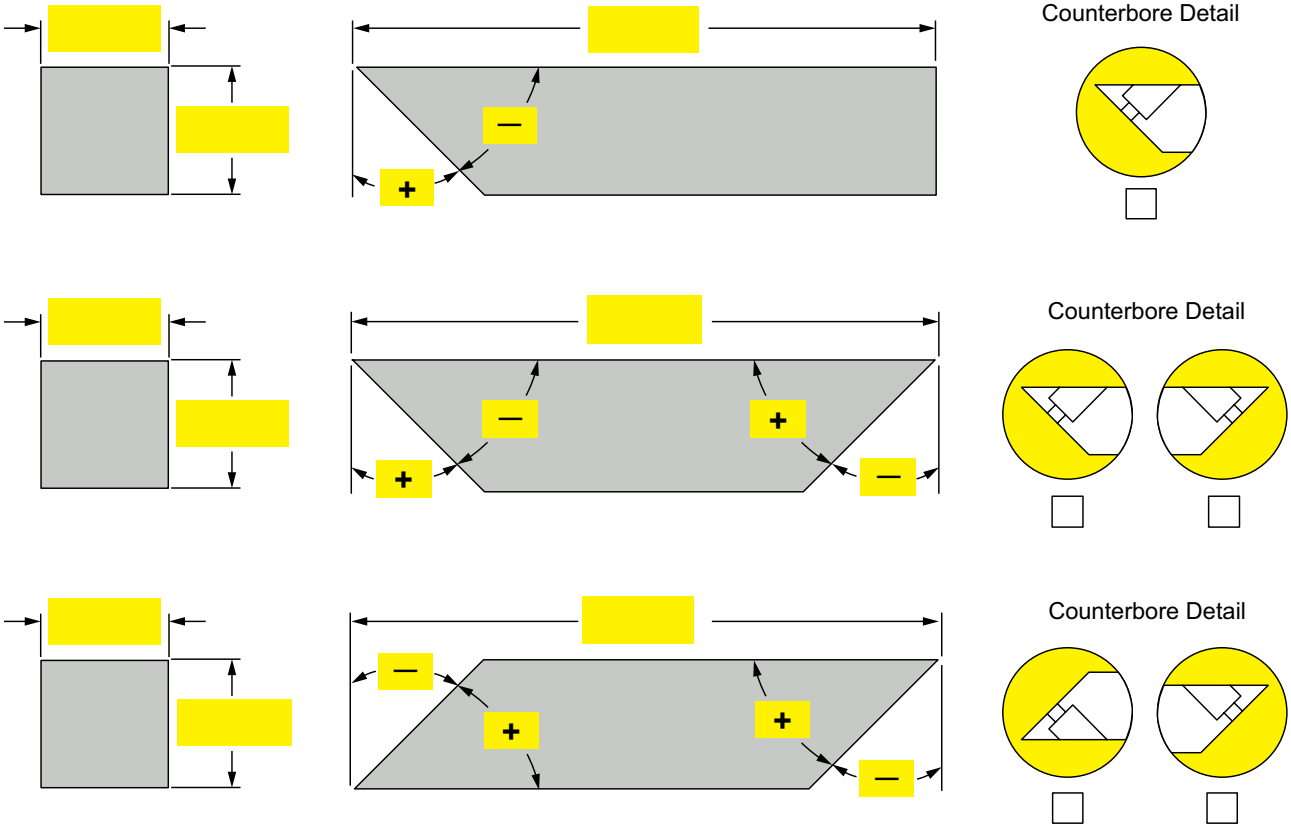

Machining Services

Miter Cut Counterbore

- Includes drill through and counterbore to create custom supports with angles ranging from 30 to 60 degrees; service is for one end of profile with included mounting hardware
- When ordering, designate profile end (left, right, or both) that requires miter

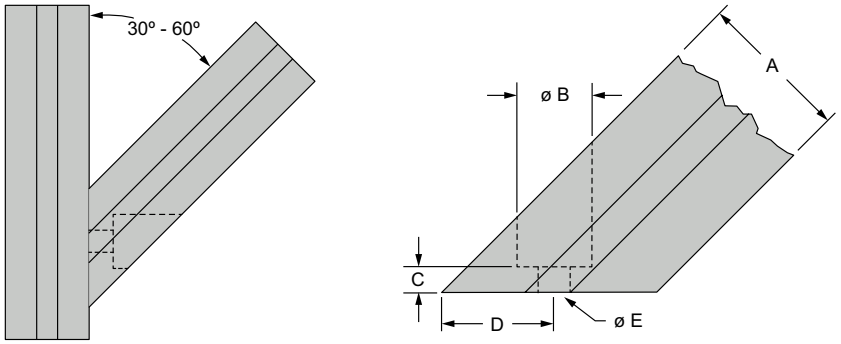

Part No.	Series	Applicable Profiles	A	B	C	D*	E
7083	10	1001, 1001-S, 1002, 1002-S, 1003, 1003-S, 1004, 1004-S, 1010, 1010-S	1.000"	.625"	.250"	.707"	.257"
7079	10	1020, 1020-S					
7074	10	1030, 1030-S					
7082	15	1501, 1501-LS, 1502, 1502-LS, 1503, 1503-LS, 1504, 1504-LS, 1515, 1515-S, 1515-Lite, 1515-LS, 1515-UL, 1515-ULS	1.500"	.750"	.250"	1.061"	.328"
7092	15	1530, 1530-Lite, 1530-LS, 1530-S, 1530-UL, 1530-ULS					
7094	15	1545, 1545-S, 1545-LS					
20-7082	20	20-2020	20.00mm	12.70mm	6.30mm	14.14mm	5.30mm
20-7092	20	20-2040					
25-7083	25	25-2501, 25-2502, 25-2503, 25-2504, 25-2525	25.00mm	15.88mm	6.35mm	17.68mm	6.53mm
25-7079	25	25-2550					
25-7074	25	25-2576					
30-7082	30	30-3001, 30-3002, 30-3003, 30-3004, 30-3030	30.00mm	19.05mm	6.35mm	21.21mm	8.30mm
30-7092	30	30-3060					
40-7082	40	40-4001, 40-4002, 40-4003, 40-4004, 40-4040, 40-4040-Lite, 40-4040-UL	40.00mm	19.05mm	6.35mm	28.28mm	8.30mm
40-7092	40	40-4080, 40-4080-Lite, 40-4080-UL, 40-4082-Lite, 40-4083-Lite, 40-4084-Lite, 40-4085-Lite					
40-7094	40	40-4012					
45-7082	45	45-4545, 45-4545-Lite	45.00mm	19.05mm	6.35mm	31.81mm	8.30mm
45-7092	45	45-4590					

*The "D" dimension is for profiles positioned at a 45 degree angle.

Ordering Example: (2) 1515 x 14.00" w/ #7065 @ 45° Left End Per Drawing and #7082 Left End

Included Mounting Hardware

Series	Bolt Part No.	Bolt Description	Qty.	T-Nut Part No.	T-Nut Description	Qty.	Washer Part No.	Qty.
10	3067	1/4-20 x 5/8" Black SHCS	1 to 6	3382	Economy	1 to 6	3258	1 to 6
15	3112	5/16-18 x 3/4" Black SHCS	1 to 6	3278	Economy	1 to 6	3260	1 to 6
20	11-5512	M5 x 12mm Black SHCS	1 to 4	14122	Slide-In	1 to 4	11-6040	1 to 4
25	13-6516	M6 x 16mm Blue SHCS	1 to 6	3859	Economy	1 to 6	13-6045	1 to 6
30	11-8516	M8 x 16mm Black SHCS	1 to 4	13025	Self-Aligning	1 to 4	11-6042	1 to 4
40	13-8518	M8 x 18mm Blue SHCS	1 to 6	3838	Economy	1 to 6	13-6042	1 to 6
45	11-8520	M8 x 20mm Black SHCS	1 to 4	13049	Self-Aligning	1 to 4	11-6042	1 to 4

80/20 BUILD YOUR IDEA
More on 80/20® products available at 8020.net

Profile Miter Cut with Counterbore

- Includes a 45 degree cut and counterbore on both ends of a profile and includes mounting hardware
- Used for custom lengths up to 72" (1828.8mm) long.

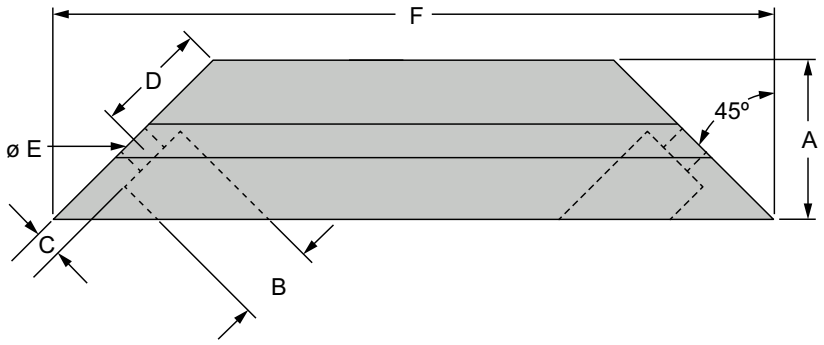

Part No.	Series	Applicable Profiles	A	B	C	D	E	F
7081	10	1001, 1001-S, 1002, 1002-S, 1003, 1003-S, 1004, 1004-S, 1010, 1010-S	1.000"	.625"	.250"	.707"	.257"	Custom
7084	10	1020, 1020-S	1.000"	.625"	.250"	.707"	.257"	
7086	10	1030, 1030-S	1.000"	.625"	.250"	.707"	.257"	
7080	15	1501, 1501-LS, 1502, 1502-LS, 1503, 1503-LS, 1504, 1504-LS, 1515, 1515-S, 1515-Lite, 1515-LS, 1515-UL, 1515-ULS	1.500"	.750"	.250"	1.061"	.328"	
7090	15	1530, 1530-Lite, 1530-LS, 1530-S, 1530-UL, 1530-ULS	1.500"	.750"	.250"	1.061"	.328"	
7093	15	1545, 1545-S, 1545-LS	1.500"	.750"	.250"	1.061"	.328"	
20-7080	20	20-2020	20.00mm	12.70mm	6.35mm	14.14mm	5.31mm	
20-7090	20	20-2040	20.00mm	12.70mm	6.35mm	14.14mm	5.31mm	
25-7081	25	25-2501, 25-2502, 25-2503, 25-2504, 25-2525	25.00mm	15.88mm	6.35mm	17.68mm	6.53mm	
25-7084	25	25-2550	25.00mm	15.88mm	6.35mm	17.68mm	6.53mm	
25-7086	25	25-2576	25.00mm	15.88mm	6.35mm	17.68mm	6.53mm	
30-7080	30	30-3001, 30-3002, 30-3003, 30-3004, 30-3030	30.00mm	19.05mm	6.35mm	21.21mm	8.33mm	
30-7090	30	30-3060	30.00mm	19.05mm	6.35mm	21.21mm	8.33mm	
40-7080	40	40-4001, 40-4002, 40-4003, 40-4004, 40-4040, 40-4040-Lite, 40-4040-UL	40.00mm	19.05mm	6.35mm	28.28mm	8.33mm	
40-7090	40	40-4080, 40-4080-Lite, 40-4080-UL, 40-4082-Lite, 40-4083-Lite, 40-4084-Lite, 40-4085-Lite	40.00mm	19.05mm	6.35mm	28.28mm	8.33mm	
40-7093	40	40-4012	40.00mm	19.05mm	6.35mm	28.28mm	8.33mm	
45-7080	45	45-4545, 45-4545-Lite	45.00mm	19.05mm	6.35mm	31.81mm	8.33mm	
45-7090	45	45-4590	45.00mm	19.05mm	6.35mm	31.81mm	8.33mm	

Ordering Example: (2) 1530 x 23.625 w/ #7090 Miter Cut and Counterbore, F = 23.625

Included Mounting Hardware

Series	Bolt Part No.	Bolt Description	Qty.	T-Nut Part No.	T-Nut Description	Qty.	Washer Part No.	Qty.
10	3067	1/4-20 x 5/8" Black SHCS	2 to 6	3382	Economy	2 to 6	3258	2 to 6
15	3112	5/16-18 x 3/4" Black SHCS	2 to 6	3278	Economy	2 to 6	3260	2 to 6
20	11-5512	M5 x 12mm Black SHCS	2 to 4	14122	Slide-In	2 to 4	11-6040	2 to 4
25	13-6516	M6 x 16mm Blue SHCS	2 to 6	3859	Economy	2 to 6	13-6045	2 to 6
30	11-8516	M8 x 16mm Black SHCS	2 to 4	13025	Self-Aligning	2 to 4	11-6042	2 to 4
40	13-8518	M8 x 18mm Blue SHCS	2 to 6	3838	Economy	2 to 6	13-6042	2 to 6
45	11-8520	M8 x 20mm Black SHCS	2 to 4	13049	Self-Aligning	2 to 4	11-6042	2 to 4

Machining Services

Clearance Drill Thru in T-Slot

- Used for additional clearance while adding stem casters or leveling feet to a profile
- When ordering, designate T-slot position from left end of profile

Part No.	Series	Service Type	Hole Diameter
7244	10 15	Drill Thru Hole in T-Slot	.257"
7246	10 15 RT		.328"
7248	10 15		.438"
7240	15		.563"
65-7244	25 30 40 45		6.53mm
65-7246	25 30 40 45		8.33mm
65-7248	25 30 40 45		11.13mm
65-7240	30 40 45		14.30mm

Ordering Example: (2) 1530 x 24.00" w/ #7248 in T @ 1.50" and 22.50" from Left End

Clearance Drill Thru in T-Slot Designations

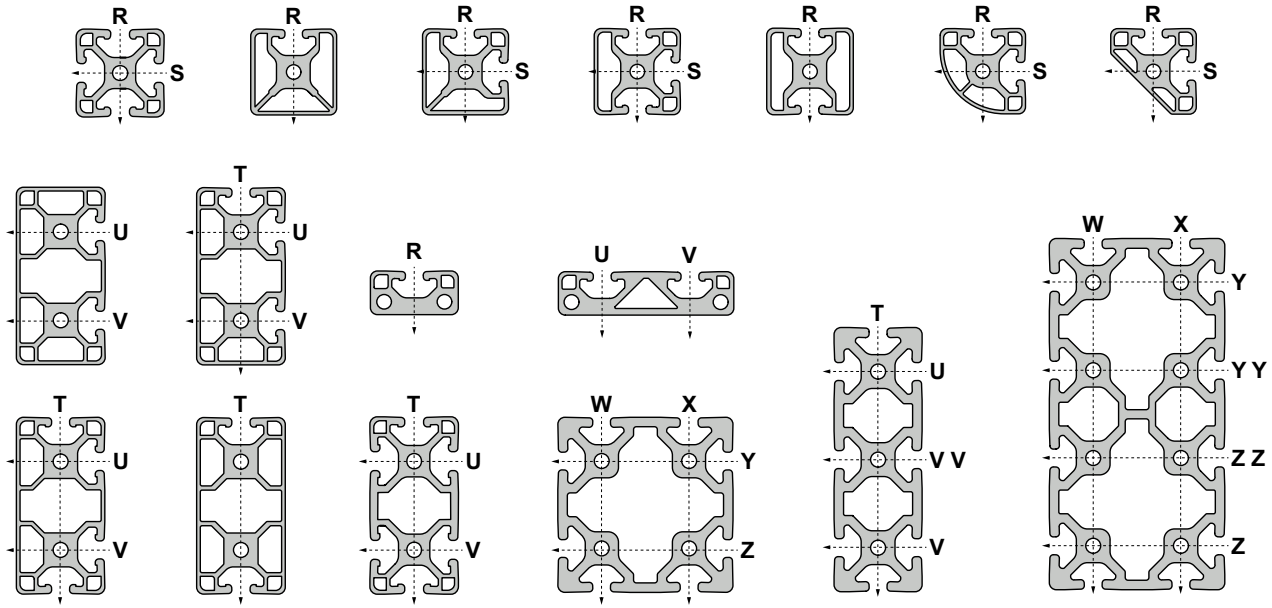

80/20 BUILD YOUR IDEA
More on 80/20® products available at 8020.net

Clearance Drill Thru Between T-Slots

- Used for additional clearance while adding stem casters or leveling feet to a profile
- When ordering, designate T-slot position from left end of profile

Part No.	Series	Service Type	Hole Diameter
7241	10 15	Drill Thru Hole in T-Slot	.257"
7243	10 15		.328"
7245	10 15		.438"
7247	15		.563"
65-7241	25 30 40 45		6.53mm
65-7243	25 30 40 45		8.33mm
65-7245	25 30 40 45		11.13mm
65-7247	30 40 45		14.30mm

Ordering Example: (2) 1530 x 24.00" w/ #7247 between U and V @ 1.50" from Left End

Clearance Drill Thru Between T-Slot Designations

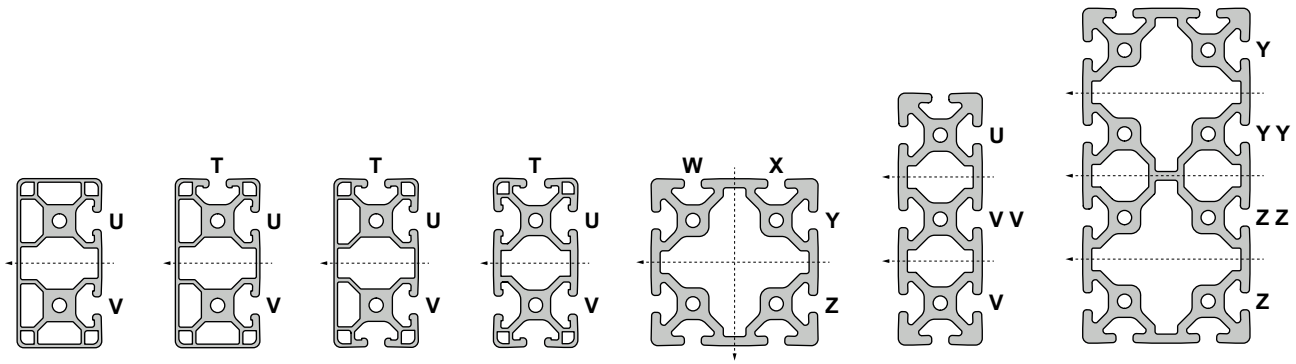

Machining Services

Deluxe Door Handle Profile Milling

- Required when using the deluxe door handle (pg. 4-118) to a T-slot profile
- When ordering, designate distance from the end of profile to the centerline (CL)

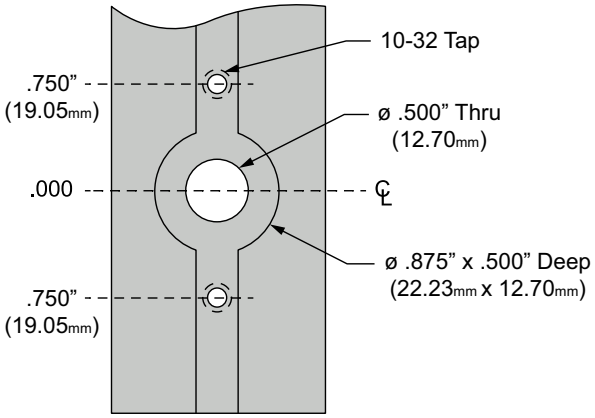

Positioning Example

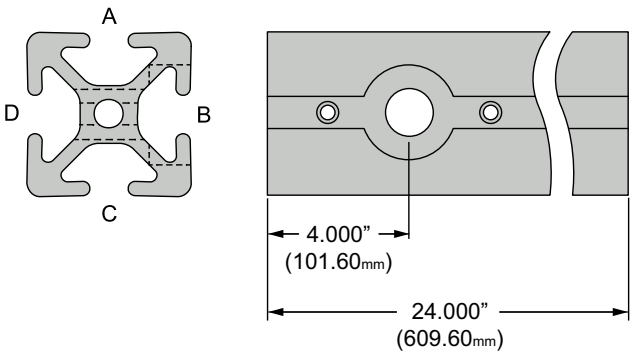

Part No.	Series	Service Type	Bore Size (Depth)
7305	15	Drill Thru Hole for Deluxe Door Handle	ø .875" x (.500")
65-7305	40		ø 22.23mm x (12.70mm)

Ordering Example: (1) 1515 x 24.00" w/ #7305 in B @ 4.00" from left end.

Deluxe Door Handle Machining Designations

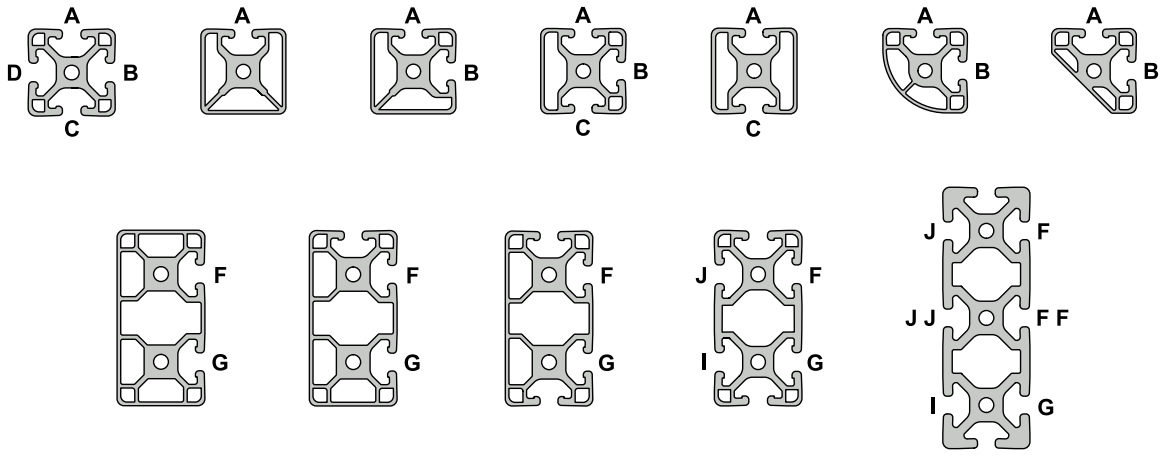

80/20 BUILD YOUR IDEA
More on 80/20® products available at 8020.net

Furniture Style Handle Profile Milling

- Required when using the furniture style door handle (pg. 4-119) to a T-slot profile
- When ordering, designate distance from the end of profile to the centerline (CL)

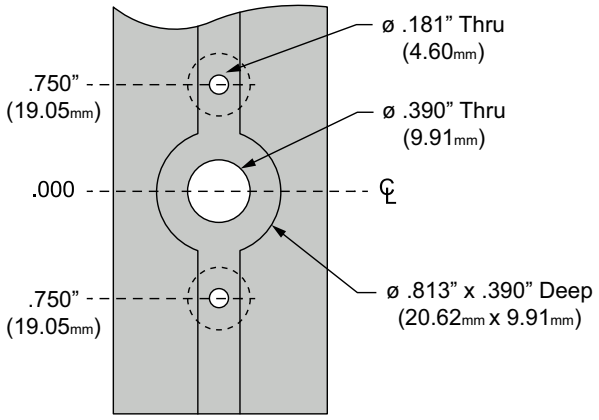

Positioning Example

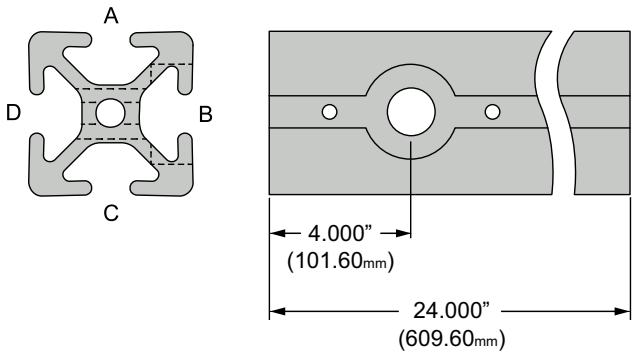

Part No.	Series	Service Type	Bore Size (Depth)
7315*	10 15	Drill Thru Hole for Furniture Style Handle	ø .812" x (.390")
65-7315*	25 40		ø 20.62mm x (9.91mm)

*The counterbore is only for the 10 and 25 series.

Ordering Example: (1) 1515 x 24.00" w/ #7315 in B @ 4.00" from left end.

Furniture Style Handle Machining Designations

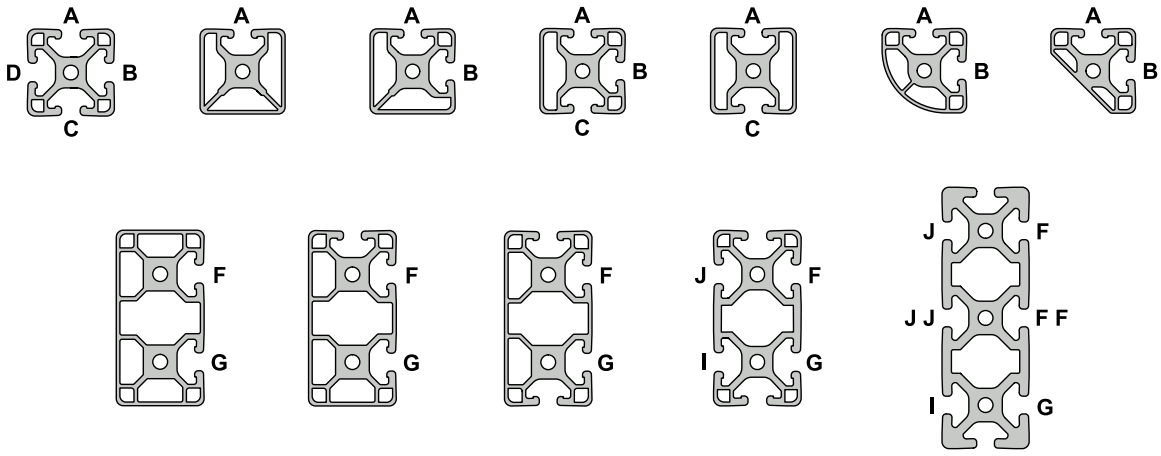

Machining Services

Miter Connector Profile Milling

- Required when using the miter connector (pg. 3-20) for a profile connection

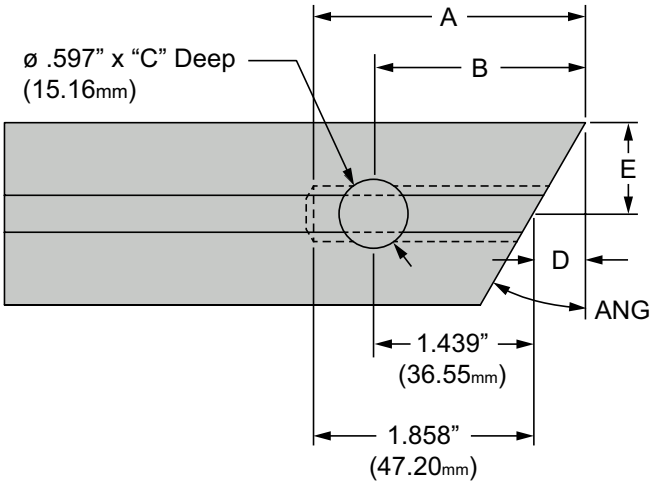

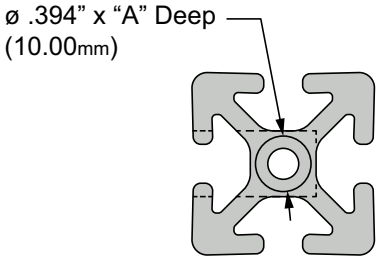

Miter Connector Profile Milling																
Bar Cut Angle (0-45):	ANG	7.5°			15°			22.5°			30°			45°		
Compatible Series:	---	15	40	45	15	40	45	15	40	45	15	40	45	15	40	45
ø.394 (10mm) Drill Depth:	A	1.957"	49.83mm	50.16mm	2.059"	52.55mm	53.22mm	2.169"	55.48mm	56.51mm	2.291"	58.74mm	60.18mm	2.608"	67.19mm	69.69mm
ø.597 (15.16mm) C-bore from Miter Tip:	B	1.538"	39.18mm	39.51mm	1.640"	41.91mm	42.58mm	1.750"	44.84mm	45.87mm	1.872"	48.10mm	49.54mm	2.189"	56.55mm	59.05mm
Counterbore Depth:	C	1.036"	27.25mm	29.77mm	1.036"	27.25mm	29.77mm	1.036"	27.25mm	29.77mm	1.036"	27.25mm	29.77mm	1.036"	27.25mm	29.77mm
Miter Offset:	D	.099"	2.63mm	2.96mm	.201"	5.36mm	6.03mm	.311"	8.28mm	9.32mm	.433"	11.55mm	12.99mm	.750"	20.00mm	22.50mm
Center of Bar:	E	.750"	20.00mm	22.50mm	.750"	20.00mm	22.50mm	.750"	20.00mm	22.50mm	.750"	20.00mm	22.50mm	.750"	20.00mm	22.50mm

Part No.	Series	Service Type
7110	15	Counterbore for Miter Connector
40-7110	40	
45-7110	45	

Miter Connector Machining Designations

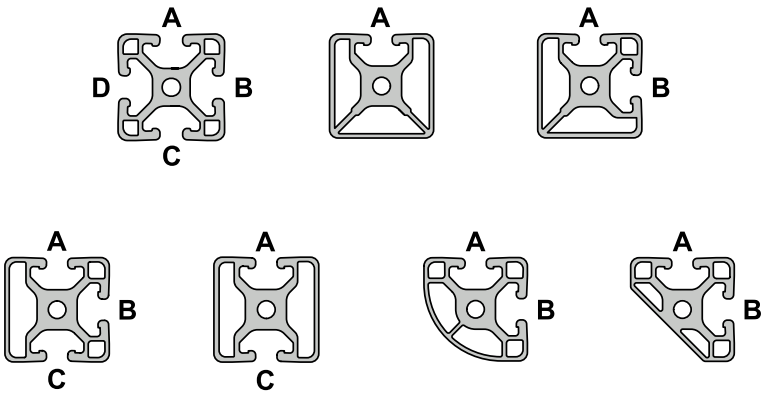

80/20 BUILD YOUR IDEA
More on 80/20® products available at 8020.net

Economy T-Nut Clearance Profile Milling

- Allows placement of economy T-nut into a T-slot profile with captivated end
- When ordering, designate distance from the end of profile to the centerline (CL) and specify T-slot location

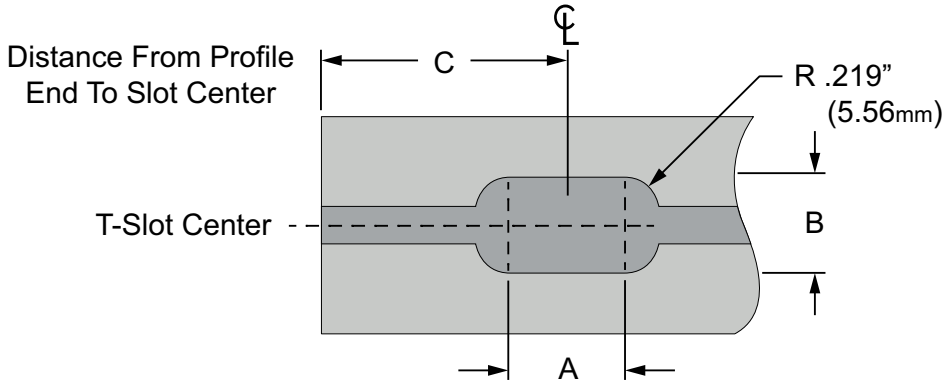

Part No.	Series	Compatiable T-Nut Type	Slot Length "A"	Slot Width "B"	Minimum Distance "C"	Tolerance
7098	10	Single	.625"	.506"	.532"	Slot Length +/- .030" Slot Width +/- .010"
7101	10	Double	1.625"	.506"	1.032"	
7103	10	Triple	2.203"	.506"	1.321"	
7099	15	Single	.763"	.700"	.601"	
7102	15	Double	2.638"	.700"	1.538"	
7104	15	Triple	3.198"	.700"	1.818"	
25-7098	25	Single	15.88mm	12.85mm	13.51mm	Slot Length +/- .76mm Slot Width +/- .25mm
25-7101	25	Double	41.28mm	12.85mm	26.21mm	
40-7099	40	Single	19.38mm	17.78mm	15.27mm	
40-7102	40	Double	67.00mm	17.78mm	39.07mm	

Ordering Example: (2) 1010 x 18.000 w/ #7098 in A @ 3.00 and 15.00 from Left End

Economy T-Nut Clearance Designations

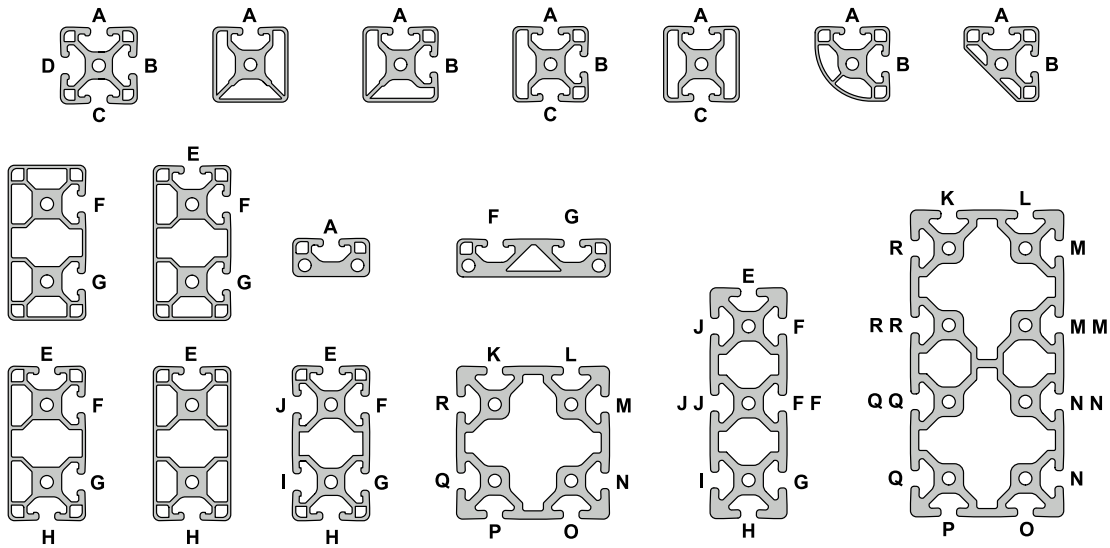

Machining Services

Central Connector Profile Milling

- Required when using the central connector (pg. 3-22); consists of drill through the profile end and counterbore
- When ordering, designate profile end (left, right or both) and T-slot for counterbore

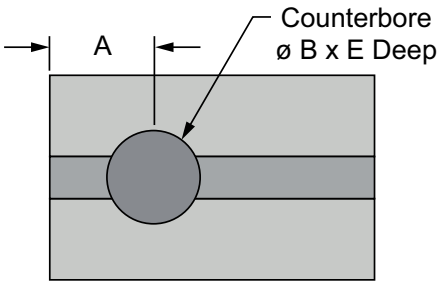

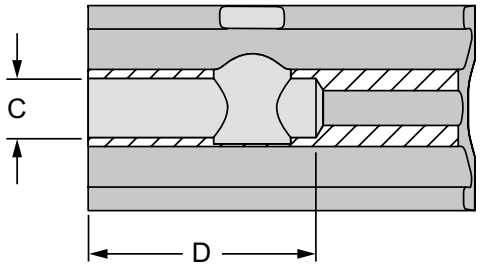

Part No.	Series	Service Type	A	B	C	D	E
7058	15	15 Series Profile Milling for Central Connector	1.260"	.597"	.469"	1.750"	1.025"
30-7058	30	30 Series Profile Milling for Central Connector	17.50mm	11.11mm	8.03mm	30.50mm	21.34mm
40-7058	40	40 Series Profile Milling for Central Connector	32.00mm	15.16mm	11.91mm	44.45mm	26.97mm
45-7058	45	45 Series Profile Milling for Central Connector	22.50mm	17.12mm	—	—	32.64mm

Central Connector Machining Designations

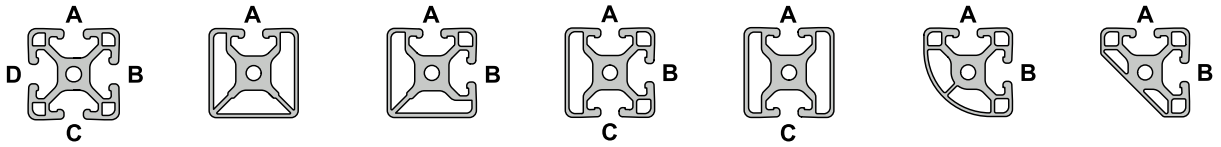

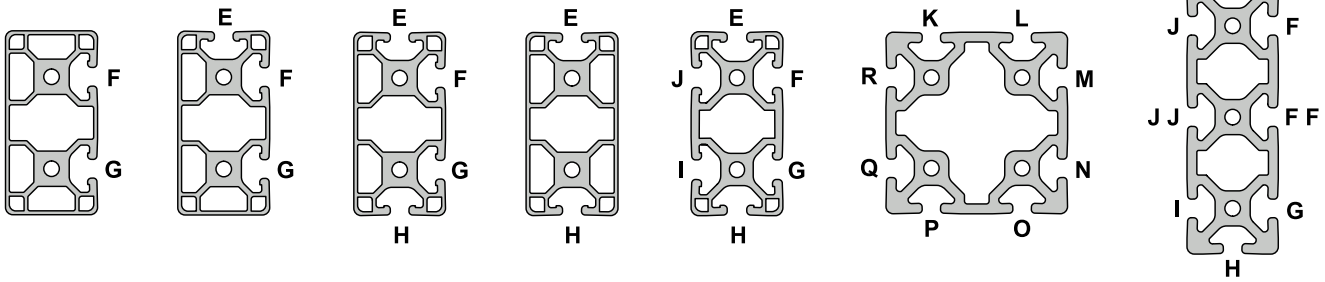

80/20 BUILD YOUR IDEA
More on 80/20® products available at 8020.net

Manifold Access Profile Milling

- Required for pressure manifolds (pg. 8-56); consists of drill through one wall of profile to access center cavity
- When ordering, designate distance from left end of profile; reference hole location by specifying “between” T-slot designations

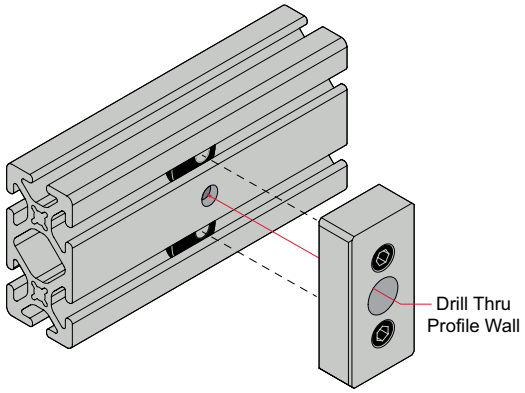

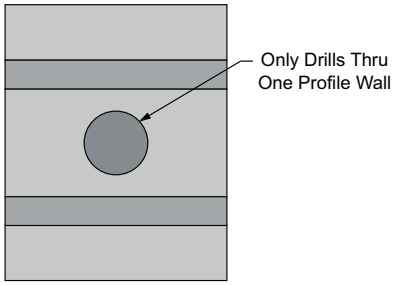

Part No.	Series	Service Type	Hole Diameter
7062	10	Drill Thru One Profile Wall	.327”
7068	15		.374”
25-7062	25		8.30mm
40-7068	40		9.50mm

Ordering Example: 1530: (1) @48.25” w/ #7068 btwn F and G @ 12.00” and 36.25” from left end.

Manifold Access Drill Thru Designations

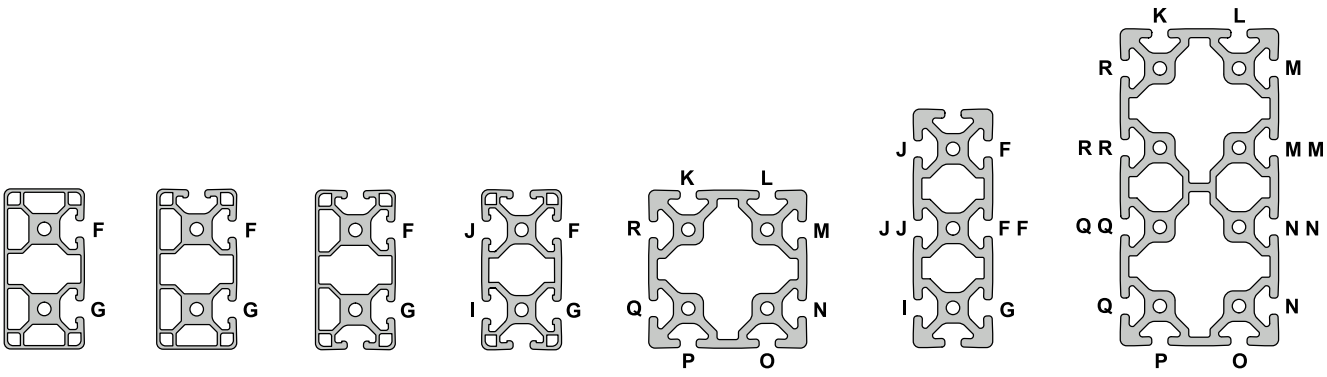

Machining Services

Bolt Connector Profile Milling

- Required when using the bolt connector (pg. 3-23);
- When ordering, designate profile end (left, right or both) and T-slot for clearance hole

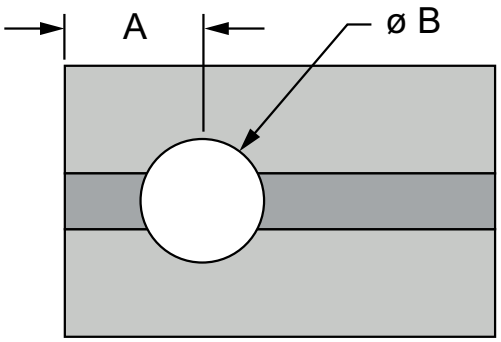

Part No.	Series	Service Type	Bolt Connector	A	B
30-7034	30	30 Series Profile Milling for Bolt Connector (30.00mm only)	13189	16.50mm	8.30mm
45-7034	45	45 Series Profile Milling for Bolt Connector (45.00mm)	13190	23.70mm	17.37mm
45-7037	45	45 Series Profile Milling for Bolt Connector (90.00mm)	13192	23.70mm	17.37mm

Ordering Example: (2) 45-4590 x 908.0mm w/45-7037 in slot R both ends.

Bolt Connector Machining Designations

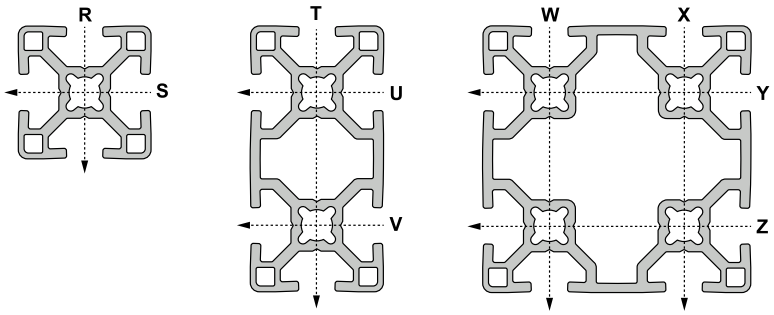

80/20 BUILD YOUR IDEA
More on 80/20® products available at 8020.net

Brake Holes for Linear Bearings

Part No.	Series	Hole Diameter	Part No.	Series	Hole Diameter
7401	10	.265"	7400	15	.344"

Ordering Example: (1) 6724 w/ #7401 @ LN, LR, LQ and LU

Fractional Part No.	Series	Hole Locations	X	X*	Y	Z
6715 / 6716*	10	LA	.937"	1.000"	—	1.562"
		LB	.937"	1.000"	.812"	—
		LC	.937"	1.000"	—	1.562"
6716*	10	LD	—	3.000"	—	1.562"
		LE	—	3.000"	.812"	—
		LF	—	3.000"	—	1.562"
6725 / 6726*	10	LG	.937"	1.000"	—	.812"
		LH	.937"	1.000"	1.469"	—
		LI	.937"	1.000"	—	.812"
6726*	10	LJ	—	3.000"	—	.812"
		LK	—	3.000"	1.469"	—
		LM	—	3.000"	—	.812"
6723 / 6724*	10	LN	.937"	1.000"	—	.812"
		LO	.937"	1.000"	2.469"	—
		LP	.937"	1.000"	1.469"	—
		LQ	.937"	1.000"	—	.812"
6724*	10	LR	—	3.000"	—	.812"
		LS	—	3.000"	2.469"	—
		LT	—	3.000"	1.469"	—
		LU	—	3.000"	—	.812"
6815 / 6830 6816* / 6831*	15	LA	1.406"	1.500"	—	2.125"
		LB	1.406"	1.500"	1.250"	—
		LC	1.406"	1.500"	—	2.125"
6816* / 6831*	15	LD	—	4.500"	—	2.125"
		LE	—	4.500"	1.250"	—
		LF	—	4.500"	—	2.125"
6825 / 6835 6826* / 6836*	15	LG	1.406"	1.500"	—	1.250"
		LH	1.406"	1.500"	2.000"	—
		LI	1.406"	1.500"	—	1.250"
6826* / 6836*	15	LJ	—	4.500"	—	1.250"
		LK	—	4.500"	2.000"	—
		LM	—	4.500"	—	1.250"
6823 / 6833 6824* / 6834*	15	LN	1.406"	1.500"	—	1.250"
		LO	1.406"	1.500"	3.500"	—
		LP	1.406"	1.500"	2.000"	—
		LQ	1.406"	1.500"	—	1.250"
6824* / 6834*	15	LR	—	4.500"	—	1.250"
		LS	—	4.500"	3.500"	—
		LT	—	4.500"	2.000"	—
		LU	—	4.500"	—	1.250"

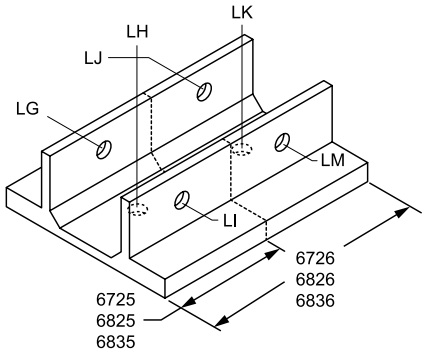

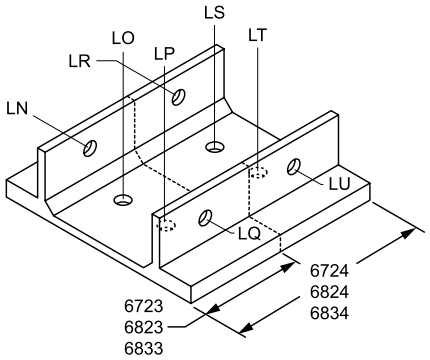

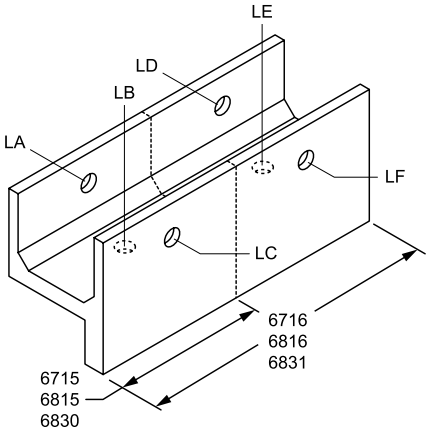

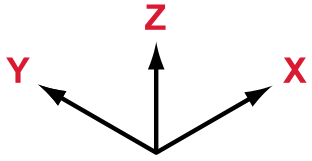

Machining Services

Brake Holes for Linear Bearings (Continued)

Part No.	Series	Hole Diameter	Part No.	Series	Hole Diameter
25-7401	25	6.73mm	40-7400	40	8.73mm

Ordering Example: (1) 25-6724 w/ #25-7401 @ LN, LR, LQ and LU

Metric Part No.	Series	Hole Locations	X	X*	Y	Z
25-6715 / 25-6716*	25	LA	23.50mm	25.00mm	—	39.07mm
		LB	23.50mm	25.00mm	20.56mm	—
		LC	23.50mm	25.00mm	—	39.07mm
25-6716*	25	LD	—	75.00mm	—	39.07mm
		LE	—	75.00mm	20.56mm	—
		LF	—	75.00mm	—	39.07mm
25-6725 / 25-6726*	25	LG	23.50mm	25.00mm	—	20.52mm
		LH	23.50mm	25.00mm	37.05mm	—
		LI	23.50mm	25.00mm	—	20.52mm
25-6726*	25	LJ	—	75.00mm	—	20.52mm
		LK	—	75.00mm	37.05mm	—
		LM	—	75.00mm	—	20.52mm
25-6723 / 25-6724*	25	LN	23.50mm	25.00mm	—	20.52mm
		LO	23.50mm	25.00mm	62.13mm	—
		LP	23.50mm	25.00mm	37.13mm	—
		LQ	23.50mm	25.00mm	—	20.52mm
25-6724*	25	LR	—	75.00mm	—	20.52mm
		LS	—	75.00mm	62.13mm	—
		LT	—	75.00mm	37.13mm	—
		LU	—	75.00mm	—	20.52mm
40-6815 / 40-6830 40-6816* / 40-6831*	40	LA	37.50mm	40.00mm	—	54.38mm
		LB	37.50mm	40.00mm	32.57mm	—
		LC	37.50mm	40.00mm	—	54.38mm
40-6816* / 40-6831*	40	LD	—	120.00mm	—	54.38mm
		LE	—	120.00mm	32.57mm	—
		LF	—	120.00mm	—	54.38mm
40-6825 / 40-6835 40-6826* / 40-6836*	40	LG	37.50mm	40.00mm	—	32.57mm
		LH	37.50mm	40.00mm	51.56mm	—
		LI	37.50mm	40.00mm	—	32.57mm
40-6826* / 40-6836*	40	LJ	—	120.00mm	—	32.57mm
		LK	—	120.00mm	51.56mm	—
		LM	—	120.00mm	—	32.57mm
40-6823 / 40-6833 40-6824* / 40-6834*	40	LN	37.50mm	40.00mm	—	32.57mm
		LO	37.50mm	40.00mm	91.65mm	—
		LP	37.50mm	40.00mm	51.56mm	—
		LQ	37.50mm	40.00mm	—	32.57mm
40-6824* / 40-6834*	40	LR	—	120.00mm	—	32.57mm
		LS	—	120.00mm	91.65mm	—
		LT	—	120.00mm	51.56mm	—
		LU	—	120.00mm	—	32.57mm

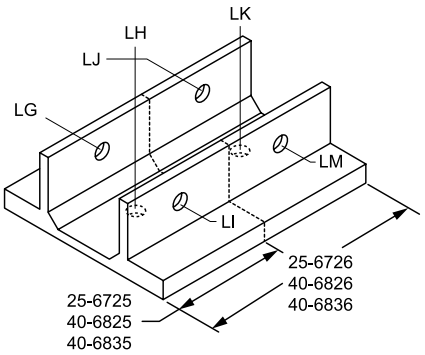

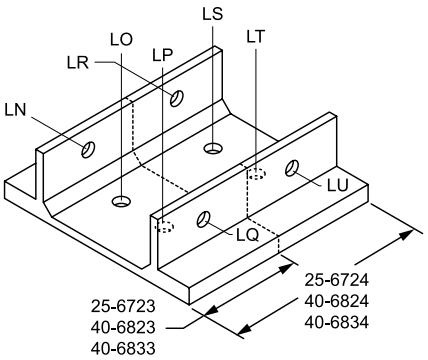

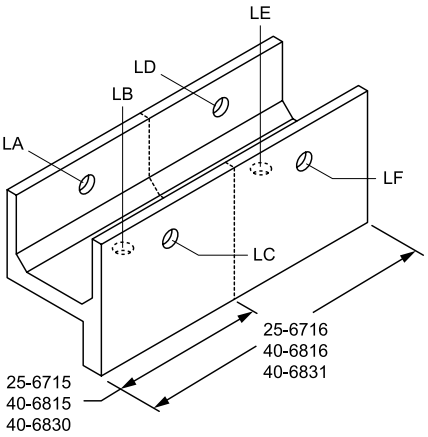

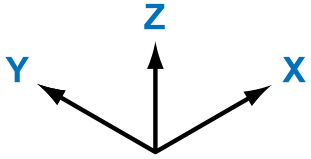

80/20 BUILD YOUR IDEA
More on 80/20® products available at 8020.net

45 Degree Flange Milling

- Allows two Quick Frame profile flanges to intersect at 90 degrees
- Service is for both ends of profile; if one end is desired, specify left or right end and include drawing

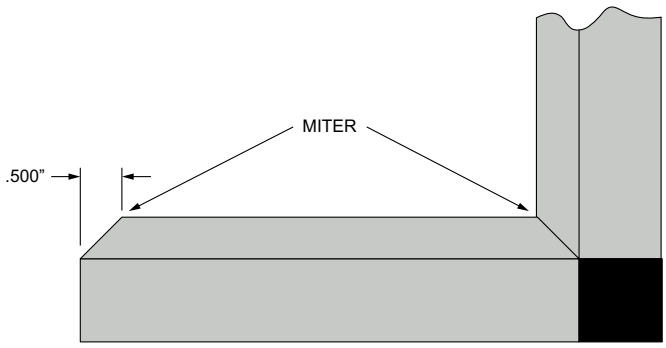

Part No.	Series	Service Type
7300	QF	45 Degree Flange Milling Service for Quick Frame Location A, B or C only
7301	QF	45 Degree Flange Milling Service for Quick Frame Location A and B
7302	QF	45 Degree Flange Milling Service for Quick Frame Location A and C

Ordering Example: (2) #9010 x 22.00" w/ #7300 on A per drawing.

45 Degree Flange Machining Designations

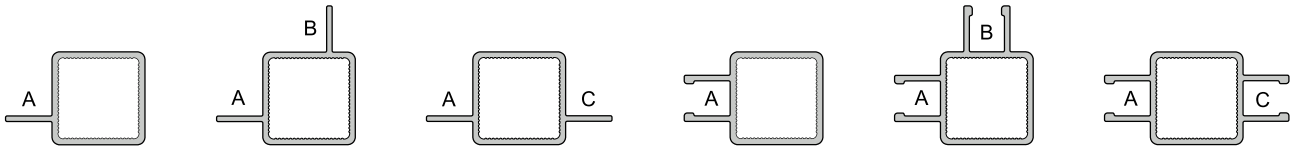

Connector Rod End Tap

- Adds threads to end of connector rod (pg. 8-61)
- When ordering, designate profile end (left, right, or both) that requires tap

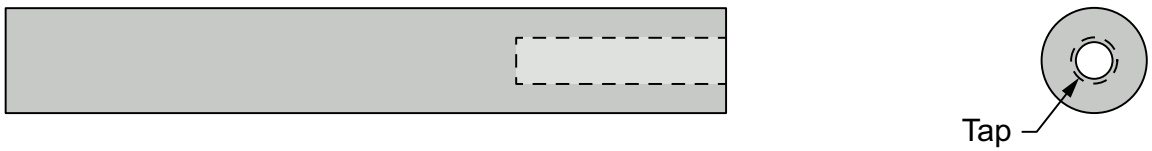

Part No.	Series	Tap Size (Min. Depth)	Taps Per End	Profile Part No.
7105	F RT	5/16-18 (1.25")	1	9820
7106	F RT	M8 x 1.25" (31.75mm)		

Machining Services

Cut Plastic Panel to Size / Aluminum Plate to Size

Panel Part No.	Aluminum Part No.	Series	Service Type	Cut Tolerance
7150	7167	F RT	Cut Plastic Panel or Aluminum Plate **ALL** Sides ≤ 48" for Panels **Up To** .250" Thick	+/- .060"
7155	7168	F RT	Cut Plastic Panel or Aluminum Plate **ANY** Side > 48" for Panels **Up To** .250" Thick	
7151	7169	F RT	Cut Plastic Panel or Aluminum Plate **ALL** Sides ≤ 48" for Panels **Thicker Than** .250"	
7153	7170	F RT	Cut Plastic Panel or Aluminum Plate **ANY** Side > 48" for Panels **Thicker Than** .250"	
65-7150	65-7167	M	Cut Plastic Panel or Aluminum Plate **ALL** Sides ≤ 1220mm for Panels **Up To** 6mm Thick	+/- 1.52mm
65-7155	65-7168	M	Cut Plastic Panel or Aluminum Plate **ANY** Side > 1220mm for Panels **Up To** 6mm Thick	
65-7151	65-7169	M	Cut Plastic Panel or Aluminum Plate **ALL** Sides ≤ 1220mm for Panels **Thicker Than** 6mm	
65-7153	65-7170	M	Cut Plastic Panel or Aluminum Plate **ANY** Side > 1220mm for Panels **Thicker Than** 6mm	

Shear Wire Mesh to Size

Part No.	Series	Service Type	Cut Tolerance
7095	F RT	Shear Wire Mesh **ALL** Sides ≤ 48"	+/- .060"
7100	F RT	Shear Wire Mesh **ANY** Side > 48"	
65-7095	M	Shear Wire Mesh **ALL** Sides ≤ 1220mm	+/- 1.52mm
65-7100	M	Shear Wire Mesh **ANY** Side > 1220mm	

T-Slot Access Routing

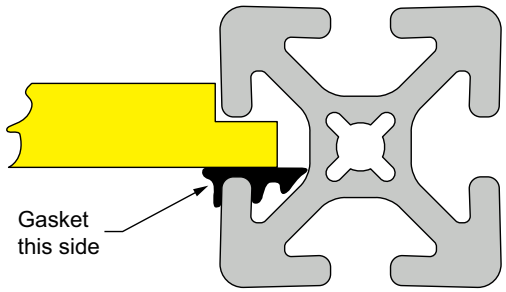

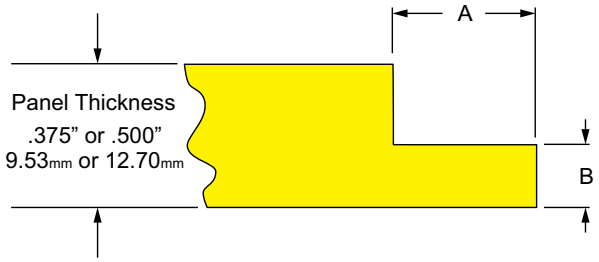

Panel Part No.	Aluminum Part No.	Series	Service Type	Description	A	B	Cut Tolerance
7530	7206	10	Routing Plastic Panel or Aluminum Plate **ALL** Sides ≤ 48"	To Mount 3/8" or 1/2" Plastic Panels or Aluminum Plate	.335"	.177"	**A** +/- .015" **B** +/- .010"
7531	7207	10	Routing Plastic Panel or Aluminum Plate **ANY** Side > 48"				
7532	7208	15	Routing Plastic Panel or Aluminum Plate **ALL** Sides ≤ 48"		.458"	.236"	
7533	7209	15	Routing Plastic Panel or Aluminum Plate **ANY** Side > 48"				
25-7530	25-7206	25	Routing Plastic Panel or Aluminum Plate **ALL** Sides ≤ 1220mm	To Mount 9.53mm or 12.70mm Plastic Panels or Aluminum Plate	9.00mm	4.50mm	**A** +/- .38mm **B** +/- .25mm
25-7531	25-7207	25	Routing Plastic Panel or Aluminum Plate **ANY** Side > 1220mm				
30-7532	30-7208	30	Routing Plastic Panel or Aluminum Plate **ALL** Sides ≤ 1220mm		9.50mm	6.00mm	
30-7533	30-7209	30	Routing Plastic Panel or Aluminum Plate **ANY** Side > 1220mm				
40-7532	40-7208	40	Routing Plastic Panel or Aluminum Plate **ALL** Sides ≤ 1220mm		13.00mm	6.00mm	
40-7533	40-7209	40	Routing Plastic Panel or Aluminum Plate **ANY** Side > 1220mm				
45-7534	---	45	Routing Plastic Panel or Aluminum Plate **ALL** Sides ≤ 1220mm		14.00mm	6.00mm	
45-7535	---	45	Routing Plastic Panel or Aluminum Plate **ANY** Side > 1220mm				

80/20 BUILD YOUR IDEA
More on 80/20® products available at 8020.net

Edge Radius

- Both edges rounded - the radius will be equal to the panel thickness; One edge rounded - radius will equal to half the panel thickness with a minimum panel thickness of .118” (3.00mm)
- Less than all four sides requires drawing designating which sides receive the edge radius service

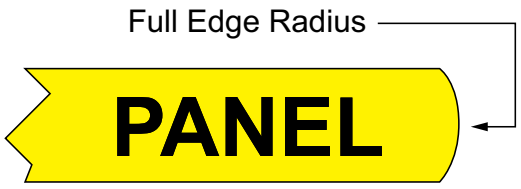

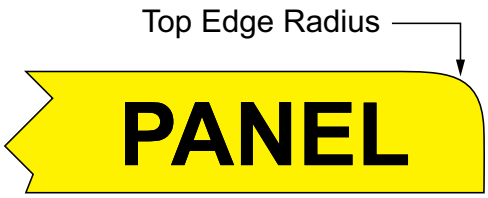

Full Edge Radius

Panels Part No.	Aluminum Part No.	Series	Service Type	Radius Tolerance
7500	7221	F	Full Edge Radius Plastic Panel or Aluminum Plate **ALL** Sides Less Than Or Equal To 48”	+/- .040”
7501	7222	F	Full Edge Radius Plastic Panel or Aluminum Plate **ANY** Side Greater Than 48”	
65-7500	65-7221	M	Full Edge Radius Plastic Panel or Aluminum Plate **ALL** Sides Less Than Or Equal To 1220mm	+/- 1.02mm
65-7501	65-7222	M	Full Edge Radius Plastic Panel or Aluminum Plate **ANY** Side Greater Than 1220mm	

*Minimum Panel Thickness is .118” (3.00mm). Maximum Panel Thickness is .500” (12.7mm).

Top Edge Radius

Panels Part No.	Aluminum Part No.	Series	Service Type	Radius Tolerance
7540	7542	F	Top Edge Radius Plastic Panel or Aluminum Plate **ALL** Sides Less Than Or Equal To 48”	+/- .040”
7541	7543	F	Top Edge Radius Plastic Panel or Aluminum Plate **ANY** Side Greater Than 48”	
65-7540	65-7542	M	Top Edge Radius Plastic Panel or Aluminum Plate **ALL** Sides Less Than Or Equal To 1220mm	+/- 1.02mm
65-7541	65-7543	M	Top Edge Radius Plastic Panel or Aluminum Plate **ANY** Side Greater Than 1220mm	

*Minimum Panel Thickness is .118” (3.00mm). Maximum Panel Thickness is .750” (19.05mm).

Corner Radius

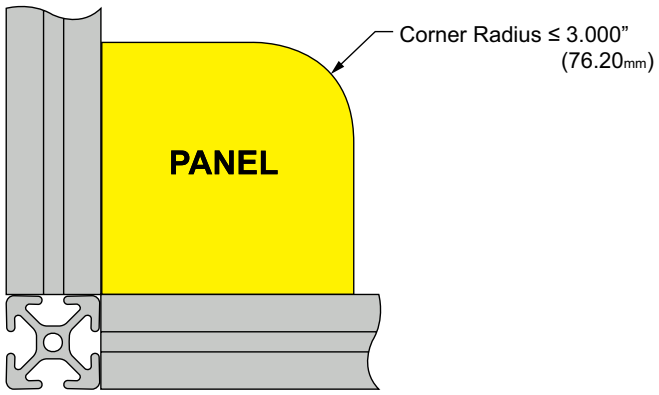

Panel Part No.	Aluminum Part No.	Series	Service Type	Tolerance
7179	7176	F	Corner Radius Plastic Panel or Aluminum Plate **RADIUS** ≤ 3.000” **Up To** .250” Thick	+/- .060”
7187	7195	F	Corner Radius Plastic Panel or Aluminum Plate **RADIUS** ≤ 3.000” **Thicker Than** .250”	
65-7179	65-7176	M	Corner Radius Plastic Panel or Aluminum Plate **RADIUS** ≤ 76.20mm **Up To** 6mm Thick	+/- 1.52mm
65-7187	65-7195	M	Corner Radius Plastic Panel or Aluminum Plate **RADIUS** ≤ 76.20mm **Thicker Than** 6mm	

Machining Services

Profile Corner Clearance Notch

- Used to clear profile corner for perpendicularly mounted T-slot profiles when panel mounts inside T-slot
- Works with mesh, plastic panels, and aluminum up to .250" (6.35mm) thick

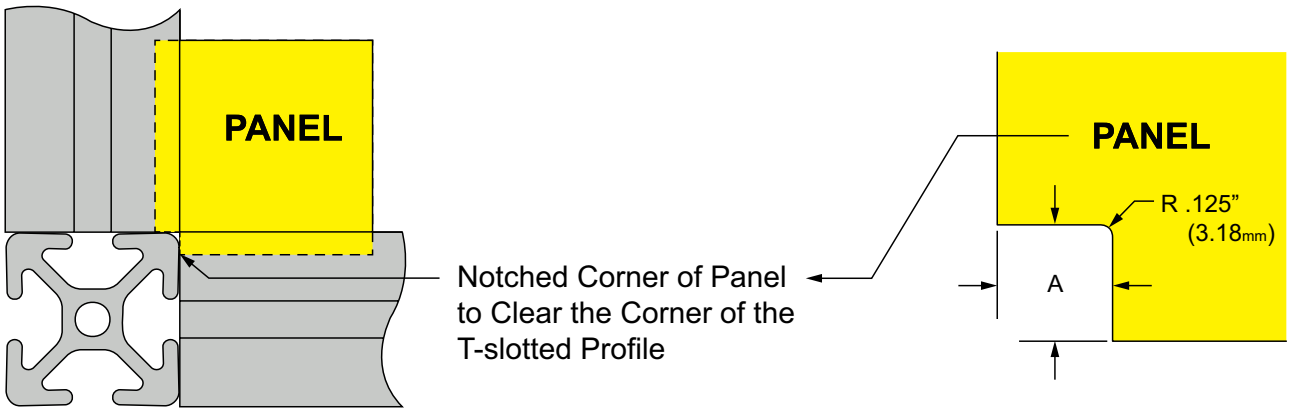

Panel & Wire Part No.	Aluminum Part No.	Series	Service Type	A	Cut Tolerance
7504	7202	10	Corner Notch	.312"	+/- .060"
7505	7203	15		.440"	
20-7504	20-7202	20		6.00mm	+/- 1.52mm
25-7504	25-7202	25		7.90mm	
30-7505	30-7203	30		9.00mm	
40-7505	40-7203	40		11.20mm	
45-7506	---	45		14.00mm	

Ordering Example:
2609 (1) @ (AD) 18.000" x (AB) 18.000"
w/ 7505 Horizontal on Corner B

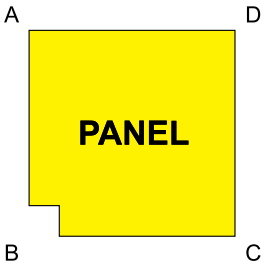

80/20 BUILD YOUR IDEA
More on 80/20® products available at 8020.net

Full Profile Corner Clearance Notch

- Used to clear a T-slot profile when profiles are mounted perpendicularly
- Works with mesh, plastic panels, and aluminum up to .250" (6.35mm) thick

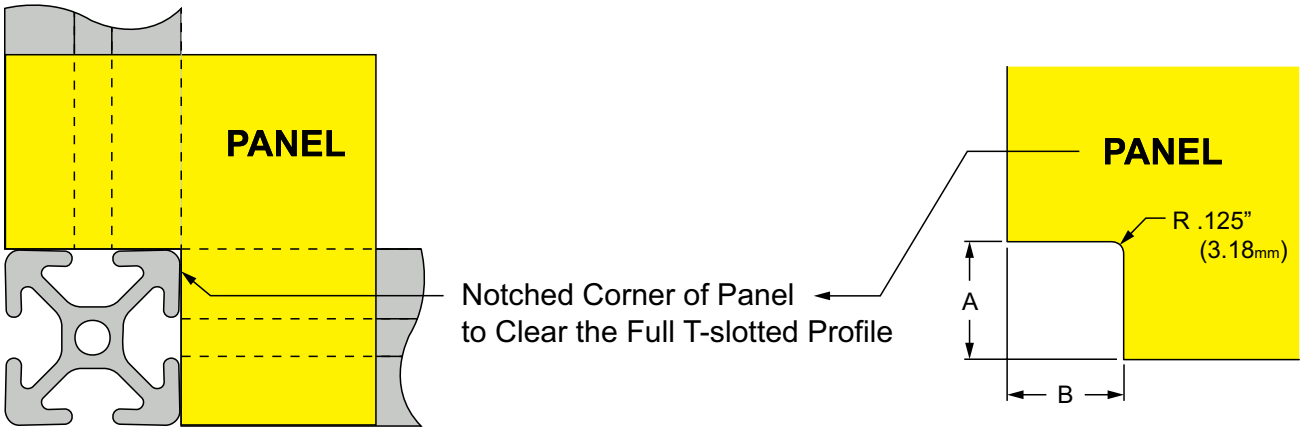

Panel & Wire Part No.	Aluminum Part No.	Series	Applicable Profiles	A	B	Cut Tolerance
7597	7231	10	1001, 1001-S, 1002, 1002-S, 1003, 1003-S, 1004, 1004-S, 1010, 1010-S, 1012, 1012-S	1.060"	1.060"	+/- .060"
7598	7232	10	1020, 1020-S	1.060"	2.060"	
7599	7233	10	2020, 2020-S	2.060"	2.060"	
7600	7234	15 RT	1501, 1501-LS, 1502, 1502-LS, 1503, 1503-LS, 1504, 1504-LS, 1515, 1515-S, 1515-Lite, 1515-LS, 1515-UL, 1515-ULS, 1517, 1517-LS, 1547	1.560"	1.560"	
7601	7235	15	1530, 1530-Lite, 1530-LS, 1530-S, 1530-UL, 1530-ULS	1.560"	3.060"	
7602	7236	15	3030, 3030-Lite, 3030-S, 3030-LS	3.060"	3.060"	
20-7597	20-7231	20	20-2020	21.52mm	21.52mm	+/- 1.52mm
25-7597	25-7231	25	25-2501, 25-2502, 25-2503, 25-2504, 25-2525, 25-2527	26.52mm	26.52mm	
25-7598	25-7232	25	25-2550	26.52mm	51.52mm	
25-7599	25-7233	25	25-5050	51.52mm	51.52mm	
30-7600	30-7234	30	30-3001, 30-3002, 30-3003, 30-3004, 30-3030, 30-3022	31.52mm	31.52mm	
40-7600	40-7234	40	40-4001, 40-4002, 40-4003, 40-4004, 40-4030-Lite, 40-4040, 40-4040-Lite, 40-4040-UL, 40-4045-Lite	41.52mm	41.52mm	
40-7601	40-7235	40	40-4080, 40-4080-Lite	41.52mm	81.52mm	
40-7602	40-7236	40	40-8080	81.52mm	81.52mm	
45-7603	45-7237	45	45-4545, 45-4545-Lite	46.52mm	46.52mm	
45-7604	45-7233	45	45-4590	46.52mm	91.52mm	
45-7605	45-7239	45	45-9090	91.52mm	91.52mm	

Ordering Example:
2609 (1) @ (AD) 18.000" x (AB) 22.000"
w/ 7600 on Corner B

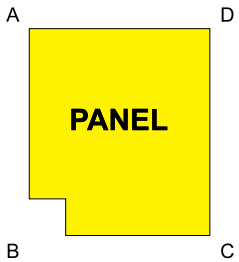

Machining Services

End Fastener Clearance Notch

- Used to clear end fastener tab (pg. 3-16) when a panel mounts inside T-slot
- Works with mesh, plastic panels, and aluminum up to .250" (6.35mm) thick

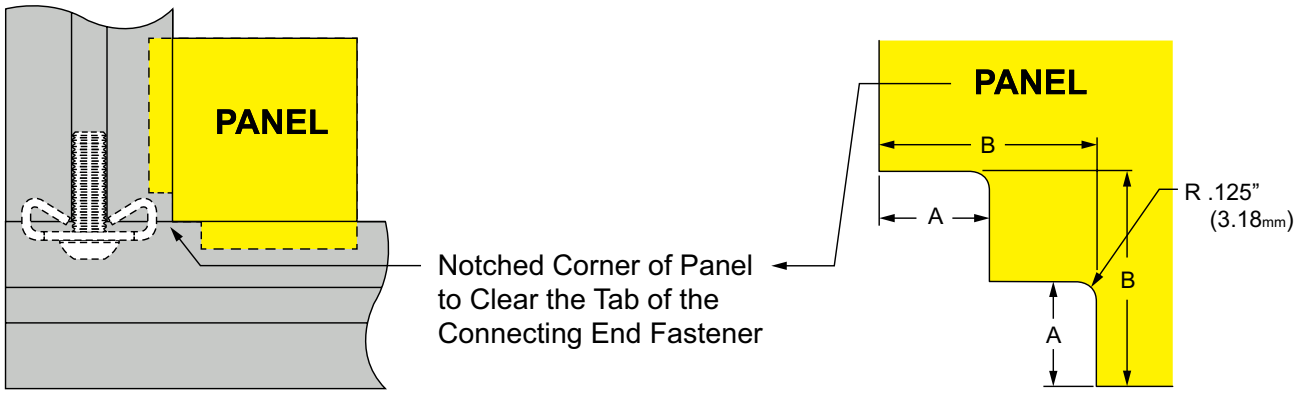

Panel & Wire Part No.	Aluminum Part No.	Series	Service Type	A	B	Cut Tolerance
7502	7211	10	Corner Notch	.250"	.650"	+/- .060"
7503	7214	15		.340"	.650"	
20-7512	20-7211	20		5.10mm	13.50mm	+/- 1.52mm
25-7502	25-7211	25		6.40mm	16.50mm	
30-7503	30-7214	30		8.60mm	14.50mm	
40-7503	40-7214	40		8.60mm	16.50mm	

Ordering Example:
2609 (1) @ (AD) 22.000" x (AB) 18.000"
w/ 7503 on Corner B

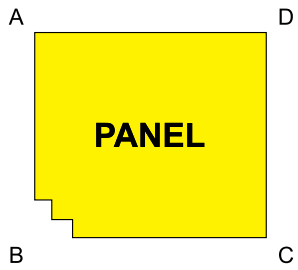

80/20 BUILD YOUR IDEA
More on 80/20® products available at 8020.net

Anchor Fastener Clearance Notch

- Used to clear an anchor fastener (pg. 3-12) when a panel will mount inside a T-slot
- Works with mesh, plastic panels, and aluminum up to .250” (6.35mm) thick
- When ordering, specify a vertical or horizontal orientation

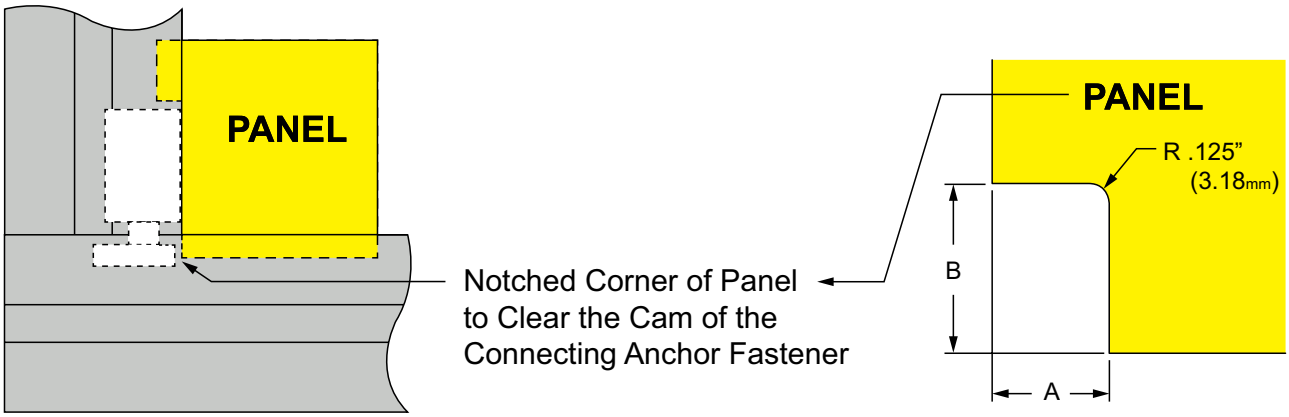

Panel & Wire Part No.	Aluminum Part No.	Series	Service Type	A	B	Cut Tolerance
7311	7215	10	Corner Notch	.375”	1.063”	+/- .060”
7312	7216	15		.500”	1.750”	
20-7311	20-7215	20		8.00mm	24.00mm	+/- 1.52mm
25-7311	25-7215	25		9.50mm	27.00mm	
30-7312	30-7216	30		11.00mm	34.00mm	
40-7312	40-7216	40		12.70mm	44.50mm	

Ordering Example:
2609 (1) @ (AD) 18.000” x (AB) 21.000”
w/ 7312 Vertical on Corner B

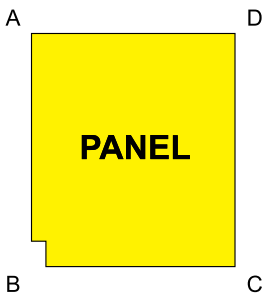

Machining Services

Central Connector Clearance Notch

- Used to clear central connector (pg. 3-22) when a panel mounts inside T-slot
- Works with mesh, plastic panels, and aluminum up to .250" (6.35mm) thick
- When ordering, specify a vertical or horizontal orientation

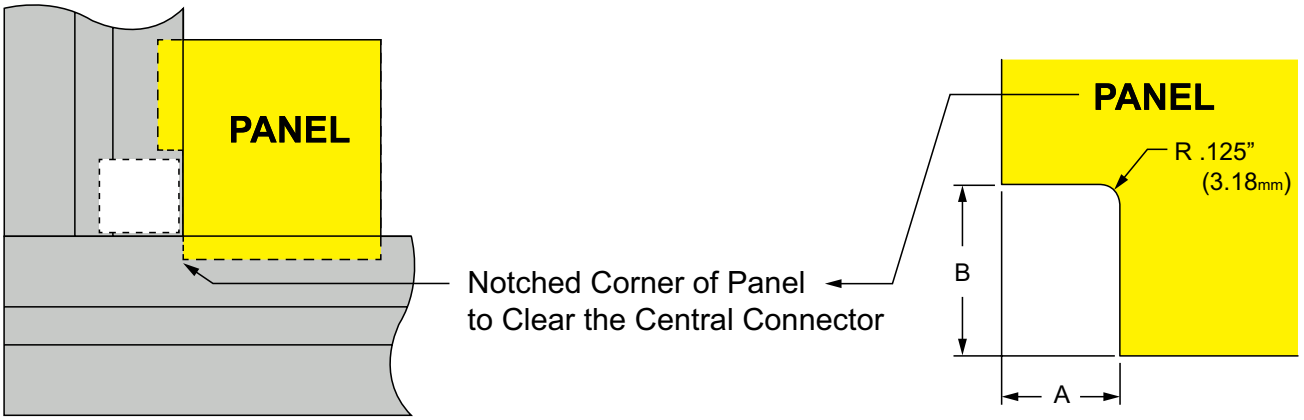

Panel & Wire Part No.	Aluminum Part No.	Series	Service Type	A	B	Cut Tolerance
7320	7204	15	Corner Notch	.500"	2.000"	+/- .060"
30-7320	30-7204	30		8.50mm	31.50mm	+/- 1.52mm
40-7320	40-7204	40		12.70mm	50.80mm	+/- 1.52mm
45-7320	45-7204	45		14.00mm	46.00mm	+/- 1.52mm

Ordering Example:
2609 (1) @ (AD) 23.000" x (AB) 28.000"
w/7320 Vertical on Corner B

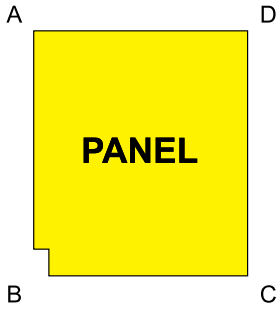

80/20 BUILD YOUR IDEA
More on 80/20® products available at 8020.net

Corner Connector Clearance Notch

- Used to clear corner connector tabs (pg. 3-122) when a panel mounts inside T-slot
- Works with mesh, plastic panels, and aluminum up to .250” (6.35mm) thick

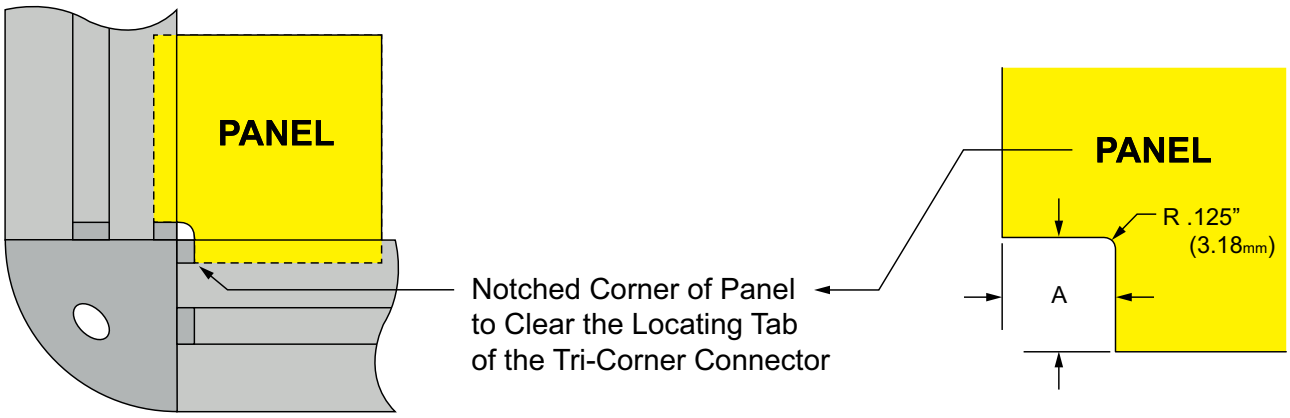

Panel & Wire Part No.	Aluminum Part No.	Series	Service Type	A	Cut Tolerance
7515	7217	10	Corner Notch	.347”	+/- .060”
7516	7218	15		.500”	
25-7515	25-7217	25		8.81mm	+/- 1.52mm
40-7516	40-7218	40		14.75mm	

Ordering Example:
2609 (1) @ (AD) 18.000” x (AB) 18.000”
w/ 7515 on Corner B

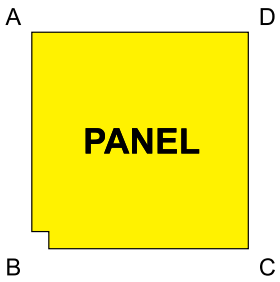

Machining Services

Inside Corner Connector Clearance Notch

- Used to clear inside corner connector (pg. 3-21) when a panel mounts inside T-slot
- Works with mesh, plastic panels, and aluminum up to .250" (6.35mm) thick

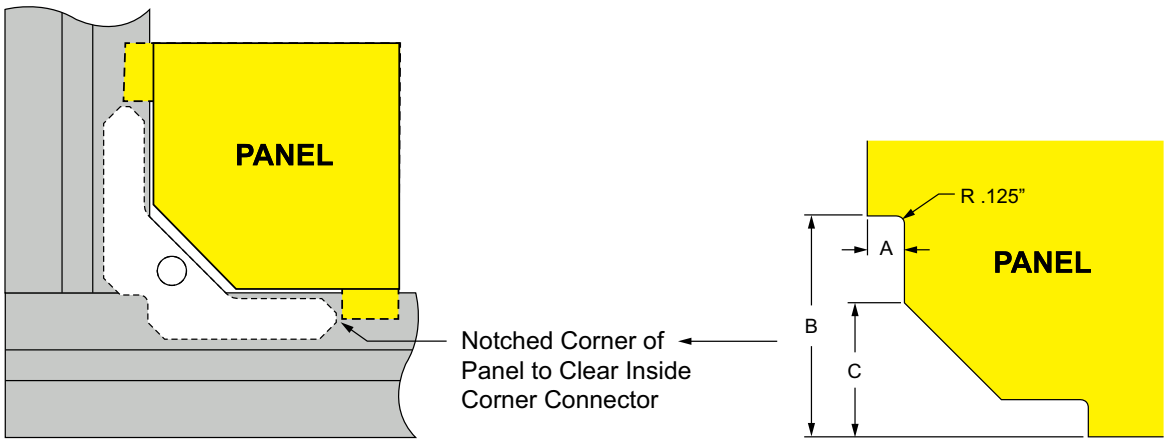

Panel & Wire Part No.	Aluminum Part No.	Series	Service Type	A	B	C	Cut Tolerance
7161	7219	15 40	Corner Notch	.435"	2.500"	1.393"	+/- .060"

Ordering Example:
2609 (1) @ (AD) 22.000" x (AB) 18.000"
w/ 7161 on Corner B

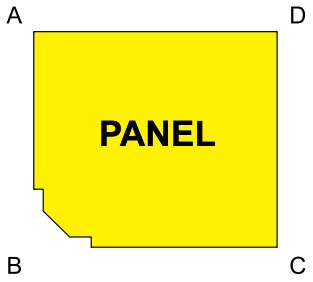

80/20 BUILD YOUR IDEA
More on 80/20® products available at 8020.net

Hidden Corner Connector Clearance Notch

- Used to clear hidden corner connector (pg. 3-19) when a panel mounts inside T-slot; two styles available
- When ordering, specify a vertical or horizontal orientation

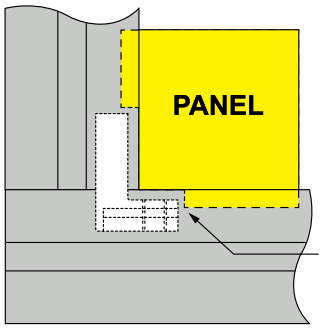

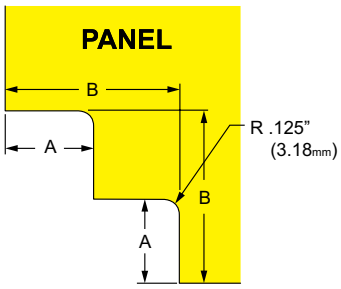

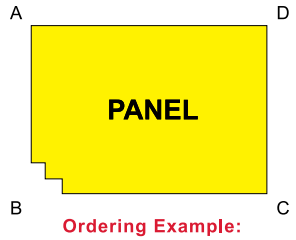

Ordering Example:
2609 (1) @ (AD) 22.000" x (AB) 18.000"
w/ 7522 on Corner B

Inside to Inside: 7422, 7522, 25-7422, 30-7522, 40-7522, 45-7522

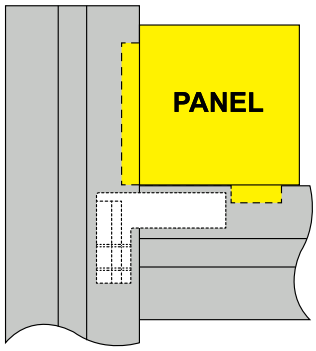

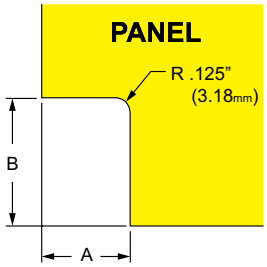

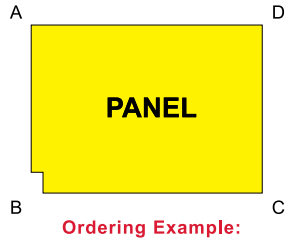

Ordering Example:
2609 (1) @ (AD) 18.000" x (AB) 21.000"
w/ 7523 Vertical on Corner B

Inside to Outside: 7423, 7523, 25-7423 30-7523, 40-7523, 45-7523

Panel & Wire Part No.	Series	Service Type	Connector Part No.	A	B	Cut Tolerance
7422	10	Corner Notch for Inside to Inside Hidden Connector	33440	.315"	1.063"	+/- .060"
7423	10	Corner Notch for Inside to Outside Hidden Connector	33460	.315"	1.063"	
7522	15	Corner Notch for Inside to Inside Hidden Connector	33450	.405"	1.263"	
7523	15	Corner Notch for Inside to Outside Hidden Connector	33470	.405"	1.263"	
25-7422	25	Corner Notch for Inside to Inside Hidden Connector	33440	8.00mm	27.00mm	+/- 1.52mm
25-7423	25	Corner Notch for Inside to Outside Hidden Connector	33460	8.00mm	27.00mm	
30-7522	30	Corner Notch for Inside to Inside Hidden Connector	33450	8.25mm	30.04mm	
30-7523	30	Corner Notch for Inside to Outside Hidden Connector	33470	8.25mm	30.04mm	
40-7522	40	Corner Notch for Inside to Inside Hidden Connector	33450	11.76mm	33.55mm	
40-7523	40	Corner Notch for Inside to Outside Hidden Connector	33470	11.76mm	33.55mm	
45-7522	45	Corner Notch for Inside to Inside Hidden Connector	33490	12.75mm	41.76mm	
45-7523	45	Corner Notch for Inside to Outside Hidden Connector	33530	12.75mm	41.76mm	

Machining Services

Bolt Connector / Plate Connector Clearance Notch

- Used to clear bolt connector (pg. 3-23) or plate connector (pg. 3-25) when a panel mounts inside T-slot
- Works with mesh and plastic panels up to 6mm thick
- When ordering, specify a vertical or horizontal orientation

Bolt Connector Clearance Notch

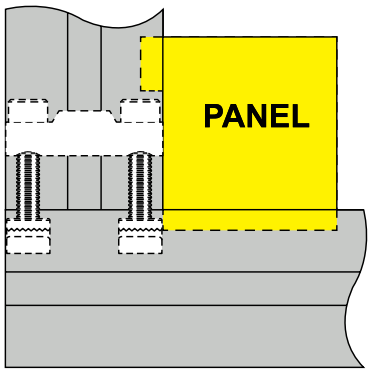

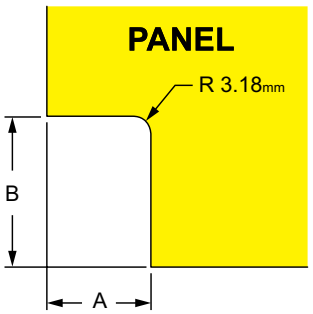

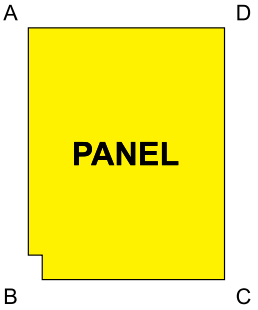

Ordering Example:
65-2609 (1) @ (AD) 580.00mm x (AB) 720.00mm
w/ 30-7314 Vertical on Corner B

Panel & Wire Part No.	Series	Service Type	A	B	Cut Tolerance
30-7314	30	Corner Notch	11.00mm	30.00mm	+/- 1.52mm
45-7317	45		14.00mm	47.00mm	

Plate Connector Clearance Notch

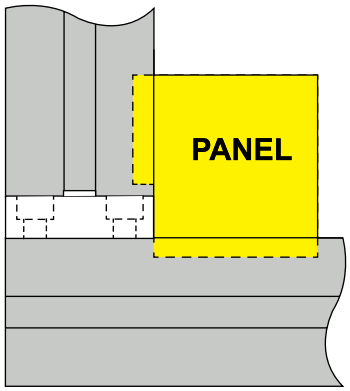

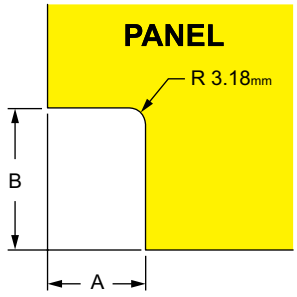

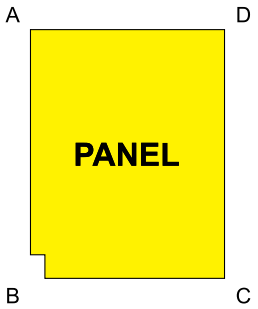

Ordering Example:
65-2609 (1) @ (AD) 580.00mm x (AB) 720.00mm
w/ 45-7323 Horizontal on Corner B

Panel & Wire Part No.	Series	Service Type	A	B	Cut Tolerance
45-7323	45	Corner Notch	14.00mm	27.00mm	+/- 1.52mm

80/20 BUILD YOUR IDEA
More on 80/20® products available at 8020.net

Grabber™ Door Catch / Locking Grabber™ Handle Panel Milling

- Used to add handle to a plastic panel or aluminum plate
- Provides clearance for the Grabber™ door catch (pg. 4-126) and quick installation of Locking Grabber™ Handle (pg. 4-116)

Grabber™ Door Catch Panel Milling

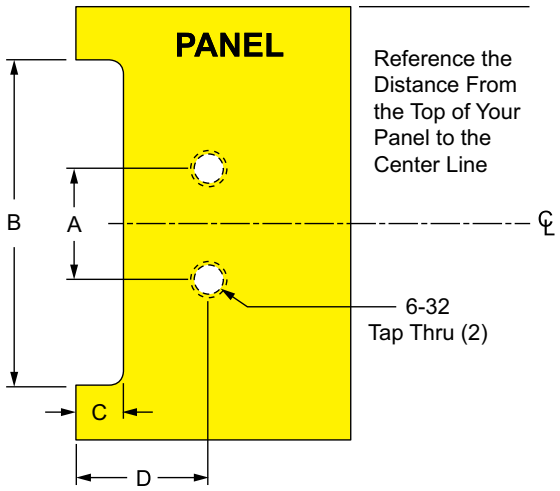

Part No.	Series	A	B	C	D	Cut Tolerance
7313	F	1.600"	4.750"	.313"	1.125"	+/- .020"
65-7313	M	40.60mm	120.70mm	8.00mm	28.60mm	+/- .50mm

Ordering Example:
2609 (1) @ (AD) 18.000" x (AB) 22.000"
w/ 7313 on Side AB @ 12.000"

(All machining center lines will be called out from point "A" on the panel)

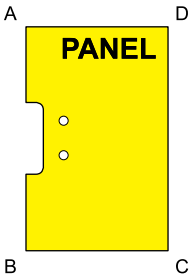

Locking Grabber™ Handle Panel Milling

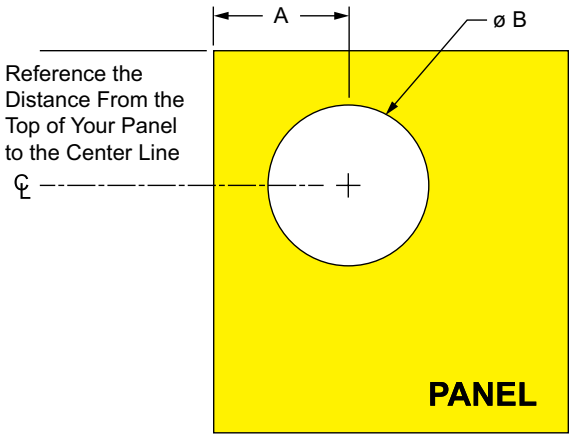

Part No.	Series	A	B	Hole Location Tolerance
7510	F	2.000"	2.000"	+/- .010"
65-7510	M	50.80mm	50.80mm	+/- .25mm

Ordering Example:
2609 (1) @ (AD) 18.000" x (AB) 18.000"
w/ 7510 on Side AB @ 9.000"

(All machining center lines will be called out from point "A" on the panel)

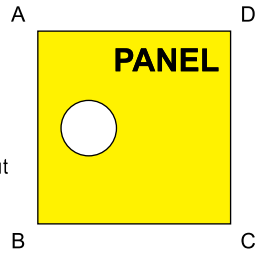

Machining Services

Flush Handle Plastic Panel Milling

- Used with plastic panels to provide slot for quick installation of flush plastic panel handle (pg. 4-114)

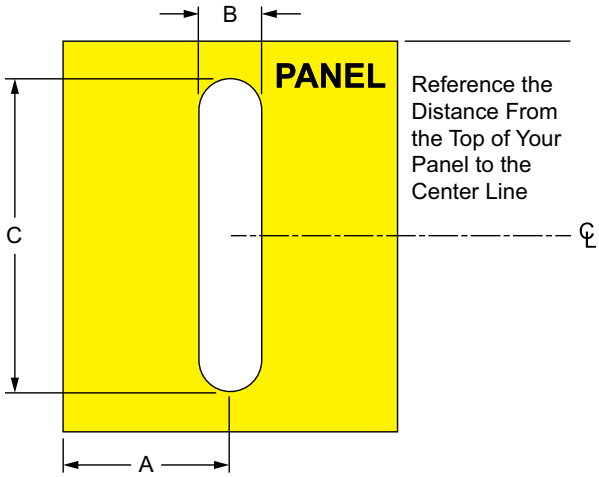

Part No.	Series	Handle Part No.	A	B	C	Hole Location Tolerance
7520	F	2056	2.000"	.625"	3.000"	+/- .010"
7521	F	2058	2.000"	.625"	4.125"	
65-7520	M	65-2056	50.80mm	15.88mm	76.20mm	+/- .25mm
65-7521	M	65-2058	50.80mm	15.88mm	104.78mm	

Ordering Example:
2609 (1) @ (AD) 18.000" x (AB) 20.000"
w/ 7520 side AB @ 10.000"

(All machining center lines will be called out from point "A" on the panel)

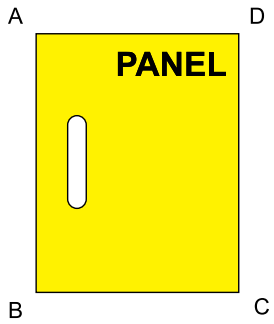

80/20 BUILD YOUR IDEA
More on 80/20® products available at 8020.net

Adjustable Tension and Detent Hinge Plastic Panel Milling

- Creates through holes for mounting adjustable tension hinge (pg. 4-91) and detent panel hinge (pg. 4-92)

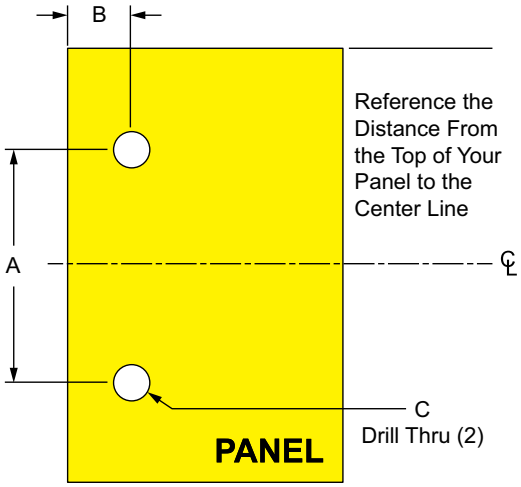

Part No.	Series	Hinge Part No.	Hinge Type	A	B	C	Hole Location Tolerance
7581	10	2081	Adjustable	1.250"	.438"	.201"	+/- .010"
7582	10	2071	Detent	1.250"	.440"	.188"	
7580	15	2080	Adjustable	1.880"	.688"	.375"	
7583	15	2091	Detent	1.340"	.530"	.250"	
25-7581	25	25-2081	Adjustable	31.75mm	11.13mm	5.11mm	+/- .25mm
25-7582	25	25-2071	Detent	31.75mm	11.18mm	4.78mm	
40-7580	40	40-2080	Adjustable	47.75mm	17.48mm	9.53mm	
40-7583	40	40-2091	Detent	34.04mm	13.46mm	6.35mm	

Ordering Example:
2609 (1) @ (AD) 18.000" x (AB) 20.000"
w/ 7581 on Side AB @ 5.000"

(All machining center lines will be called out from point "A" on the panel)

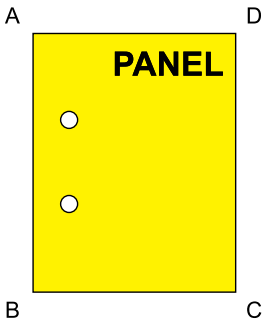

Machining Services

Plastic Door Handle / Steel Door Handle Plastic Panel Milling

- Provides through holes for mounting plastic door handle (pg. 4-108) and steel door handle (pg. 4-113)

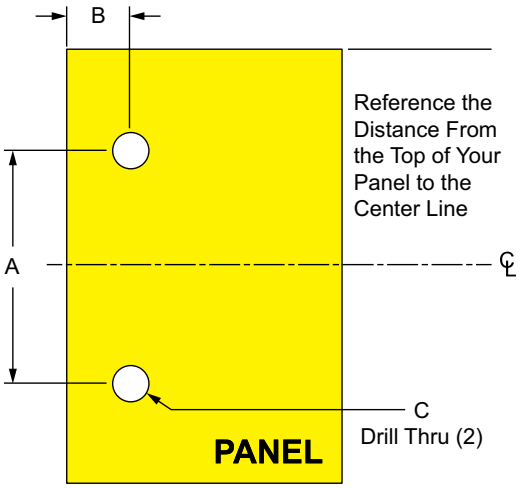

Plastic Door Handle

Part No.	Series	Handle Part No.	A	B	C	Hole Location Tolerance
7586	F	2062 / 2882	3.678"	1.250"	.313"	+/- .010"
7585	F	2061 / 2881	4.600"	1.250"	.375"	
7584	F	2060 / 2880	7.050"	1.250"	.375"	
25-7586	M	25-2062 / 25-2882	93.42mm	31.75mm	7.95mm	+/- .25mm
40-7585	M	40-2061 / 40-2881	116.84mm	31.75mm	9.53mm	
40-7584	M	40-2060 / 40-2880	179.04mm	31.75mm	9.53mm	

Steel Door Handle

Part No.	Series	Handle Part No.	A	B	C	Hole Tolerance
7587	F	2070	3.000"	1.000"	.188"	+/- .010"
65-7587	M	65-2070	76.20mm	25.40mm	4.78mm	+/- .25mm

Ordering Example:
2609 (1) @ (AD) 18.000" x (AB) 20.000"
w/ 7584 on Side AB @ 10.000"

(All machining center lines will be called out from point "A" on the panel)

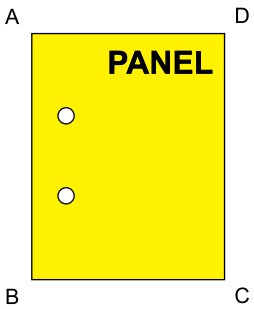

80/20 BUILD YOUR IDEA
More on 80/20® products available at 8020.net

Panel Mount Block Plastic Panel Milling

- Provides through holes for mounting plastic panel to panel mount block (pg. 4-28)

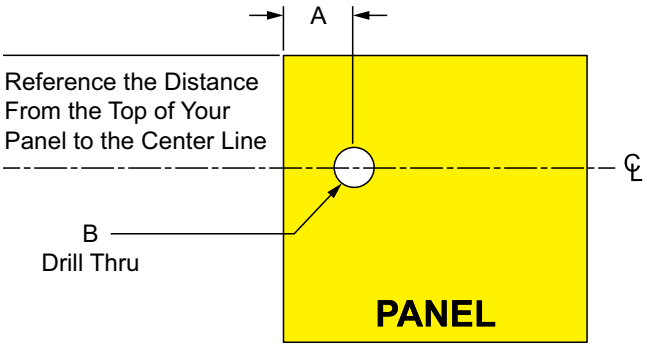

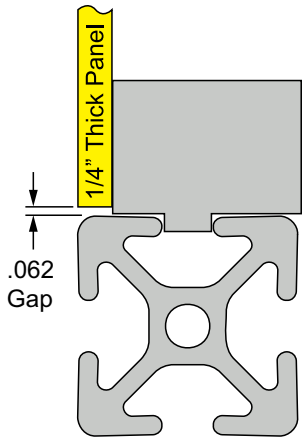

Part No.	Series	A	B	Hole Location Tolerance
7589	10	.313"	.313"	+/- .010"
7588	15	.375"	.375"	
25-7589	25	8.48mm	8.00mm	+/- .25mm
40-7588	40	10.08mm	10.00mm	

Ordering Example:
2609 (1) @ (AD) 18.000" x (AB) 18.000"
w/ 7589 on Side AB @ 9.000"

(All machining center lines will be called out
from point "A" on the panel)

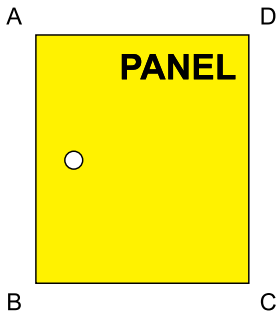

Machining Services

Panel Retainer Milling

- Provides through holes for a single arm narrow or wide retainer (pg. 4-40)

Single Arm Narrow Panel Retainer

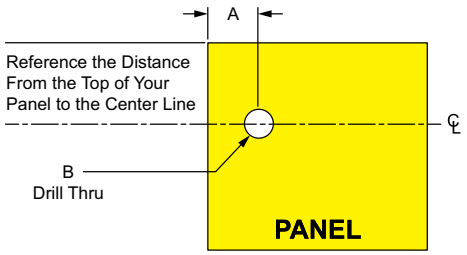

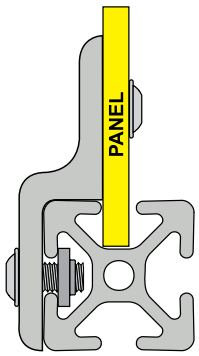

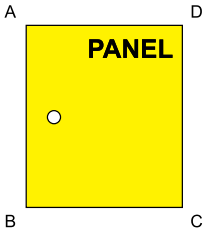

Ordering Example:
2609 (1) @ (AD) 18.000" x (AB) 18.000"
w/ 7593 on Side AB @ 4.500"

(All machining center lines will be called out from point "A" on the panel)

Part No.	Series	Retainer Part No.	A	B	Hole Location Tolerance
7593	10	2496 / 2512	.868"	.313"	+/- .010"
7595	15	2434 / 2515	1.290"	.375"	
20-7593	20	20-2496	16.80mm	6.15mm	+/- .25mm
25-7593	25	25-2496 / 25-2512	22.50mm	7.92mm	
30-7595	30	30-2434	24.80mm	9.52mm	
40-7595	40	40-2434 / 40-2515	35.50mm	9.52mm	
45-7595	45	45-2434	37.80mm	9.52mm	

Single Arm Wide Panel Retainer

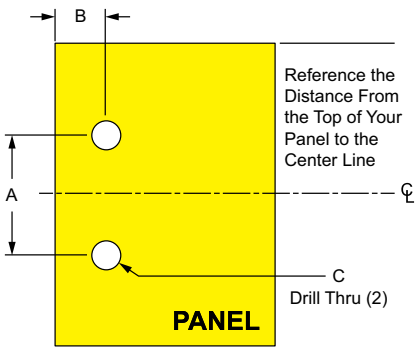

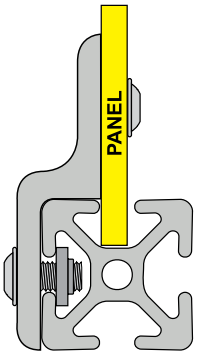

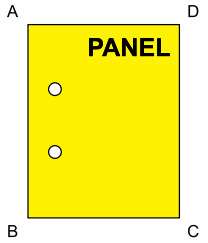

Ordering Example:
2609 (1) @ (AD) 18.000" x (AB) 20.000"
w/ 7594 on Side AB @ 8.000"

(All machining center lines will be called out from point "A" on the panel)

Part No.	Series	Retainer Part No.	A	B	C	Hole Location Tolerance
7594	10	2497 / 2513	1.000"	.868"	.313"	+/- .010"
7596	15	2433 / 2516	1.500"	1.290"	.375"	
20-7594	20	20-2497	20.00mm	16.80mm	6.15mm	+/- .25mm
25-7594	25	25-2497 / 25-2513	25.40mm	22.50mm	7.92mm	
30-7596	30	30-2433	30.00mm	24.80mm	9.52mm	
40-7596	40	40-2433 / 40-2516	38.10mm	35.50mm	9.52mm	
45-7596	45	45-2433	45.00mm	37.80mm	9.52mm	

80/20 BUILD YOUR IDEA
More on 80/20® products available at 8020.net

Plastic Panel / Aluminum Plate Cutout

- Provides opening commonly used for adding a door or access point
- Drawing is required with this machining service; for project design assistance contact a Design Technician at www.8020.net

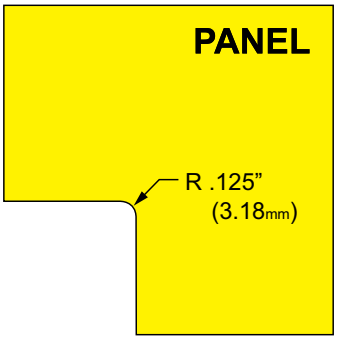

2 Sided Cutout

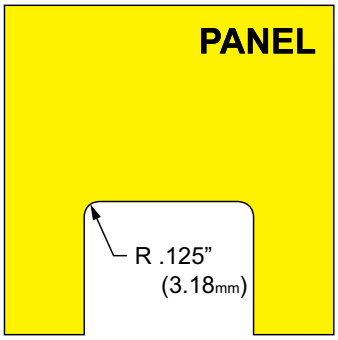

3 Sided Cutout

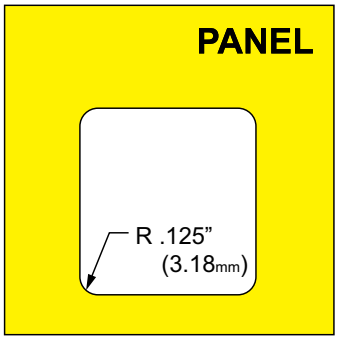

4 Sided Cutout

2 Sided Cutout

Panel Part No.	Aluminum Part No.	Series	Service Type	Cut Tolerance
7162	7171	F RT	2 Sided Cutout **ANY** Dimensions > 3.000" **Up To** .250" Thick	+/- .040"
7182	7190	F	2 Sided Cutout **ANY** Dimensions > 3.000" **Thicker Than** .250"	
65-7162	65-7171	M	2 Sided Cutout **ANY** Dimensions > 80mm **Up To** 6mm Thick	+/- 1.02mm
65-7182	65-7190	M	2 Sided Cutout **ANY** Dimensions > 80mm **Thicker Than** 6mm	

3 Sided Cutout

Panel Part No.	Aluminum Part No.	Series	Service Type	Cut Tolerance
7163	7172	F RT	3 Sided Cutout **ANY** Dimensions > 3.000" **Up To** .250" Thick	+/- .040"
7183	7191	F	3 Sided Cutout **ANY** Dimensions > 3.000" **Thicker Than** .250"	
65-7163	65-7172	M	3 Sided Cutout **ANY** Dimensions > 80mm **Up To** 6mm Thick	+/- 1.02mm
65-7183	65-7191	M	3 Sided Cutout **ANY** Dimensions > 80mm **Thicker Than** 6mm	

4 Sided Cutout

Panel Part No.	Aluminum Part No.	Series	Service Type	Cut Tolerance
7164	7173	F RT	4 Sided Cutout **ANY** Dimensions > 3.000" **Up To** .250" Thick	+/- .040"
7184	7192	F	4 Sided Cutout **ANY** Dimensions > 3.000" **Thicker Than** .250"	
65-7164	65-7173	M	4 Sided Cutout **ANY** Dimensions > 80mm **Up To** 6mm Thick	+/- 1.02mm
65-7184	65-7192	M	4 Sided Cutout **ANY** Dimensions > 80mm **Thicker Than** 6mm	

Machining Services

Top Mount Milling for Plastic Panel or Aluminum Plate

- Provides clearance to mount panel or plate to face of profile
- Thickness of panel or plate must be .250" (6mm) or thicker

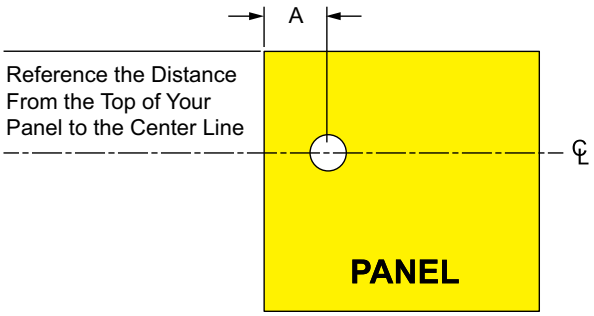

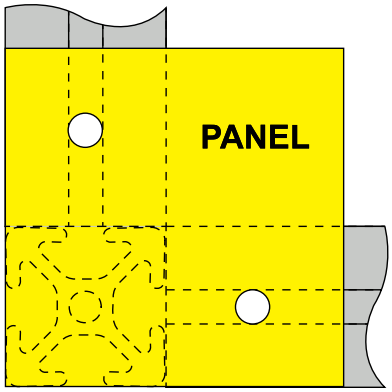

Part No.	Series	Service Type	A	Hole Location Tolerance
7507	10	Drill Thru 0.281" Panel 1/2" from Edge	.500"	+/- .010"
7509	10	Drill Thru & Countersink for 1/4" FHSCS - 1/2" from Edge	.500"	
7508	15	Drill Thru 0.328" Panel 3/4" from Edge	.750"	
7511	15	Drill Thru & Countersink for 5/16" FHSCS - 3/4" from Edge	.750"	
7512	15	Drill Thru & Countersink for 1/4" FHSCS - 3/4" from Edge	.750"	
20-7507	20	Drill Thru 5.56mm Panel 10.00mm from Edge	10.00mm	+/- .25mm
20-7509	20	Drill Thru & Countersink for M5 FHSCS - 10.00mm from Edge	10.00mm	
25-7507	25	Drill Thru 7.14mm Panel 12.50mm from Edge	12.50mm	
25-7509	25	Drill Thru & Countersink for M6 FHSCS - 12.50mm from Edge	12.50mm	
30-7508	30	Drill Thru 8.33mm Panel 15.00mm from Edge	15.00mm	
30-7511	30	Drill Thru & Countersink for M8 FHSCS - 15.00mm from Edge	15.00mm	
30-7512	30	Drill Thru & Countersink for M6 FHSCS - 15.00mm from Edge	15.00mm	
40-7508	40	Drill Thru 8.33mm Panel 20.00mm from Edge	20.00mm	
40-7511	40	Drill Thru & Countersink for M8 FHSCS - 20.00mm from Edge	20.00mm	
40-7512	40	Drill Thru & Countersink for M6 FHSCS - 20.00mm from Edge	20.00mm	
45-7508	45	Drill Thru 8.33mm Panel 22.50mm from Edge	22.50mm	
45-7511	45	Drill Thru & Countersink for M8 FHSCS - 22.50mm from Edge	22.50mm	
45-7512	45	Drill Thru & Countersink for M6 FHSCS - 22.50mm from Edge	22.50mm	

Ordering Example:
2609 (1) @ (AD) 18.000" x (AB) 18.000"
w/ 7589 on Side AB @ 9.000"

(All machining center lines will be called out from point "A" on the panel)

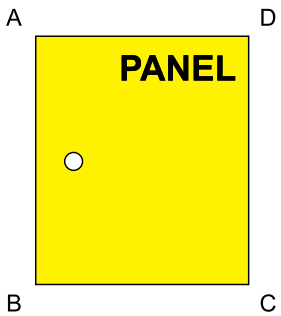

80/20 BUILD YOUR IDEA
More on 80/20® products available at 8020.net

Miscellaneous Panel Milling Services

Circular Cutout Plastic Panel or Aluminum Plate

Panel Part No.	Aluminum Part No.	Series	Service Type	Tolerance
7152	7175	F	Circular Cutout Plastic Panel or Aluminum Plate > 1.000" Not to Exceed 10" **Up To** .250" Thick	+/- .010"
7186	7194	F	Circular Cutout Plastic Panel or Aluminum Plate > 1.000" Not to Exceed 10" **Thicker Than** .250"	
65-7152	65-7175	M	Circular Cutout Plastic Panel or Aluminum Plate > 25mm Not to Exceed 250mm **Up To** 6mm Thick	+/- .25mm
65-7186	65-7194	M	Circular Cutout Plastic Panel or Aluminum Plate > 25mm Not to Exceed 250mm **Thicker Than** 6mm	

Drill Thru Plastic Panel or Aluminum Plate

Panel Part No.	Aluminum Part No.	Series	Service Type	Tolerance
7159	7180	F	Drill Thru Plastic Panel or Aluminum Plate **Up To** .250" Thick	+/- .010"
7200	7198	F	Drill Thru Plastic Panel or Aluminum Plate **Thicker Than** .250"	
65-7159	65-7180	M	Drill Thru Plastic Panel or Aluminum Plate **Up To** 6mm Thick	+/- .25mm
65-7200	65-7198	M	Drill Thru Plastic Panel or Aluminum Plate **Thicker Than** 6mm	

Drill Thru and Countersink Plastic Panel or Aluminum Plate

Panel Part No.	Aluminum Part No.	Series	Service Type	Tolerance
7156	7177	F	Drill Thru & Countersink Plastic Panel or Aluminum Plate **Up To** .250" Thick	+/- .010"
7188	7196	F	Drill Thru & Countersink Plastic Panel or Aluminum Plate **Thicker Than** .250"	
65-7156	65-7177	M	Drill Thru & Countersink Plastic Panel or Aluminum Plate **Up To** 6mm Thick	+/- .25mm
65-7188	65-7196	M	Drill Thru & Countersink Plastic Panel or Aluminum Plate **Thicker Than** 6mm	

Drill Thru and Tap Plastic Panel or Aluminum Plate

Panel Part No.	Aluminum Part No.	Series	Service Type	Tolerance
7158	7178	F	Drill Thru & Tap Plastic Panel or Aluminum Plate **Up To** .250" Thick	+/- .010"
7189	7197	F	Drill Thru & Tap Plastic Panel or Aluminum Plate **Thicker Than** .250"	
65-7158	65-7178	M	Drill Thru & Tap Plastic Panel or Aluminum Plate **Up To** 6mm Thick	+/- .25mm
65-7189	65-7197	M	Drill Thru & Tap Plastic Panel or Aluminum Plate **Thicker Than** 6mm	

Miter Cut Plastic Panel or Aluminum Plate

Panel Part No.	Aluminum Part No.	Series	Service Type	Tolerance
7157	7181	F	Miter Cut Plastic Panel or Aluminum Plate **Up To** .250" Thick	+/- .010"
7201	7199	F	Miter Cut Plastic Panel or Aluminum Plate **Thicker Than** .250"	
65-7157	65-7181	M	Miter Cut Plastic Panel or Aluminum Plate **Up To** 6mm Thick	+/- .25mm
65-7201	65-7199	M	Miter Cut Plastic Panel or Aluminum Plate **Thicker Than** 6mm	

Miscellaneous Plastic Panel or Aluminum Plate

Panel Part No.	Aluminum Part No.	Series	Service Type	Tolerance
7166	7174	F	Miscellaneous Plastic Panel or Aluminum Plate Notch **ALL** Dimensions ≤ 3.000" **Up To** .250" Thick	+/- .010"
7185	7193	F	Miscellaneous Plastic Panel or Aluminum Plate Notch **ALL** Dimensions ≤ 3.000" **Thicker Than** .250"	
65-7166	65-7174	M	Miscellaneous Plastic Panel or Aluminum Plate Notch **ALL** Dimensions ≤ 75mm **Up To** 6mm Thick	+/- .25mm
65-7185	65-7193	M	Miscellaneous Plastic Panel or Aluminum Plate Notch **ALL** Dimensions ≤ 75mm **Thicker Than** 6mm	

Mill Finish Sanding Aluminum Plate

Aluminum Part No.	Series	Service Type	Tolerance
7513	F	Mill Finish Sanding Aluminum Plate **ALL** Dimensions ≤ 48"	—
7514	F	Mill Finish Sanding Aluminum Plate **ANY** Dimensions > 48"	
65-7513	M	Mill Finish Sanding Aluminum Plate **ALL** Dimensions ≤ 1220mm	—
65-7514	M	Mill Finish Sanding Aluminum Plate **ANY** Dimensions > 1220mm	

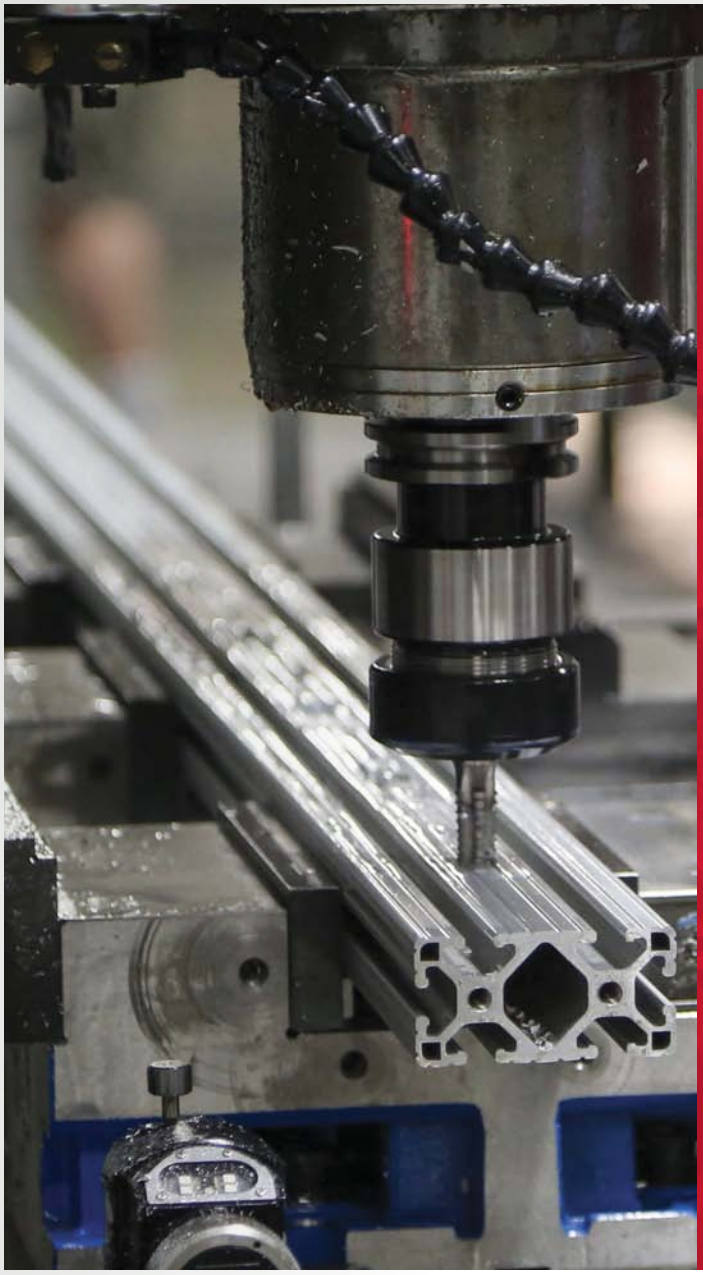

80/20 Custom Machining

We specialize in custom machining aluminum; there are no minimum charges and no minimum runs. Contact 80/20 today at 260.248.8030 or www.8020.net for assistance.

DID YOU KNOW?

Every year, 80/20 machines over 100,000 custom parts, panels and aluminum profiles.

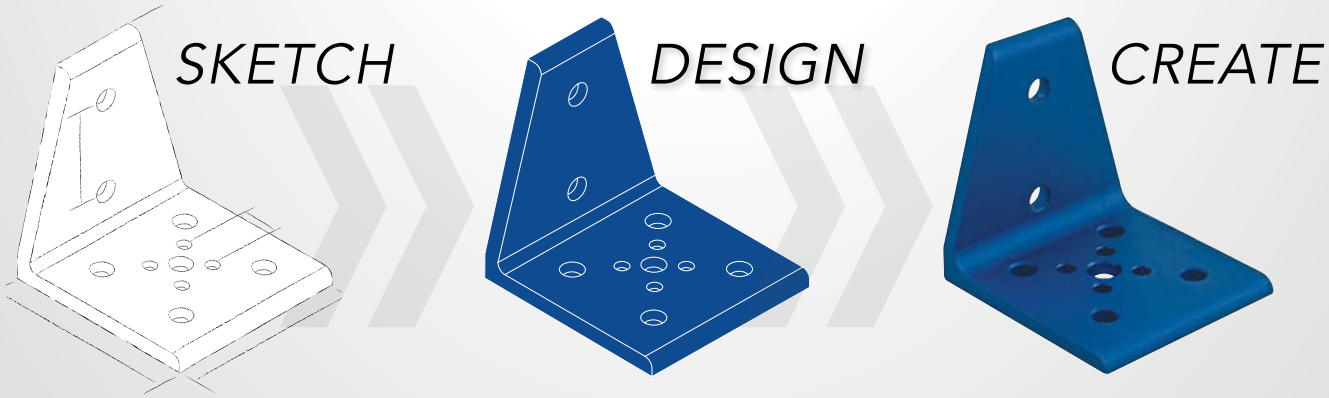

Ball Driver & "L" Wrench Set

Page 11-2

Cheater Pipe

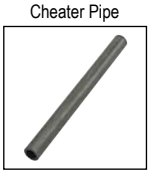

Page 11-2

Ball End "L" Hex Wrenches

Page 11-2

"T" Ball End Hex Wrench

Page 11-3

Ball End Hex Drivers

Page 11-3

Ball End Hex Socket

Page 11-4

Ball End Power Bits

Page 11-4

Six Lobe Tools

Page 11-5

Combination Wrenches

Page 11-6

Soft Face Mallet

Page 11-6

Roll Pin Punch

Page 11-7

Access Hole Drills

Page 11-7

Anchor Fastener Counterbore Cutters

Page 11-7

Access Hole Drill Jigs

Page 11-8

Attitude Lapel Pins

Page 11-8

Fastener / Hex Tool Size Reference

This chart is a quick reference when looking for the correct size of hex wrench to use with 80/20 fasteners (section 3).

Thread Size	Fastener Head			
	SHCS	BHSCS	FBHSCS	FHSCS
8-32	---	3/32"	---	---
10-32	5/32"	1/8"	---	---
1/4-20	3/16"	5/32"	5/32"	5/32"
5/16-18	1/4"	3/16"	3/16"	3/16"
3/8-16	5/16"	---	---	7/32"
M5	4mm	3mm	---	3mm
M6	5mm	4mm	---	4mm
M8	6mm	5mm	---	5mm
M10	8mm	6mm	---	6mm

Tools

Ball Driver and "L" Wrench Set

65-6106

6111

Cheater Pipe

Part No.	Series	Included Tool Head Sizes / Description	Weight
6111	F	.050", 1/16", 5/64", 3/32", 7/64", 1/8", 9/64", 5/32", 3/16", 7/32", 1/4", 5/16", 3/8"	.881 lb
65-6106	M	1.5mm, 2mm, 2.5mm, 3mm, 4mm, 5mm, 6mm, 8mm, 10mm	.3660 kg
6005	F M	Cheater Pipe - Fits over "L" hex wrenches up to 1/4" (M6) size	.103 lb

Ball End "L" Hex Wrenches

6100

6010

6040

65-6096

65-6097

65-6098

65-6099

Part No.	Series	Tool Head Size	Weight
6100	F	5/32"	.030 lb
6010		3/16"	.046 lb
6040		1/4"	.102 lb
65-6096	M	3mm	.0070 kg
65-6097		4mm	.0145 kg
65-6098		5mm	.0246 kg
65-6099		6mm	.0408 kg

80/20 BUILD YOUR IDEA
More on 80/20® products available at 8020.net

"T" Handle Ball End Hex Wrenches

Part No.	Series	Tool Head Size	Weight
6110	F	5/32"	.159 lb
6000		3/16"	.327 lb
6030		1/4"	.409 lb
65-6107	M	4mm	.0730 kg
65-6108		5mm	.1510 kg
65-6109		6mm	.1737 kg

Ball End Hex Drivers

Part No.	Series	Tool Head Size	Weight
6105	F	5/32"	.148 lb
6020		3/16"	.161 lb
6050		1/4"	.313 lb
65-6102	M	4mm	.0666 kg
65-6103		5mm	.0771 kg
65-6104		6mm	.1360 kg

Tools

Ball End Hex Sockets

Part No.	Series	Socket Size	Weight
6001	F	3/16"	.116 lb
6002		1/4"	.149 lb
6003	M	5mm	.0548 kg
6004		6mm	.0657 kg

* Use with a 3/8" drive ratcheting or pneumatic socket wrench.

Ball End Power Bits

Part No.	Series	Bit Size	Weight
6090	F	3/16"	.043 lb
6095		1/4"	.043 lb
65-6091	M	5mm	.0199 kg
65-6092		6mm	.0195 kg

80/20 BUILD YOUR IDEA
More on 80/20® products available at 8020.net

Six Lobe Tools

Part No.	Series	Bit Size	Weight
6072	F M	Six Lobe Power Bit - T-27	.033 lb
6073	F M	Six Lobe Power Bit - T-40	.041 lb
65-6068	M	Six Lobe Power Bit - T-50	.0181 kg
6064	F M	Six Lobe "L" Wrench - T-27	.042 lb
6066	F M	Six Lobe "L" Wrench - T-40	.088 lb
6067	F M	Six Lobe "L" Wrench - T-50	.181 lb
6074	F M	Six Lobe "T" Handle Wrench - T-27	.313 lb
6069	F M	Six Lobe "T" Handle Wrench - T-40	.352 lb
65-6071	M	Six Lobe "T" Handle Wrench - T-50	.3207 kg

Tools

Combination Wrenches

Part No.	Series	Tool Head Size	Hex Nut Size	Weight
6065	F	7/16"	1/4-20	.158 lb
6080	F RT	1/2"	5/16-18	.189 lb
65-6065	M	10mm	M6	.0716 kg
65-6080	M	13mm	M8	.0857 kg

Soft Face Mallet

Part No.	Series	Weight
6055	F M QF	.753 lb

80/20 BUILD YOUR IDEA
More on 80/20® products available at 8020.net

Roll Pin Punch

Part No.	Series	Weight
6117	RT	.293 lb

Access Hole Drills

Part No.	Series	Bit Size	Weight
6115	10	.201 x 2.30"	.023 lb
6070	15	.281 x 2.68"	.052 lb
25-6115	25	ø5.1mm	.0104 kg
40-6070	40	ø7.1mm	.0231 kg

Anchor Fastener Counterbore Cutters

Part No.	Series	Mill Diameter	Weight
6160	10	9/16"	.180 lb
6060	15	13/16"	.335 lb
25-6160	25	14.3mm	.0816 kg
40-6060	40	20.0mm	.1859 kg

* Two flute center cutting

Tools

Access Hole Drill Jigs

40-6135

40-6130

40-6075

6120

6131

6136

40-6076

25-6121

6121

6076

Fractional Part No.	Series	Description	Metric Part No.	Series	Description	Hole Size	Weight
6120*	10	Jig for 1010 Profile	25-6120*	25	Jig for 25-2525 Profile	.201" (5.1mm)	.142 lb
6131*		Jig for 1020 Profile	25-6131*		Jig for 25-2550 Profile	.201" (5.1mm)	.146 lb
6136*		Jig for 2020 Profile	25-6136*		Jig for 25-5050 Profile	.201" (5.1mm)	.290 lb
6121		Bushing for 10 Series	25-6121		Bushing for 25 Series	.201" (5.1mm)	.015 lb
6075*	15	Jig for 1515 Profile	40-6075*	40	Jig for 40-4040 Profile	.281" (7.1mm)	.342 lb
6130*		Jig for 1530 Profile	40-6130*		Jig for 40-4080 Profile	.281" (7.1mm)	.392 lb
6135*		Jig for 3030 Profile	40-6135*		Jig for 40-8080 Profile	.281" (7.1mm)	.852 lb
6076		Bushing for 15 Series	40-6076		Bushing for 40 Series	.281" (7.1mm)	.033 lb

*Does NOT come with drill bit.

Attitude Lapel Pins

8020

8030

Part No.	Description	Weight
8020	Deluxe Attitude Lapel Pin	.004 lb
8030	Economy Attitude Lapel Pin	.005 lb

80/20® BUILD YOUR IDEA
More on 80/20® products available at 8020.net

Registered Trademarks Used Throughout the 80/20® Catalog

3D ContentCentral® ..... is a registered trademark of Dassault Systèmes
3M™ ..... is a registered trademark of 3M Company
AutoCAD® ..... is a registered trademark of Autodesk Inc.
Grabber™ ..... is a registered trademark of Southco, Inc.
Inventor® ..... is a registered trademark of Autodesk Inc.
LNP™ Stat-Kon™ ..... is a registered trademark of SABIC
Loctite® ..... is a registered trademark of Henkel AG & Company
PARTsolutions® ..... is a registered trademark of PARTsolutions, LLC
Solidworks® ..... is a registered trademark of SolidWorks Corporation
Velcro® ..... is a registered trademark of Velcro Industries B.V.
VHB™ ..... is a registered trademark of 3M Company

Metric / U.S. Customary Unit Equivalents

Linear				
inches	x 25.40	= millimeter (mm)	x 0.03937	= inches
feet	x 0.3048	= meters (m)	x 3.281	= feet
yards	x 0.9144	= meters (m)	x 1.0936	= yards
miles	x 1.6093	= kilometers (km)	x 0.6214	= miles
inches	x 2.540	= centimeters (cm)	x 0.3937	= inches
microinches	x 0.0254	= micrometers (um)	x 39.37	= microinches
Area				
$inches^2$	x 645.16	= $millimeters^2$ (mm^2)	x 0.00155	= $inches^2$
$inches^2$	x 6.452	= $centimeters^2$ (cm^2)	x 0.155	= $inches^2$
$feet^2$	x 0.0929	= $meters^2$ (m^2)	x 10.764	= $feet^2$
$yards^2$	x 0.8361	= $meters^2$ (m^2)	x 1.196	= $yards^2$
acres	x 0.4047	= hectares (10^4 m^2) or (ha)	x 2.471	= acres
$miles^2$	x 2.590	= $kilometers^2$ (km^2)	x 0.3861	= $miles^2$
Mass				
ounces (av)	x 28.35	= grams (g)	x 0.03527	= ounces (av)
pounds (av)	x 0.4536	= kilograms (kg)	x 2.2046	= pounds (av)
tons (2000 lb)	x 907.18	= kilograms (kg)	x 0.001102	= tons (2000 lb)
tons (2000 lb)	x 0.90718	= metric tons (t)	x 1.1023	= tons (2000 lb)
pounds/foot	x .671969	= kilograms/meter	x 1.4888	= pounds/foot
Force				
ounces - f	x 0.278	= newtons (N)	x 3.597	= ounces - f
pounds - f	x 4.448	= newtons (N)	x 0.2248	= pounds - f
kilograms - f	x 9.807	= newtons (N)	x 0.10197	= kilograms - f

Index

Glossary

0 Degree Dynamic Pivot Nub	A connecting block that allows profiles to swing 180 degrees parallel to the mounting profile.
10 Series	80/20's family of T-slot profiles utilizing 1.0 inch and 0.5 inch centerlines.
15 Series	80/20's family of T-slot profiles utilizing 1.5 inch and 0.75 inch centerlines.
20 Series	80/20's family of T-slot profiles utilizing 20mm and 10mm centerlines.
25 Series	80/20's family of T-slot profiles utilizing 25mm and 12.5mm centerlines.
30 Series	80/20's family of T-slot profiles utilizing 30mm and 15mm centerlines.
40 Series	80/20's family of T-slot profiles utilizing 40mm and 20mm centerlines.
45 Series	80/20's family of T-slot profiles utilizing 45mm and 22.5mm centerlines.
45 Degree Support	Precut and assembled profiles with 45° miters that add strength to corner connections.
6005A-T61	An aluminum alloy used in many 80/20 profiles. It offers high strength, excellent machinability, and a great aesthetic finish.
80/20 Builds	The project assembly division of 80/20® LLC. There are three service levels; preloading, subassembly and full assembly.
90 Degree Flat Plate	A connecting plate used to make right angle connections of T-slot profiles.
90 Degree Dynamic Pivot Nub	A connecting block that allows profiles to swing 180 degrees perpendicular to the mounting profile.
ABS Haircell	Acrylonitrile Butadiene Styrene: decorative plastic sheet material.
Access Hole	A hole specifically located in the T-slots that allow access to tighten an end fastener.
Adjustable Hinge	A hinge with adjustable tension between the leaves.
Aesthetic	Tasteful, pleasing, or inventive.
Align-a-Groove	Shallow grooves running the length of some of 80/20®'s T-slotted profiles that aid in aligning profiles during assembly.
Aluminum Composite	Two thin aluminum sheets bonded together with a corrugated polyallomer core.
Aluminum Extrusion	Aluminum bar produced by heating and pressing the aluminum material through a shaped opening in a die, forming a distinctive profile.
Anchor Fastener	A strong and adjustable fastener used to join two T-slotted profiles at right angles.
Anodize	A thin, protective electrochemical coating used on aluminum surfaces; can be clear or colored.
ASTM	The American Society for Testing Materials: organization that sets testing standards and methods for materials.
Attitude	Our positive, can-do disposition that sets 80/20® apart from the rest of the competition.
AutoQuoterX® II	80/20's free 64-bit accessible plugin used in conjunction with full versions of AutoCAD®.
BHSCS	Button Head Socket Cap Screw.
Black Chromate	A black, corrosion-resistant coating used on some ferrous screw products.
Black Zinc	A black, corrosion-resistant coating used on some metal products.
Bolt Assembly	A single part number that makes ordering combinations of fasteners easier and faster.
Bushing	A removable cylindrical lining for an opening used to limit the size of the opening, resist abrasion, or serve as a guide.
Butt Fastener	Connects profiles end-to-end for a strong, flush connection.
CAD	Computer Aided Design or Computer Aided Drafting.
Chamfer	To bevel off the right angled edge of a corner.
Cheater Pipe	An improvised breaker bar made from a length of pipe and a wrench, used to provide extra torque.
Clear Chromate	A clear, corrosion-resistant coating used on some ferrous metal products.
Coefficient of Friction	The amount of force between two materials rubbing against each other.
Counterbore	A cylindrical, flat-bottomed hole drilled partially through a profile.
Countersink	To chamfer a screw hole to allow the screw head to remain level with the mounting surface.
Cross Clamp	A stanchion block used to connect two tubes at right angles.
Cross Flat Plate	A pre-drilled plate used to connect profiles that intersect at right angles.
Deburr	To remove a sharp edge from a machined surface.
Double Flange	A part with two opposing projections, commonly used for attachment to other surfaces.
Double T-Nut	A T-nut containing two threaded holes with centerlines that match those of flat plates, used to speed up assembly.
Drill Jig	A fixture used for drilling perpendicular access holes.

Glossary

Drop Lock	An 80/20 T-slot profile design feature that consists of a 2° decline in the T-slot flange. When a fastener is tightened to or beyond the necessary torque, the flange will press up to the adjoining profile, creating pressure that tightly holds the two bars together.
Dynamic Pivot Nub	An anchoring block fastened to the T-slot allowing mounted profiles full 180-degree motion, perpendicular to or parallel with the T-slot.
End Cap	A black plastic cover for the profile end.
End Fastener	A connecting clip and screw that provides a clean, hidden 90° connection for T-slot profiles.
Ergonomics	An applied science concerned with arranging things people interact with efficiently and safely.
FBHSCS	Flanged Button Head Socket Cap Screw.
FDA	The United States Food and Drug Administration.
FHSCS	Flat Head Socket Cap Screw.
Flange	A rib or rim for strength, for guiding, or for attaching to another object.
Flange Mount Caster	A caster with a pre-drilled flange to mount to a base plate.
Flat Plate	A pre-drilled joining plate or corner bracket used to connect profiles.
Floor Mount Base Plate	A pre-drilled bracket assembly used to anchor an application to the floor.
Friction Hinge	A hinge that holds doors open at variable angles to provide hands-free access for vertical-lifting smaller doors.
Gusset	A supported 45-degree angled bracket used to connect profiles at right angles.
HDPE	High Density Polyethylene.
High Pressure Laminate	A high strength, durable material used for workstations, countertops, and other work surfaces.
Inside Corner Bracket	A pre-drilled angled fastener used to connect profiles at right angles.
Jam Nut	A hex nut used to fix the height position of a threaded leveling foot or caster in the end of a profile.
“L” Structural Pivot Arm	A pre-drilled angled fastener used to connect profiles to pivot nubs.
Leveling/Anchoring Base Plate	A pre-drilled and tapped plate used to mount both leveling feet and floor anchor bolts to a profile frame.
LHSCS	Low Head Socket Cap Screw.
Lift-Off Hinge	An aluminum hinge designed to allow door panels to be removed easily by lifting the door while open. It also utilizes two pin lengths to facilitate fast, easy door replacement.
Linear Bearing	A slide that allows in-line motion using the T-slotted frame as a rail, and UHMW-PE bearing pads as guides. Patented by 80/20®.
Linear Bearing Brake Hole	A precisely located hole that allows for attachment of brake hardware to the bearing housing.
Linear Bearing Brake Kit	The hardware kit consisting of a handle, washer, and T-slot stud used to fix the position of a linear bearing.
Locking Grabber™ Handle	A cabinet latch used for panel doors that locks with a key.
Mesh Retainer	An anchoring bracket that attaches wire cloth or expanded metal panels to a T-slot frame.
Miter Cut	An angled cut.
Mounting Block	Used to attach a hollow or solid round tube profile to a T-slot frame.
MW	Molecular Weight: used in measuring plastic density.
Neoprene	A black, hard rubber product.
Nylatron GS	An extruded plastic used in the manufacturing of 80/20 roller wheels.
Nylon	Any of several polymeric, thermoplastic amides formed into strong elastic thread by forcing a melt through fine jets.
Open Style Access Hole	Customer-specified locations for access holes used to tighten end fasteners.
OSHA	Occupational Safety and Health Administration.
Panel Mount Block	An adjustable mounting block, keyed to the T-slot, used to mount panels to a profile frame.
Panel Retainer	An anchoring bracket that attaches plastic or sheet panels to a T-slot frame.
Pawl	A rotating catch used to capture and hold a door shut.
Phenolic Resin	A decorative, durable surface with exceptional impact and scratch resistance.
Pivot	To turn or oscillate on. To rotate about a stationary point.
Pivot Bracket	A flat plate that allows a profile to pivot 90º or 180º relative to the mounting profile and lock in place.
Polycarbonate	An impact-resistant thermoplastic resin that is hard, tough, and moisture resistant. Trade names Lexan® or Makrolon® polycarbonate
Polyurethane	A tough flexible plastic with high load bearing properties used on some 80/20 casters.

Index

Glossary

Position Floor Lock	A braking device that prevents a frame on wheels from rolling.
Powder Coat	An electrostatically applied paint that provides superior protection.
Preload	To load fasteners onto a flat plate or bracket to speed up assembly.
Pressure Manifold Plate	A pre-drilled plate used with a gasket to form a pressurized air or fluid chamber inside the cavity of a T-slotted profile.
PVC	Polyvinyl Chloride: used in lightweight plastic sheet and snap-on panel gaskets.
Quick Frame®	80/20's economical, lightweight framing alternative, utilizing one-inch square aluminum tubing and nylon push-in corner connectors.
Ready Tube®	Aluminum framing system featuring prefabricated mounting holes.
RGA	Returned Goods Authorization: A number assigned by 80/20's customer service department to allow faster processing of a return shipment.
Dynamic Right Angle Pivot Nub	A connecting block that allows mounted profiles to swing 90 degrees parallel to or perpendicular to the attached T-slot.
Rigid Caster	A wheel that is intended for straight back and forth motion. It can be combined with a swivel caster to provide directional change.
Roller Wheel	A wheel, keyed to fit the 80/20 profile T-slot, allowing 80/20 profiles to be used as rails.
Rust	Oxidation commonly associated with steel products.
SS	Stainless Steel.
SHCS	Socket Head Cap Screw.
Single Flange	A material with one projection, commonly used for attachment to other surfaces.
Slotted Corner Bracket	A fastener used for connecting profiles at right angles. The slotted holes allow for easy adjustments.
Stanchion	A block used for mounting round tubes to a T-slotted frame, adding a fourth or fifth axis of mobility.
Swivel Caster	A wheel that enables pivot turns and instant response to directional change.
Tap	To add threads to an extruded hole in a T-slot profile.
"T" Flat Plate	A pre-drilled plate used to connect profiles that intersect at right angles.
Threaded Stem Swivel Caster	A steerable wheel mounted to a frame by means of a threaded rod.
T-Nut	A special threaded flat screw nut designed to fit into the T-slot of 80/20® profiles.
Transition Bracket	A pre-drilled angled bracket designed to connect different series of profiles.
Transition Plate	A pre-drilled plate designed to connect different series of profiles.
Triple T-Nut	A T-nut with three threaded holes with centerlines that match those of flat plates, used to speed up assembly.
T-Slot Cover	A cover that fits in a T-slot channel to prevent dust and debris build up, cover wires and tubes, and add a polished look.
T-Slot Designation Chart	A diagram to assist in locating machining service points for 80/20® T-slotted profiles.
T-Slot Stud	A threaded bolt designed so that the bolt head fits into the T-slot of a profile, leaving the threaded end protruding.
T-Slot	An opening extruded into, or machined out of, a solid surface in the shape of a "T," designed to capture or hold in place fasteners that can be located anywhere along the surface of the material.
TYP.	Typical.
USDA	United States Department of Agriculture.
UHMW	Ultra High Molecular Weight
UHMW-PE	Ultra High Molecular Weight Polyethylene: excellent abrasion-resistant material used for bearing pads.
Universal Dynamic Pivot Assembly	A connecting block assembly that allows mounted profiles to swing 180 degrees parallel to or perpendicular to the attached T-slot.
Universal Dynamic Pivot Nub	A connecting block that allows mounted profiles to swing 180 degrees parallel to or perpendicular to the attached T-slot.
Wire Duct	A one piece, flexible molded nylon duct for containing wires and tubes. Open slots allow for lead offs; pieces snap together end to end for continuous travel.
Zinc Plating	A bright silver or black corrosion-resistant coating used on some metal products.

Part Number Index

1001....2-17
1001-S....2-17
1002....2-18
1002-S....2-18
1003....2-19
1003-S....2-19
1004....2-20
1004-S....2-20
1010....2-16
1010-S....2-16
1012....2-21
1012-S....2-21
1020....2-25
1020-S....2-24
1030....2-27
1030-S....2-26
1050....2-22
1501....2-35
1501-LS....2-35
1502....2-36
1502-LS....2-36
1503....2-37
1503-LS....2-37
1504....2-38
1504-LS....2-38
1515....2-34
1515-Lite....2-33
1515-LS....2-33
1515-S....2-34
1515-UL....2-32
1515-ULS....2-32
1517....2-40
1517-LS....2-39
1530....2-49
1530-Lite....2-47
1530-LS....2-46
1530-S....2-48
1530-UL....2-45
1530-ULS....2-44
1534-Lite....2-41
1545....2-52
1545-LS....2-50
1545-S....2-51
1547....2-39
1575....2-41
2012....2-23
2015....8-11
2020....2-29
2020-S....2-28
2021....4-142
2022....8-12
2025....8-11
2026....8-11
2028....8-11
2030....8-11
2035....8-12
2036....8-13
2037....8-13
2040....2-31
2040-S....2-30
2045....8-11
2046....8-11
2050....8-11
2051....4-63
2052....4-118
2053....4-124
2054....4-30
2055....4-117
2056....4-114
2057....4-135
2058....4-114
2059....4-63
2060....4-108
2061....4-108
2062....4-108
2063....4-117
2064....4-76
2065....4-77
2066....4-78
2067....4-62
2068....4-62
2069....4-126
2070....4-113
2071....4-92
2073....4-70
2074....4-72
2075....4-71
2076....4-73
2077....4-74
2078....4-75
2079....4-109
2080....4-91
2081....4-91
2082....4-119
2083....4-119
2084....4-95
2085....4-95
2086....4-95
2087....4-120
2088....4-126
2089....4-120
2090....4-129
2091....4-92
2093....4-70
2094....4-72
2095....4-71
2096....4-73
2097....4-74
2098....4-75
2099....8-40
2100....8-40
2101....4-76
2102....4-77
2103....4-78
2104....4-76
2105....4-77
2106....4-78
2107....4-125
2108....8-40
2109....8-18
2110....8-18
2111....8-18
2112....8-18
2113....8-18
2114....8-18
2115....4-138
2116....4-138
2117....4-138
2118....4-138
2119....8-17
2120....4-137
2121....4-127
2122....4-127
2123....4-128
2124....5-40
2125....4-126
2126....4-123
2127....5-42
2128....5-40
2129....5-40
2130....5-40
2131....5-42
2132....5-42
2133....8-52
2134....4-134
2135....5-40
2136....5-44
2137....5-40
2138....5-40
2139....5-42
2140....5-42
2141....5-44
2142....5-44
2143....5-44
2144....8-54
2145....5-42
2146....5-44
2147....5-37
2148....5-39
2150....8-48
2151....8-48
2152....8-48
2153....8-48
2154....8-50
2155....8-50
2156....8-56
2157....8-56
2159....8-50
2160....8-50
2161....8-53
2162....8-52
2163....8-55
2164....8-54
2165....5-45
2166....5-45
2167....5-46
2168....5-46
2169....5-47
2170....5-46
2171....5-47
2172....8-52
2173....8-54
2175....5-46
2177....4-138

Visit product pages for additional size, anodize and color options.

Index

Part Number Index

2178....4-138
2180....5-47
2181....5-20
2182....5-20
2183....5-20
2184....5-20
2186....5-19
2187....5-19
2188....5-19
2189....5-19
2190....5-23
2191....5-24
2192....5-23
2193....5-24
2194....5-23
2195....5-24
2200....5-23
2201....5-24
2202....5-23
2203....5-18
2204....5-18
2205....5-21
2207....5-22
2208....5-22
2209....5-22
2210....4-65
2211....4-65
2215....5-21
2216....5-21
2217....5-21
2220....4-65
2221....4-65
2230-BLU....8-32
2240-BLU....8-32
2250-BLU....8-32
2264....8-32
2265....8-32
2270-BLU....8-32
2280....4-67
2281....4-67
2282....4-67
2286....8-44
2287....8-44
2288....8-33
2289....8-34
2290....4-67
2291....5-5
2292....5-5
2293....5-5
2294....5-5
2295....5-5
2296....5-5
2298....5-4
2299....5-4
2300....5-4
2305....5-4
2306....5-4
2307....5-4
2310....5-4
2311....5-8
2312....5-8
2314....5-8
2316....5-8
2317....5-6
2318....5-6
2321....5-7
2323....5-7
2324....4-84
2325....4-84
2326....4-84
2327....4-84
2328....4-84
2333....5-10
2334....5-10
2335....5-11
2336....5-11
2337....5-9
2338....5-9
2340....8-49
2341....8-49
2349....8-51
2350....8-51
2361....5-40
2362....5-42
2363....5-44
2364....5-44
2365....5-40
2366....5-42
2367....5-44
2370....8-35
2371....8-36
2372....8-38
2380....5-48
2385....5-48
2387....5-48
2390....5-48
2400....5-48
2404....5-50
2405....5-50
2406....5-38
2407....5-38
2408....5-38
2409....5-38
2410....5-48
2413....5-52
2414....5-50
2415....5-50
2416....5-50
2417....5-50
2418....5-36
2419....5-36
2420....5-36
2421....4-35
2422....4-35
2423....4-35
2424....4-136
2425....4-28
2426....5-36
2427....4-28
2428....4-37
2429....4-136
2430....4-37
2431....4-48
2432....4-46
2433....4-42
2434....4-40
2435....4-55
2436....4-54
2437....4-53
2438....4-52
2439....8-56
2440....8-56
2441....8-56
2442....4-59
2446....8-53
2447....8-52
2448....8-55
2449....8-54
2450....8-57
2451....8-57
2452....4-22
2453....4-22
2454....4-22
2455....4-22
2456....4-22
2457....4-22
2460....4-26
2461....4-26
2462....4-26
2463....4-26
2464....4-26
2465....4-140
2467....4-26
2468....4-26
2470....4-26
2471....4-26
2472....4-27
2473....4-27
2474....4-27
2475....4-27
2476....4-27
2477....4-27
2478....4-27
2479....4-26
2480....4-25
2481....4-25
2482....4-25
2483....4-23
2484....4-23
2485....4-23
2488....4-36
2489....4-36
2490....4-46
2491....4-54
2492....4-52
2493....4-48
2494....4-55
2495....4-53
2496....4-40
2497....4-42
2500....8-28
2501....8-28
2502....8-28
2503....8-28

Visit product pages for additional size, anodize and color options.

80/20 BUILD YOUR IDEA
More on 80/20® products available at 8020.net

Part Number Index

2504....8-28
2505....8-28
2506....8-29
2507....8-29
2508....8-29
2509....8-29
2510....8-29
2511....8-29
2512....4-44
2515....4-44
2517....4-50
2518....4-56
2519....4-51
2520....4-57
2521....4-50
2522....4-56
2523....4-51
2524....4-57
2525....8-6
2526....8-7
2527....8-6
2528....8-6
2529....8-6
2530....8-7
2531....8-7
2532....8-6
2533....8-6
2534....8-6
2535....8-6
2536....8-7
2537....8-6
2538....8-6
2539....8-6
2540....8-7
2541....8-7
2542....8-6
2543....8-6
2544....8-6
2545....8-6
2546....8-6
2547....8-6
2548....8-6
2549....8-6
2550....8-7
2551....8-7
2552....8-7
2553....8-7
2554....8-7
2555....8-6
2556....8-5
2557....8-5
2558....8-5
2559....8-5
2560....8-7
2561....8-6
2562....8-6
2563....8-6
2564....8-6
2565....8-5
2566....8-5
2567....8-5
2568....8-5
2569....8-7
2570....8-5
2571....8-5
2572....8-5
2573....8-5
2574....8-5
2575....8-5
2576....8-7
2577....8-7
2578....8-7
2579....8-7
2580....8-7
2581....8-7
2582....8-7
2583....8-5
2584....8-5
2601....4-10
2602....4-10
2603....4-10
2604....4-10
2605....4-10
2606....4-10
2607....4-10
2608....4-10
2609....4-12
2610....4-12
2611....4-12
2612....4-12
2613-S....4-13
2613-T....4-13
2614-S....4-13
2614-T....4-13
2615....4-15
2616....4-15
2617....4-15
2618....4-15
2619....4-15
2620....4-15
2621....4-15
2622....4-15
2623....4-15
2624....4-15
2629....4-12
2630....4-12
2631....4-15
2632....4-15
2633....4-17
2634....4-17
2635....4-17
2636....4-17
2637....4-17
2640....4-18
2641....4-11
2642....4-11
2643....4-12
2644....4-12
2645....4-12
2646....4-11
2647....4-11
2648....4-11
2649....4-11
2650....4-16
2651....4-19
2652....4-19
2653....4-19
2654....4-19
2655....4-19
2656....4-19
2657....4-19
2658....4-19
2659....4-20
2660-S....4-14
2660-T....4-14
2661-S....4-14
2661-T....4-14
2662-S....4-14
2662-T....4-14
2663-S....4-14
2663-T....4-14
2664....4-20
2666....4-19
2667....4-19
2668....4-19
2669....4-19
2677....8-30
2678....8-30
2700....5-12
2701....5-13
2702....5-15
2703....5-14
2704....5-12
2705....5-13
2708....5-12
2709....5-13
2712....5-12
2713....5-13
2714....5-16
2715....5-16
2716....5-16
2717....5-16
2730....4-116
2731....5-17
2745....4-130
2750....4-68
2751....4-69
2752....4-68
2753....4-69
2754....4-68
2755....4-69
2756....4-69
2757....4-68
2758....4-69
2759....4-69
2760....4-121
2761....4-121
2763....4-121
2765....4-121
2780....4-115
2781....4-115
2782....4-115
2796....6-90
2797....6-90

Visit product pages for additional size, anodize and color options.

Index

Part Number Index

2798....6-90
2799....6-90
2800....4-24
2802....4-24
2804....4-24
2806....4-24
2808....4-21
2810....4-58
2811....4-58
2812....4-19
2813....4-19
2814....4-21
2815....4-21
2816....8-19
2817....8-19
2818....8-19
2819....8-19
2820....8-19
2821....8-19
2822....8-19
2823....8-19
2824....8-19
2825....8-19
2826....8-19
2827....8-19
2828....8-22
2829....4-139
2830....4-81
2831....4-82
2832....4-81
2833....4-82
2834....4-139
2835....4-83
2836....4-83
2837....4-79
2838....4-80
2839....4-79
2840....4-80
2841....4-83
2842....4-83
2843....8-45
2844....8-45
2845....8-45
2846....8-45
2849....8-46
2850....8-46
2851....8-45
2852....8-45
2871....8-19
2876....8-21
2877....8-21
2880....4-108
2881....4-108
2882....4-108
2884....4-111
2885....4-111
2886....4-111
2887....4-111
2888....4-112
2889....4-112
2890....8-25
2891....8-25
2892....8-25
2893....8-25
2894....8-25
2895....8-25
2899....8-24
2900....4-28
2901....5-30
2902....5-30
2903....5-30
2904....5-30
2905....5-30
2906....5-30
2907....5-30
2908....5-30
2910....4-28
2922....4-119
2923....4-119
2927....4-120
2929....4-120
2932....4-119
2933....4-119
2937....4-120
2939....4-120
2952....4-119
2953....4-119
2957....4-120
2959....4-120
3000....3-197
3002....3-194
3004....3-194
3005....3-177
3006....3-188
3007....3-189
3010....3-157
3011....3-180
3012....3-180
3017....3-184
3018....3-184
3022....3-180
3024....3-177
3030....2-56
3030-Lite....2-54
3030-LS....2-53
3030-S....2-55
3032....3-177
3034-Lite....2-43
3035....3-201
3042....3-177
3044....3-181
3048....3-181
3050....3-177
3051....3-177
3052....3-181
3053....3-189
3054....3-177
3055....3-188
3056....3-181
3057....3-181
3058....3-181
3059....3-177
3060....2-57
3061....3-177
3062....3-181
3063....3-177
3064....3-181
3065....3-177
3066....3-179
3067....3-181
3068....3-181
3071....3-181
3072....3-181
3075....2-42
3080....3-181
3081....3-181
3082....3-181
3085....3-175
3086....3-175
3087....3-175
3088....3-175
3090....3-14
3091....3-14
3092....3-14
3093....3-14
3094....3-14
3095....3-14
3096....3-14
3097....3-14
3098....3-14
3099....3-14
3100....3-14
3102....3-14
3104....3-177
3106....3-181
3110....3-181
3111....3-177
3112....3-181
3114....3-177
3115....3-191
3116....3-191
3117....3-177
3118....3-177
3119....3-181
3120....3-191
3122....3-181
3123....3-182
3124....3-182
3125....3-182
3126....3-191
3127....3-182
3128....3-182
3129....3-182
3130....3-182
3131....3-182
3132....3-182
3133....3-182
3134....3-191
3140....3-182
3150....3-197
3151....3-197
3152....3-197
3153....3-197
3154....3-197

Visit product pages for additional size, anodize and color options.

80/20 BUILD YOUR IDEA
More on 80/20® products available at 8020.net

Part Number Index

3183....3-17
3189....3-17
3201....3-158
3202....3-158
3203....3-158
3204....3-158
3205....3-158
3206....3-158
3208....3-189
3214....3-189
3215....3-189
3258....3-188
3260....3-188
3261....3-188
3262....3-188
3263....3-156
3266....8-12
3267....8-12
3272....8-11
3273....4-123
3274....8-11
3275....3-154
3276....3-154
3278....3-155
3279....3-156
3280....3-156
3281....3-156
3282....3-164
3283....3-164
3284....3-164
3285....3-157
3286....3-154
3287....3-157
3288....3-191
3289....3-198
3290....3-191
3293....3-193
3295....3-193
3297....3-193
3299....3-193
3300....3-196
3301....3-196
3302....3-196
3303....3-196
3304....3-195
3305....3-195
3306....3-195
3307....3-195
3308....3-195
3309....3-165
3310....3-165
3311....3-165
3312....3-165
3313....3-165
3315....3-195
3318....3-197
3319....3-197
3320....3-197
3321....3-194
3322....3-194
3323....3-197
3325....3-197
3330....3-179
3340....3-179
3342....3-179
3343....3-18
3344....3-18
3346....3-176
3348....3-176
3351....3-18
3352....3-18
3354....3-13
3355....3-197
3356....3-194
3357....3-197
3358....3-194
3359....3-12
3360....3-12
3361....3-13
3362....3-12
3363....3-12
3364....3-21
3365....3-196
3366....3-196
3367....3-194
3368....3-21
3369....3-15
3370....3-15
3371....3-194
3372....3-194
3373....3-12
3375....3-164
3376....3-164
3378....3-16
3379....3-16
3380....3-16
3381....3-16
3382....3-154
3383....3-17
3384....3-194
3385....3-194
3386....3-194
3387....3-194
3388....3-194
3389....3-17
3390....3-179
3391....3-13
3392....3-12
3393....3-194
3394....3-194
3395....3-12
3396....3-13
3397....3-195
3398....3-194
3399....3-194
3400....3-180
3405....3-180
3406....3-180
3407....3-195
3408....3-194
3409....3-195
3410....3-180
3411....3-180
3412....3-196
3413....3-196
3414....3-195
3415....3-195
3416....3-194
3417....3-195
3418....3-194
3419....3-195
3420....3-180
3421....3-198
3422....3-198
3423....3-198
3424....3-198
3426....3-198
3427....3-198
3428....3-198
3429....3-198
3430....3-198
3431....3-198
3432....3-195
3433....3-195
3434....3-195
3435....3-196
3437....3-196
3439....3-196
3441....3-196
3442....3-196
3443....3-196
3445....3-196
3446....3-198
3450....3-197
3452....3-197
3454....3-197
3455....3-198
3456....3-197
3457....3-198
3458....3-198
3459....3-198
3460....3-198
3461....3-196
3462....3-197
3463....3-197
3464....3-197
3465....3-194
3466....3-198
3467....3-196
3468....3-197
3469....3-194
3470....3-198
3471....3-195
3472....3-198
3473....3-198
3474....3-197
3476....3-196
3478....3-196
3479....3-194
3480....3-194
3481....3-194
3482....3-194
3483....3-198
3484....3-194

Visit product pages for additional size, anodize and color options.

Index

Part Number Index

3485....3-194
3486....3-195
3487....3-198
3488....3-198
3489....3-198
3490....3-195
3491....3-195
3492....3-195
3493....3-195
3494....3-195
3495....3-195
3496....3-195
3497....3-195
3498....3-195
3499....3-196
3500....3-187
3501....3-187
3520....3-194
3521....3-194
3522....3-194
3523....3-194
3524....3-195
3525....3-195
3526....3-196
3527....3-196
3528....3-196
3529....3-196
3530....3-196
3531....3-196
3532....3-195
3533....3-195
3534....3-195
3600....3-164
3601....3-179
3602....3-164
3603....3-179
3604....3-179
3605....3-165
3606....3-179
3607....3-179
3608....3-165
3609....3-177
3610....3-181
3611....3-177
3612....3-181
3613....3-198
3614....3-177
3615....3-181
3617....3-177
3618....3-196
3619....3-181
3620....3-196
3621....3-177
3622....3-181
3624....3-164
3625....3-186
3626....3-186
3627....3-182
3628....3-186
3630....3-196
3632....3-196
3634....3-197
3636....3-197
3638....3-198
3639....3-195
3640....3-198
3642....3-198
3645....3-180
3647....3-194
3649....3-180
3650....3-180
3656....3-189
3657....3-189
3658....3-188
3659....3-188
3660....3-12
3661....3-12
3662....3-12
3663....3-177
3665....3-12
3666....3-166
3667....3-166
3668....3-166
3669....3-166
3670....3-166
3671....3-181
3675....3-154
3676....3-155
3677....3-180
3678....3-155
3679....3-16
3680....3-16
3681....3-16
3682....3-16
3685....3-181
3686....3-154
3687....3-181
3688....3-177
3689....3-181
3690....3-177
3691....3-181
3692....3-177
3693....3-181
3694....3-177
3695....3-181
3696....3-177
3697....3-181
3698....3-177
3699....3-197
3703....3-158
3705....3-158
3709....3-189
3714....3-189
3716....3-191
3720....3-191
3737....3-197
3745....3-197
3747....3-185
3748....3-185
3749....3-185
3750....3-185
3751....3-185
3752....3-185
3753....3-185
3754....3-185
3755....3-185
3758....3-190
3759....3-190
3760....3-188
3762....3-188
3764....3-188
3766....8-12
3767....8-12
3778....3-155
3781....3-165
3782....3-164
3783....3-164
3784....3-164
3785....3-154
3786....3-154
3787....3-165
3788....3-165
3789....3-154
3790....3-164
3791....3-164
3792....3-18
3793....3-18
3794....3-18
3795....3-18
3800....3-156
3801....3-182
3802....3-178
3803....3-182
3804....3-178
3805....3-157
3806....3-183
3807....3-183
3808....3-178
3809....3-178
3810....3-183
3811....3-178
3812....3-183
3813....3-178
3814....3-183
3815....3-178
3816....3-203
3817....3-203
3818....3-183
3819....3-179
3820....3-189
3821....3-189
3822....3-183
3824....3-199
3825....3-202
3826....3-199
3827....3-199
3829....3-199
3830....3-201
3831....3-200
3832....3-201
3833....3-200
3834....3-203
3835....3-200
3836....3-154

Visit product pages for additional size, anodize and color options.

80/20 BUILD YOUR IDEA
More on 80/20® products available at 8020.net

Part Number Index

3838....3-155
3839....3-183
3840....3-203
3841....3-201
3842....3-164
3843....3-164
3844....3-164
3845....3-201
3847....3-201
3849....3-200
3850....3-199
3851....3-191
3852....3-191
3853....3-191
3854....3-191
3855....3-201
3856....3-200
3857....3-191
3859....3-154
3860....3-188
3861....3-188
3862....3-201
3863....3-201
3864....3-203
3865....3-203
3866....3-158
3867....3-199
3868....3-158
3869....3-203
3870....3-202
3871....3-158
3872....3-201
3873....3-158
3874....3-203
3875....3-164
3876....3-164
3877....3-202
3878....3-203
3879....3-156
3880....3-202
3881....3-202
3882....3-202
3883....3-202
3884....3-202
3886....3-202
3887....3-203
3888....3-203
3889....3-202
3890....3-202
3891....3-16
3892....3-165
3894....3-165
3895....3-16
3896....3-12
3897....3-12
3898....3-165
3899....3-203
3900....3-157
3901....3-18
3902....3-18
3903....3-175
3906....3-175
3908....3-175
3910....3-175
3913....3-166
3914....3-166
3915....3-166
3916....3-166
3917....3-166
3919....3-166
3920....3-166
3921....3-166
3922....3-166
3923....3-166
3930....3-172
3931....3-172
3932....3-172
3933....3-172
3940....3-177
3941....3-177
3942....3-177
3943....3-177
3944....3-177
3945....3-177
3946....3-177
3947....3-177
3948....3-177
3950....3-181
3951....3-181
3952....3-181
3953....3-182
3954....3-182
3955....3-182
3956....3-182
3957....3-182
3958....3-182
3959....8-43
3960....3-197
3961....3-196
3962....3-198
3963....3-202
3964....3-202
3965....3-203
3970....3-197
3971....3-196
3972....3-198
3974....3-202
3975....3-203
4001....3-139
4002....3-140
4003....3-141
4004....3-150
4005....3-150
4006....3-151
4007....3-152
4008....3-152
4009....3-153
4013....3-93
4014....3-107
4015....3-96
4016....3-108
4017....3-109
4020....3-106
4021....3-66
4022....3-68
4023....3-72
4024....6-86
4025....6-56
4026....6-57
4027....6-58
4028....6-70
4029....6-71
4030....6-72
4031....6-73
4032....6-74
4033....6-75
4041....3-125
4042....3-124
4051....6-87
4053....6-88
4055....6-89
4061....3-47
4080....3-74
4081....3-73
4101....3-91
4107....3-26
4108....3-75
4110....3-53
4111....3-97
4112....3-64
4113....3-87
4114....3-101
4115....3-88
4116....6-82
4117....3-28
4118....3-27
4119....3-76
4120....3-46
4121....3-99
4122....3-98
4123....3-63
4124....6-84
4125....3-67
4126....3-50
4127....3-51
4128....3-52
4129....3-49
4130....6-83
4131....6-85
4132....3-116
4133....6-76
4134....3-118
4135....3-69
4136....3-117
4137....6-77
4138....3-119
4139....6-78
4140....3-62
4141....3-61
4142....6-79
4143....3-55
4145....3-57
4147....6-81
4148....6-80

Visit product pages for additional size, anodize and color options.

Index

Part Number Index

4149....3-142
4150....3-44
4151....3-45
4152....3-48
4153....3-146
4154....3-146
4155....3-65
4156....3-147
4157....3-148
4158....3-148
4159....3-149
4160....3-70
4161....6-67
4162....6-68
4163....6-69
4164....3-59
4165....3-31
4166....3-30
4167....3-29
4168....6-64
4169....6-65
4170....3-71
4171....6-66
4172....6-59
4174....3-127
4175....3-94
4176....3-85
4177....6-55
4178....6-63
4180....6-61
4181....6-53
4183....6-62
4184....6-54
4185....6-60
4186....3-138
4187....3-136
4188....3-137
4195....3-145
4196....3-143
4197....3-144
4198....3-144
4199....3-143
4250....3-86
4251....3-105
4260....3-92
4265....3-77
4266....3-100
4280....3-86
4281....3-105
4285....3-95
4286....3-95
4290....3-92
4295....3-77
4296....3-100
4301....3-88
4302....3-76
4303....3-87
4304....3-101
4305....3-28
4306....3-27
4307....3-26
4308....3-99
4309....3-98
4310....3-63
4311....3-97
4312....3-64
4313....6-69
4315....3-54
4316....3-53
4317....6-82
4318....6-84
4319....6-83
4320....3-46
4321....6-64
4322....6-65
4323....6-66
4324....6-85
4325....3-67
4326....3-50
4327....3-51
4328....3-52
4329....3-49
4330....3-56
4331....3-55
4332....3-116
4333....6-76
4334....3-118
4335....3-69
4336....3-117
4337....6-77
4338....3-119
4339....6-78
4340....3-62
4341....3-61
4342....6-79
4343....6-59
4345....3-58
4346....3-57
4347....6-81
4348....6-80
4349....3-142
4350....3-44
4351....3-45
4352....3-48
4353....3-146
4354....3-146
4355....3-65
4356....3-147
4357....3-148
4358....3-148
4359....3-149
4360....3-70
4361....3-59
4362....3-60
4363....6-67
4364....6-68
4365....3-31
4366....3-30
4367....3-29
4370....3-71
4371....3-134
4372....3-132
4375....3-94
4376....3-85
4377....6-55
4379....6-63
4380....6-61
4381....6-53
4383....6-62
4384....6-54
4385....6-60
4386....3-138
4387....3-136
4388....3-137
4390....3-131
4392....3-133
4394....3-135
4395....3-145
4396....3-143
4397....3-144
4398....3-144
4399....3-143
4401....3-139
4402....3-140
4403....3-141
4404....3-150
4405....3-150
4406....3-151
4407....3-152
4408....3-152
4409....3-153
4413....3-93
4414....3-107
4415....3-96
4416....3-108
4417....3-109
4420....3-106
4421....3-66
4422....3-68
4423....3-72
4424....6-86
4425....6-56
4426....6-57
4427....6-58
4428....6-70
4429....6-71
4430....6-72
4431....6-73
4432....6-74
4433....6-75
4441....3-125
4442....3-124
4451....6-87
4453....6-88
4455....6-89
4461....3-47
4468....3-127
4480....3-74
4481....3-73
4483....4-141
4486....4-131
4487....4-132
4488....4-104
4489....4-103

Visit product pages for additional size, anodize and color options.

80/20 BUILD YOUR IDEA
More on 80/20® products available at 8020.net

Part Number Index

4490....4-38
4503....3-111
4504....3-112
4505....3-36
4506....3-35
4509....3-110
4510....3-32
4511....3-113
4512....3-114
4513....3-115
4514....3-37
4515....3-38
4518....3-43
4519....3-41
4520....3-42
4521....3-33
4522....3-34
4523....3-39
4524....3-40
4600....3-205
4601....3-205
4605....3-206
4606....3-206
4607....3-206
4608....3-206
4609....3-206
4610....3-206
4611....3-206
4615....3-205
4616....3-205
4625....3-209
4626....3-209
4700....3-208
4701....3-207
4702....3-208
5005....9-6
5010....9-6
5015....9-6
5020....9-6
5025....9-6
5030....9-6
5035....9-5
5036....9-5
5040....9-5
5041....9-5
5045....9-5
5046....9-5
5050....7-2
5100....7-2
5125....7-3
5150....7-3
5200....7-2
5250....7-3
5300....7-2
5340....7-14
5350....7-3
5360....7-13
5370....7-13
5400....7-4
5415....7-5
5425....7-5
5450....7-4
5475....7-5
5525....7-5
5550....7-8
5575....7-7
5600....7-8
5625....7-7
5650....7-9
5675....7-7
5700....7-6
5750....7-6
5845....7-10
5850....7-10
5860....7-11
5870....7-11
5880....7-11
5890....7-11
5900....7-10
5910....7-12
5920....7-12
5930....7-12
5940....7-12
5950....7-10
6000....11-3
6001....11-4
6002....11-4
6003....11-4
6004....11-4
6005....11-2
6010....11-2
6020....11-3
6030....11-3
6040....11-2
6050....11-3
6055....11-6
6060....11-7
6064....11-5
6065....11-6
6066....11-5
6067....11-5
6069....11-5
6070....11-7
6072....11-5
6073....11-5
6074....11-5
6075....11-8
6076....11-8
6080....11-6
6090....11-4
6095....11-4
6100....11-2
6105....11-3
6110....11-3
6111....11-2
6115....11-7
6117....3-208, 11-7
6120....11-8
6121....11-8
6130....11-8
6131....11-8
6135....11-8
6136....11-8
6160....11-7
6415....6-7
6423....6-15
6424....6-17
6425....6-11
6426....6-13
6490....6-42
6491....6-42
6515....6-7
6516....6-9
6523....6-15
6524....6-17
6525....6-11
6526....6-13
6530....6-19
6531....6-21
6533....6-27
6534....6-29
6535....6-23
6536....6-25
6590....6-42
6591....6-42
6595....6-43
6596....6-43
6700....6-47
6701....6-47
6702....6-48
6703....6-48
6705....6-45
6706....6-45
6710....4-64
6715....6-7
6716....6-9
6723....6-15
6724....6-17
6725....6-11
6726....6-13
6730....6-34
6731....6-34
6732....6-35
6733....6-35
6734....6-36
6735....6-36
6736....6-37
6737....6-37
6760....6-30
6762....6-31
6764....6-32
6766....6-33
6780....6-49
6782....6-49
6792....6-46
6793....6-46
6797....6-44
6798....6-44
6800....6-50
6801....6-51
6802....6-51
6803....6-52
6804....6-52
6805....6-50

Visit product pages for additional size, anodize and color options.

Index

Part Number Index

6806....6-50
6807....6-50
6808....4-64
6810....6-47
6811....6-47
6812....6-48
6813....6-48
6814....6-45
6815....6-7
6816....6-9
6816....6-9
6817....6-45
6823....6-15
6824....6-17
6825....6-11
6826....6-13
6830....6-19
6831....6-21
6833....6-27
6834....6-29
6835....6-23
6836....6-25
6847....7-14
6850....6-50
6851....6-52
6852....6-52
6860....6-30
6862....6-31
6864....6-32
6866....6-33
6870....6-34
6871....6-34
6872....6-34
6873....6-35
6874....6-35
6875....6-35
6876....6-36
6877....6-36
6878....6-36
6879....6-37
6881....6-49
6882....6-49
6883....6-37
6884....6-37
6892....6-46
6893....6-46
6897....6-44
6898....6-44
7000....10-2
7001....10-2
7003....10-2
7005....10-2
7006....10-3
7007....10-3
7008....10-3
7009....10-3
7010....10-2
7012....10-2
7013....10-2
7014....10-3
7015....10-3
7016....10-3
7017....10-3
7020....10-2
7021....10-2
7023....10-2
7024....10-3
7025....10-3
7026....10-3
7028....10-3
7029....10-3
7030....10-2
7031....10-3
7032....10-3
7033....10-3
7035....10-3
7036....10-3
7037....10-3
7038....10-3
7039....10-3
7040....10-7
7041....10-7
7042....10-7
7043....10-7
7045....10-3
7046....10-3
7047....10-3
7048....10-3
7049....10-3
7050....10-5
7051....10-5
7052....10-3
7053....10-3
7054....10-3
7055....10-3
7056....10-3
7057....10-3
7058....10-20
7059....10-3
7060....10-3
7061....10-3
7062....10-21
7063....10-3
7064....10-3
7065....10-10
7066....10-10
7067....10-3
7068....10-21
7070....10-10
7071....10-10
7072....10-10
7073....10-10
7074....10-12
7075....10-10
7076....10-10
7079....10-12
7080....10-13
7081....10-13
7082....10-12
7083....10-12
7084....10-13
7085....10-10
7086....10-13
7087....10-10
7090....10-13
7092....10-12
7093....10-13
7094....10-12
7095....10-26
7098....10-19
7099....10-19
7100....10-26
7101....10-19
7102....10-19
7103....10-19
7104....10-19
7105....10-25
7106....10-25
7110....10-18
7117....10-7
7118....10-7
7150....10-26
7151....10-26
7152....10-45
7153....10-26
7155....10-26
7156....10-45
7157....10-45
7158....10-45
7159....10-45
7161....10-34
7162....10-43
7163....10-43
7164....10-43
7165....8-59
7166....10-45
7167....10-26
7168....10-26
7169....10-26
7170....10-26
7171....10-43
7172....10-43
7173....10-43
7174....10-45
7175....10-45
7176....10-27
7177....10-45
7178....10-45
7179....10-27
7180....10-45
7181....10-45
7182....10-43
7183....10-43
7184....10-43
7185....10-45
7186....10-45
7187....10-27
7188....10-45
7189....10-45
7190....10-43
7191....10-43
7192....10-43
7193....10-45
7194....10-45

Visit product pages for additional size, anodize and color options.

80/20 BUILD YOUR IDEA
More on 80/20® products available at 8020.net

Part Number Index

7195....10-27
7196....10-45
7197....10-45
7198....10-45
7199....10-45
7200....10-45
7201....10-45
7202....10-28
7203....10-28
7204....10-32
7205....10-2
7206....10-26
7207....10-26
7208....10-26
7209....10-26
7210....10-2
7211....10-30
7212....10-2
7213....10-2
7214....10-30
7215....10-31
7216....10-31
7217....10-33
7218....10-33
7219....10-34
7221....10-27
7222....10-27
7224....10-2
7231....10-29
7232....10-29
7233....10-29
7234....10-29
7235....10-29
7236....10-29
7240....10-14
7241....10-15
7243....10-15
7244....10-14
7245....10-15
7246....10-5
7247....10-15
7248....10-14
7256....10-8
7257....10-8
7300....10-25
7301....10-25
7302....10-25
7305....10-16
7310....10-2
7311....10-31
7312....10-31
7313....10-37
7315....10-17
7320....10-32
7400....10-23
7401....10-23
7422....10-35
7423....10-35
7500....10-27
7501....10-27
7502....10-30
7503....10-30
7504....10-28
7505....10-28
7507....10-44
7508....10-44
7509....10-44
7510....10-37
7511....10-44
7512....10-44
7513....10-45
7514....10-45
7515....10-33
7516....10-33
7520....10-38
7521....10-38
7522....10-35
7523....10-35
7530....10-26
7531....10-26
7532....10-26
7533....10-26
7540....10-27
7541....10-27
7542....10-27
7543....10-27
7580....10-39
7581....10-39
7582....10-39
7583....10-39
7584....10-40
7585....10-40
7586....10-40
7587....10-40
7588....10-41
7589....10-41
7593....10-42
7594....10-42
7595....10-42
7596....10-42
7597....10-29
7598....10-29
7599....10-29
7600....10-29
7601....10-29
7602....10-29
8020....11-8
8030....11-8
8110....9-4
8111....9-4
8115....9-4
8116....9-4
8120....9-4
8121....9-4
8125....9-4
8126....9-4
8210....9-7
8211....9-7
8212....9-7
8213....9-7
8215....9-7
8216....9-7
8217....9-7
8218....9-7
8220....9-7
8221....9-7
8222....9-7
8223....9-7
8225....9-7
8226....9-7
8230....9-7
8231....9-7
8232....9-7
8233....9-7
8235....9-7
8236....9-7
8240....9-7
8241....9-7
8303....9-2
8304....9-2
8305....9-3
8306....9-3
8307....9-2
8308....9-2
8310....9-2
8311....9-2
8313....9-3
8314....9-3
8315....9-2
8316....9-2
8317....9-2
8318....9-2
8319....9-3
8320....9-2
8321....9-2
8322....9-2
8323....9-2
8325....9-2
8326....9-2
8327....9-2
8328....9-2
8330....9-2
8331....9-2
8335....9-2
8336....9-2
8337....9-2
8338....9-2
8340....9-2
8341....9-2
8342....9-2
8343....9-2
8345....9-2
8346....9-2
8360....9-2
8361....9-2
8365....9-2
8366....9-2
8370....9-2
8371....9-2
8375....9-2
8376....9-2
8385....9-2
8386....9-2
8390....9-2

Visit product pages for additional size, anodize and color options.

Index

Part Number Index

8391....9-2
8392....9-3
8394....9-3
8395....9-3
8397....9-3
8399....9-3
8400....9-3
8401....9-3
8402....9-3
8403....9-3
8405....9-3
8406....9-3
8407....9-3
8408....9-3
8413....9-4
8414....9-4
8415....9-8
8416....9-8
8417....9-13
8418....9-13
8419....9-3
8420....9-3
8422....9-3
8424....9-3
8426....9-13
8427....9-13
8445....9-11
8446....9-11
8448....9-11
8449....9-11
8507....9-19
8508....9-19
8510....9-18
8511....9-18
8512....9-18
8513....9-18
8515....9-18
8516....9-18
8520....9-14
8521....9-14
8525....9-15
8526....9-15
8527....9-15
8528....9-15
8530....9-14
8531....9-14
8535....9-15
8536....9-15
8540....9-15
8541....9-15
8545....9-10
8546....9-10
8547....9-10
8548....9-10
8550....9-12
8551....9-12
8555....9-12
8556....9-12
8560....9-9
8561....9-9
8565....9-13
8566....9-13
8567....9-13
8568....9-13
8570....9-20
8575....9-20
8580....9-16
8581....9-16
8582....9-16
8583....9-16
8584....9-17
8585....9-17
8586....9-17
8587....9-17
8591....9-12
8592....9-12
8593....9-12
8594....9-12
8600....9-5
8601....9-5
8605....9-5
8606....9-5
8610....9-18
8611....9-18
8620....9-9
8621....9-9
8625....9-9
8626....9-9
8630....9-9
8631....9-9
8635....9-9
8636....9-9
8703....9-3
8704....9-3
8710....9-3
8711....9-3
8713....9-3
8714....9-3
8720....9-3
8721....9-3
8722....9-3
8723....9-3
8724....9-3
8725....9-3
8900....3-158
8901....3-158
9000....2-101
9005....2-101
9010....2-102
9015....2-102
9025....2-103
9030....2-103
9035....2-104
9110....8-16
9113....3-215
9115....3-210
9120....3-210
9130....3-212
9140....3-211
9150....3-212
9153....3-216
9160....3-213
9170....3-213
9180....3-214
9190....3-214
9198....3-215
9210....8-16
9213....3-215
9215....3-210
9220....3-210
9230....3-212
9240....3-211
9242....3-211
9245....3-218
9250....3-212
9253....3-216
9260....3-213
9270....3-213
9273....3-217
9275....3-217
9280....3-214
9290....3-214
9300....4-60
9301....3-185
9302....3-185
9305....4-61
9306....3-185
9307....3-185
9310....4-60
9315....4-129
9320....3-185
9325....3-185
9330....3-218
9350....5-35
9351....5-35
9355....4-39
9356....4-39
9361....5-5
9700....2-97
9701....2-97
9705....2-98
9706....2-98
9725....2-99
9726....2-99
9728....2-100
9740....8-59
9750....9-19
9755....8-16
9755-Plain....8-16
9760....3-208
9820....8-61
9821....8-61
9822....8-61
9823....8-61
9824....8-61
9825....8-61
9826....8-61
9827....8-61
9828....8-61
9829....8-61
9830....8-61
9831....8-61
9840....8-59
9841....8-59

Visit product pages for additional size, anodize and color options.

80/20 BUILD YOUR IDEA
More on 80/20® products available at 8020.net

Part Number Index

9842....8-59
9843....8-59
9844....8-59
9845....8-59
9846....8-59
9847....8-59
9848....8-59
9860....8-62
9861....8-62
9862....8-62
9863....8-62
9864....8-62
9865....8-62
9866....8-62
9867....8-62
9868....8-62
12000....4-110
12003....8-20
12004....8-20
12006....8-22
12013....8-20
12015....8-40
12016....8-40
12017....4-66
12018....4-66
12019....4-133
12020....4-66
12021....4-66
12022....4-66
12024....4-66
12026....8-26
12027....8-26
12028....5-34
12030....3-80
12031....3-79
12032....3-82
12033....3-81
12034....3-83
12035....3-84
12036....3-102
12037....3-102
12038....3-90
12039....3-103
12040....3-104
12041....8-15
12043....8-15
12044....8-15
12045....8-15
12047....8-15
12050....4-32
12051....4-33
12053....4-33
12055....4-33
12057....4-34
12058....4-34
12062....4-100
12064....4-101
12065....4-101
12067....4-97
12068....4-90
12069....4-90
12070....4-90
12071....4-89
12072....4-88
12073....4-88
12074....4-96
12075....4-96
12080....4-94
12084....4-105
12085....4-106
12086....4-106
12087....4-106
12088....4-105
12089....4-105
12093....4-102
12094....4-102
12095....4-85
12096....4-102
12097....4-107
12098....4-97
12099....4-97
12101....4-86
12102....4-86
12104....4-86
12105....4-86
12107....4-97
12108....4-97
12110....4-86
12111....4-86
12113....4-86
12114....4-86
12116....4-97
12117....4-97
12119....4-86
12120....4-86
12122....4-86
12123....4-86
12125....4-97
12126....4-97
12128....4-86
12129....4-86
12131....4-86
12132....4-86
12134....4-97
12136....4-97
12137....4-86
12139....4-86
12140....4-86
12142....4-86
12145....4-122
12146....4-122
12147....4-122
12162....4-99
12165....4-99
12167....8-60
12168....5-29
12170....5-25
12172....5-25
12174....5-25
12176....5-25
12178....5-25
12181....5-25
12182....5-25
12185....5-25
12186....5-25
12192....5-27
12194....5-28
12195....5-26
12197....5-26
12198....5-26
12200....5-26
12201....5-26
12203....5-26
12204....5-26
12211....5-26
12213....5-26
12215....5-26
12216....5-26
12217....5-26
12218....5-26
12221....5-26
12222....5-26
12223....5-26
12224....5-26
12227....5-26
12228....5-26
12229....5-26
12230....5-26
12231....5-26
12232....5-26
12233....5-26
12234....5-26
12237....5-26
12238....5-26
12239....5-26
12240....5-26
12241....5-26
12242....5-26
12243....5-26
12245....5-26
12246....5-26
12247....5-26
12248....5-26
12249....5-26
12250....5-26
12252....4-96
12254....4-98
12255....4-100
12256....4-100
12258....8-13
12259....8-13
12260....8-13
12261....8-13
12262....8-13
12269....8-13
12271....8-13
12279....8-14
12283....8-14
12286....8-14
12287....8-14
12290....8-13
12298....8-13
12299....3-89
12300....8-31

Visit product pages for additional size, anodize and color options.

Index

Part Number Index

12302....8-13
12303....8-13
12305....8-13
12306....8-13
12307....8-13
12314....8-27
12315....8-27
12316....8-27
12317....8-27
12319....8-26
12320....8-26
12321....8-26
12322....4-93
12326....4-93
12327....4-93
12328....8-31
12390....5-26
12392....5-26
12394....5-26
12396....5-26
12400....5-26
12402....5-26
12408....5-26
13001....3-22
13003....3-184
13004....3-184
13006....3-184
13018....3-166
13021....3-166
13022....3-162
13023....3-162
13024....3-162
13025....3-162
13027....3-167
13028....3-167
13029....3-167
13030....3-169
13031....3-167
13032....3-167
13033....3-169
13034....3-167
13035....3-167
13036....3-169
13037....3-167
13038....3-169
13039....3-167
13040....3-167
13041....3-169
13046....3-162
13047....3-162
13048....3-162
13049....3-162
13050....3-160
13051....3-160
13052....3-160
13053....3-160
13054....3-160
13055....3-160
13058....3-168
13059....3-170
13060....3-168
13061....3-170
13062....3-168
13063....3-170
13064....3-161
13065....3-161
13066....3-161
13082....3-167
13083....3-167
13084....3-167
13088....3-168
13089....3-170
13090....3-168
13091....3-170
13092....3-168
13093....3-170
13094....3-168
13095....3-170
13096....3-168
13098....3-168
13099....8-46
13106....3-174
13107....3-174
13108....3-174
13109....3-174
13110....3-172
13111....3-172
13112....3-172
13113....3-172
13114....3-172
13115....3-172
13114....3-172
13116....3-172
13117....3-172
13118....3-172
13119....3-172
13120....3-173
13121....3-173
13122....3-173
13123....3-173
13124....3-173
13125....3-173
13127....3-173
13129....3-173
13130....3-173
13132....3-173
13133....3-173
13134....3-192
13135....3-192
13136....3-192
13137....3-192
13138....3-192
13139....3-192
13140....3-192
13141....3-192
13142....3-192
13143....3-192
13144....3-192
13145....3-192
13146....3-192
13147....3-192
13148....3-192
13169....3-192
13170....3-192
13171....3-192
13172....3-192
13173....3-192
13174....3-192
13175....3-192
13176....3-192
13177....3-192
13178....3-192
13179....3-171
13180....3-171
13181....3-171
13182....3-171
13183....3-13
13184....3-12
13185....3-13
13186....3-12
13187....3-22
13188....3-22
13189....3-23
13190....3-23
13192....3-23
13193....3-20
13194....3-22
13195....3-22
13197....8-23
13198....8-23
13199....8-23
13200....8-23
14000....5-31
14001....5-32
14002....5-31
14003....5-32
14004....5-31
14005....5-32
14006....5-31
14007....5-32
14008....5-31
14009....5-32
14010....5-33
14011....3-129
14012....3-22
14013....3-22
14014....3-129
14016....3-129
14017....3-129
14018....3-129
14019....3-129
14021....5-41
14023....5-41
14025....5-41
14027....5-41
14028....5-41
14029....5-41
14030....5-41
14032....5-41
14035....5-43
14037....5-43
14039....5-43
14041....5-43
14043....5-43

Visit product pages for additional size, anodize and color options.

80/20 BUILD YOUR IDEA
More on 80/20® products available at 8020.net

Part Number Index

14045....5-43
14047....5-43
14051....3-80
14052....3-80
14053....3-80
14054....3-80
14056....3-80
14057....3-89
14058....3-89
14059....3-79
14060....3-79
14061....3-79
14062....3-82
14065....3-82
14066....3-82
14067....3-82
14068....3-89
14070....3-89
14071....3-81
14073....3-81
14074....3-83
14075....3-83
14076....3-83
14077....3-83
14078....3-83
14079....3-83
14080....3-89
14081....3-89
14083....3-84
14085....3-84
14086....3-89
14088....3-89
14089....3-102
14092....3-84
14095....3-102
14098....3-90
14099....3-90
14100....3-90
14101....3-90
14102....3-90
14103....3-90
14104....3-103
14105....3-103
14107....8-19
14108....8-19
14110....8-19
14111....3-104
14112....3-121
14113....3-120
14114....3-120
14116....3-24
14117....3-130
14118....8-10
14120....3-78
14121....8-19
14122....3-163
14123....8-19
14124....3-163
14125....3-163
14126....3-163
14127....3-163
14128....3-163
14129....3-163
14130....3-163
14131....3-163
14132....3-24
14133....3-24
14135....3-123
14136....3-25
14137....3-25
14138....4-31
14139....4-31
14140....4-31
14142....4-31
14143....4-31
14148....4-31
14154....3-122
14155....8-42
14156....3-190
14157....4-138
14158....8-41
14159....3-163
14160....4-138
14161....3-171
14162....3-172
14164....3-172
14165....3-172
14166....3-172
14167....4-31
14170....3-122
14171....3-123
14172....3-122
14173....3-123
14174....3-122
14175....3-123
14176....3-122
14177....3-123
14185....4-31
14186....4-31
14188....4-31
14189....4-31
14190....4-31
14191....4-31
14192....4-32
14193....8-20
14196....3-186
33440....3-19
33450....3-19
33460....3-19
33470....3-19
33490....3-19
33530....3-19
11-2525....3-184
11-4065....3-189
11-4310....3-178
11-4312....3-178
11-4510....3-182
11-4512....3-182
11-4516....3-182
11-4710....3-180
11-4712....3-180
11-5065....3-189
11-5308....3-178
11-5310....3-178
11-5312....3-178
11-5314....3-178
11-5316....3-178
11-5510....3-182
11-5512....3-182
11-5516....3-182
11-5518....3-182
11-5520....3-182
11-5708....3-180
11-5710....3-180
11-5712....3-180
11-5714....3-180
11-5716....3-180
11-6039....3-188
11-6040....3-188
11-6041....3-188
11-6042....3-188
11-6065....3-189
11-6310....3-178
11-6312....3-178
11-6314....3-178
11-6316....3-178
11-6318....3-178
11-6320....3-178
11-6510....3-182
11-6512....3-182
11-6514....3-182
11-6516....3-182
11-6518....3-182
11-6520....3-183
11-6525....3-183
11-6530....3-183
11-6535....3-183
11-6540....3-183
11-6714....3-180
11-6716....3-180
11-6718....3-180
11-6720....3-180
11-8065....3-189
11-8312....3-178
11-8316....3-178
11-8318....3-178
11-8320....3-178
11-8325....3-179
11-8512....3-183
11-8516....3-183
11-8518....3-183
11-8520....3-183
11-8525....3-183
11-8530....3-183
11-8535....3-183
11-8540....3-183
11-8716....3-180
11-8720....3-180
13-1520....3-184
13-1525....3-184
13-1914....3-187
13-1922....3-187
13-1957....3-184
13-1993....3-184

Visit product pages for additional size, anodize and color options.

Index

Part Number Index

13-2065 3-189
13-2247 3-187
13-3753 3-185
13-3758 3-190
13-3759 3-190
13-3940 3-178
13-3941 3-178
13-3943 3-179
13-3944 3-179
13-3945 3-179
13-3946 3-179
13-3947 3-179
13-3948 3-179
13-3950 3-183
13-3951 3-183
13-3952 3-183
13-3953 3-183
13-3954 3-183
13-3955 3-184
13-3956 3-184
13-3957 3-184
13-3958 3-184
13-5065 3-189
13-5310 3-178
13-5312 3-178
13-5316 3-178
13-5320 3-178
13-5510 3-182
13-5512 3-182
13-5516 3-182
13-5518 3-182
13-5520 3-182
13-5525 3-182
13-5530 3-182
13-5712 3-180
13-6040 3-188
13-6041 3-188
13-6042 3-188
13-6043 3-188
13-6044 3-188
13-6045 3-188
13-6065 3-189
13-6310 3-178
13-6312 3-178
13-6316 3-178
13-6320 3-178
13-6325 3-178
13-6410 3-179
13-6412 3-179
13-6416 3-179
13-6508 3-182
13-6510 3-182
13-6512 3-182
13-6516 3-182
13-6520 3-183
13-6525 3-183
13-6530 3-183
13-6535 3-183
13-6540 3-183
13-6710 3-180
13-6712 3-180
13-6716 3-180
13-8065 3-189
13-8312 3-178
13-8316 3-178
13-8320 3-178
13-8325 3-179
13-8416 3-179
13-8425 3-179
13-8512 3-183
13-8516 3-183
13-8518 3-183
13-8520 3-183
13-8522 3-183
13-8525 3-183
13-8530 3-183
13-8535 3-183
13-8540 3-183
13-8550 3-184
13-8712 3-180
13-8716 3-180
13-8720 3-180
17-5310 3-178
17-5312 3-178
17-5316 3-178
17-5510 3-182
17-5512 3-182
17-5516 3-182
17-5520 3-182
17-6041 3-188
17-6042 3-188
17-6065 3-189
17-6310 3-178
17-6312 3-178
17-6316 3-178
17-6320 3-178
17-6410 3-179
17-6412 3-179
17-6416 3-179
17-6510 3-182
17-6512 3-182
17-6516 3-182
17-6520 3-183
17-6712 3-180
17-8312 3-178
17-8316 3-178
17-8320 3-178
17-8325 3-179
17-8416 3-179
17-8425 3-179
17-8512 3-183
17-8516 3-183
17-8520 3-183
17-8525 3-183
17-8530 3-183
17-8535 3-183
17-8540 3-184
19-1065 3-189
19-2065 3-189
19-6041 3-188
19-6042 3-188
19-6065 3-189
19-6312 3-178
19-6316 3-178
19-6320 3-178
19-6325 3-178
19-6512 3-182
19-6516 3-182
19-6520 3-183
19-6525 3-183
19-8065 3-189
19-8312 3-178
19-8316 3-178
19-8320 3-179
19-8325 3-179
19-8512 3-183
19-8516 3-183
19-8520 3-183
19-8525 3-183
19-8530 3-183
19-8920 3-191
19-8925 3-191
19-8930 3-191
19-8935 3-191
19-8945 3-191
20-2020 2-58
20-2040 2-59
20-2490 4-46
20-2491 4-54
20-2492 4-52
20-2493 4-48
20-2494 4-55
20-2495 4-53
20-2496 4-40
20-2497 4-42
20-2565 8-7
20-2566 8-7
20-2567 8-7
20-2568 8-7
20-2570 8-7
20-2575 8-7
20-3681 3-16
20-3895 3-16
20-4040 2-60
20-4080 3-74
20-4081 3-73
20-4107 3-26
20-4113 3-87
20-4117 3-28
20-4118 3-27
20-4119 3-76
20-4165 3-31
20-4166 3-30
20-4167 3-29
20-4176 3-85
20-7005 10-2
20-7020 10-2
20-7030 10-2
20-7042 10-7
20-7046 10-3
20-7047 10-3
20-7061 10-3
20-7063 10-3
20-7064 10-3

Visit product pages for additional size, anodize and color options.

80/20® BUILD YOUR IDEA

More on 80/20® products available at 8020.net

Part Number Index

20-7065 10-10
20-7067 10-3
20-7069 10-5
20-7075 10-10
20-7080 10-13
20-7082 10-12
20-7085 10-10
20-7090 10-13
20-7092 10-12
20-7202 10-28
20-7211 10-30
20-7215 10-31
20-7231 10-29
20-7311 10-31
20-7504 10-28
20-7507 10-44
20-7509 10-44
20-7512 10-30
20-7593 10-42
20-7594 10-42
20-7597 10-29
20-8210 9-7
20-8211 9-7
20-8212 9-7
20-8213 9-7
20-8515 9-18
20-8516 9-18
25-1941 3-155
25-1951 3-155
25-1954 3-158
25-1956 3-164
25-1961 3-154
25-1962 3-156
25-1964 3-158
25-1966 3-164
25-2015 8-11
25-2025 8-11
25-2028 8-11
25-2059 4-63
25-2062 4-108
25-2064 4-76
25-2065 4-77
25-2066 4-78
25-2067 4-62
25-2071 4-92
25-2073 4-70
25-2074 4-72
25-2075 4-71
25-2076 4-73
25-2077 4-74
25-2078 4-75
25-2081 4-91
25-2086 4-95
25-2099 8-40
25-2112 8-18
25-2113 8-18
25-2114 8-18
25-2116 4-138
25-2118 4-138
25-2122 4-127
25-2128 5-40
25-2129 5-40
25-2131 5-42
25-2132 5-42
25-2137 5-40
25-2139 5-42
25-2142 5-44
25-2151 8-48
25-2152 8-48
25-2154 8-50
25-2157 8-56
25-2159 8-50
25-2177 4-138
25-2186 5-19
25-2192 5-23
25-2193 5-24
25-2205 5-21
25-2211 4-65
25-2221 4-65
25-2281 4-67
25-2341 8-49
25-2349 8-51
25-2361 5-40
25-2362 5-42
25-2380 5-49
25-2385 5-49
25-2387 5-49
25-2406 5-38
25-2414 5-51
25-2416 5-51
25-2418 5-36
25-2419 5-36
25-2427 4-28
25-2428 4-37
25-2439 8-56
25-2451 8-57
25-2489 4-36
25-2490 4-46
25-2491 4-54
25-2492 4-52
25-2493 4-48
25-2494 4-55
25-2495 4-53
25-2496 4-40
25-2497 4-42
25-2501 2-61
25-2502 2-62
25-2503 2-62
25-2504 2-63
25-2512 4-44
25-2514 2-64
25-2521 4-50
25-2522 4-56
25-2523 4-51
25-2524 4-57
25-2525 2-61
25-2527 2-63
25-2550 2-66
25-2565 8-8
25-2566 8-8
25-2567 8-8
25-2568 8-8
25-2570 8-8
25-2575 8-8
25-2576 2-67
25-2750 4-68
25-2751 4-69
25-2752 4-68
25-2753 4-69
25-2761 4-121
25-2796 6-90
25-2798 6-90
25-2816 8-19
25-2817 8-19
25-2818 8-19
25-2819 8-19
25-2820 8-19
25-2821 8-19
25-2828 8-22
25-2830 4-81
25-2831 4-82
25-2835 4-83
25-2837 4-79
25-2838 4-80
25-2841 4-83
25-2843 8-45
25-2844 8-45
25-2850 8-46
25-2882 4-108
25-3085 3-175
25-3086 3-175
25-3094 3-14
25-3096 3-14
25-3183 3-17
25-3204 3-158
25-3206 3-158
25-3266 8-12
25-3272 8-11
25-3312 3-165
25-3313 3-165
25-3363 3-12
25-3369 3-15
25-3376 3-164
25-3382 3-154
25-3383 3-17
25-3391 3-13
25-3392 3-12
25-3396 3-13
25-3501 3-187
25-3502 3-188
25-3503 3-188
25-3625 3-186
25-3626 3-186
25-3681 3-16
25-3682 3-16
25-3766 8-12
25-3895 3-16
25-3896 3-12
25-4024 6-86
25-4025 6-56
25-4026 6-57
25-4027 6-58
25-4028 6-70
25-4029 6-71

Visit product pages for additional size, anodize and color options.

Index

Part Number Index

25-4030 6-72
25-4031 6-73
25-4032 6-74
25-4033 6-75
25-4051 6-87
25-4053 6-88
25-4055 6-89
25-4080 3-74
25-4081 3-73
25-4107 3-26
25-4108 3-75
25-4111 3-97
25-4112 3-64
25-4113 3-87
25-4114 3-101
25-4115 3-88
25-4116 6-82
25-4117 3-28
25-4118 3-27
25-4119 3-76
25-4120 3-46
25-4124 6-84
25-4125 3-67
25-4128 3-52
25-4129 3-49
25-4132 3-116
25-4133 6-76
25-4134 3-118
25-4135 3-69
25-4136 3-117
25-4137 6-77
25-4138 3-119
25-4139 6-78
25-4140 3-62
25-4141 3-61
25-4148 6-80
25-4149 3-142
25-4150 3-44
25-4151 3-45
25-4152 3-48
25-4153 3-146
25-4154 3-146
25-4155 3-65
25-4156 3-147
25-4165 3-31
25-4166 3-30
25-4167 3-29
25-4168 6-64
25-4169 6-65
25-4170 3-71
25-4171 6-66
25-4172 6-59
25-4175 3-94
25-4176 3-85
25-4177 6-55
25-4178 6-63
25-4180 6-61
25-4181 6-53
25-4183 6-62
25-4184 6-54
25-4185 6-60
25-4186 3-138
25-4187 3-136
25-4188 3-137
25-4195 3-145
25-4196 3-143
25-4197 3-144
25-4198 3-144
25-4199 3-143
25-4250 3-86
25-4260 3-92
25-4265 3-77
25-4286 3-95
25-5010 2-69
25-5013 2-65
25-5050 2-68
25-6115 11-7
25-6120 11-8
25-6121 11-8
25-6131 11-8
25-6136 11-8
25-6160 11-7
25-6415 6-7
25-6423 6-15
25-6424 6-17
25-6425 6-11
25-6426 6-13
25-6490 6-42
25-6491 6-42
25-6700 6-47
25-6701 6-47
25-6702 6-48
25-6703 6-48
25-6705 6-45
25-6706 6-45
25-6710 4-64
25-6715 6-7
25-6716 6-9
25-6723 6-15
25-6724 6-17
25-6725 6-11
25-6726 6-13
25-6730 6-34
25-6731 6-34
25-6732 6-35
25-6733 6-35
25-6734 6-36
25-6735 6-36
25-6736 6-37
25-6737 6-37
25-6760 6-30
25-6762 6-31
25-6764 6-32
25-6766 6-33
25-6780 6-49
25-6782 6-49
25-6792 6-46
25-6793 6-46
25-6797 6-44
25-6798 6-44
25-6850 6-50
25-6851 6-52
25-6852 6-52
25-7000 10-2
25-7003 10-2
25-7005 10-2
25-7006 10-3
25-7007 10-3
25-7008 10-3
25-7009 10-3
25-7012 10-2
25-7013 10-2
25-7036 10-4
25-7037 10-4
25-7038 10-4
25-7039 10-4
25-7042 10-7
25-7043 10-7
25-7046 10-4
25-7047 10-4
25-7051 10-5
25-7061 10-3
25-7062 10-21
25-7063 10-3
25-7064 10-4
25-7066 10-10
25-7067 10-4
25-7070 10-10
25-7071 10-10
25-7072 10-10
25-7073 10-10
25-7074 10-12
25-7079 10-12
25-7081 10-13
25-7083 10-12
25-7084 10-13
25-7086 10-13
25-7098 10-19
25-7101 10-19
25-7202 10-28
25-7206 10-26
25-7207 10-26
25-7211 10-30
25-7215 10-31
25-7217 10-33
25-7231 10-29
25-7232 10-29
25-7233 10-29
25-7256 10-8
25-7311 10-31
25-7401 10-24
25-7422 10-35
25-7423 10-35
25-7502 10-30
25-7504 10-28
25-7507 10-44
25-7509 10-44
25-7515 10-33
25-7530 10-26
25-7531 10-26
25-7581 10-39
25-7582 10-39
25-7586 10-40
25-7589 10-41
25-7593 10-42
25-7594 10-42
25-7597 10-29
25-7598 10-29

Visit product pages for additional size, anodize and color options.

80/20 BUILD YOUR IDEA
More on 80/20® products available at 8020.net

Part Number Index

25-7599 10-29
25-8210 9-7
25-8211 9-7
25-8212 9-7
25-8213 9-7
25-8217 9-7
25-8218 9-7
25-8222 9-7
25-8223 9-7
25-8307 9-2
25-8308 9-2
25-8310 9-2
25-8311 9-2
25-8327 9-2
25-8328 9-2
25-8330 9-2
25-8331 9-2
25-8335 9-2
25-8336 9-2
25-8337 9-2
25-8338 9-2
25-8360 9-2
25-8361 9-2
25-8370 9-2
25-8371 9-2
25-8445 9-11
25-8446 9-11
25-8515 9-18
25-8516 9-18
25-8520 9-14
25-8521 9-14
25-8525 9-15
25-8526 9-15
25-8527 9-15
25-8528 9-15
25-8547 9-10
25-8548 9-10
25-8550 9-12
25-8551 9-12
25-8567 9-13
25-8568 9-13
25-8580 9-16
25-8581 9-16
25-8584 9-17
25-8585 9-17
25-8610 9-18
25-8611 9-18
25-8620 9-9
25-8621 9-9
25-8625 9-9
25-8626 9-9
25-8901 3-158
30-1961 3-155
30-2431 4-48
30-2432 4-46
30-2433 4-42
30-2434 4-40
30-2435 4-55
30-2436 4-54
30-2437 4-53
30-2438 4-52
30-2565 8-8
30-2566 8-8
30-2567 8-8
30-2568 8-8
30-2569 8-8
30-2570 8-8
30-2575 8-8
30-3001 2-70
30-3002 2-71
30-3003 2-71
30-3004 2-72
30-3022 2-72
30-3030 2-70
30-3060 2-73
30-3681 3-16
30-3789 3-154
30-3796 3-154
30-3891 3-16
30-4134 3-118
30-4302 3-76
30-4303 3-87
30-4305 3-28
30-4306 3-27
30-4307 3-26
30-4332 3-116
30-4335 3-69
30-4336 3-117
30-4338 3-119
30-4340 3-62
30-4351 3-45
30-4365 3-31
30-4366 3-30
30-4367 3-29
30-4376 3-85
30-4480 3-74
30-4481 3-73
30-6060 2-74
30-7010 10-2
30-7020 10-2
30-7030 10-2
30-7034 10-22
30-7044 10-7
30-7045 10-4
30-7048 10-4
30-7055 10-4
30-7056 10-4
30-7058 10-20
30-7059 10-4
30-7060 10-4
30-7065 10-10
30-7075 10-10
30-7080 10-13
30-7082 10-12
30-7085 10-10
30-7090 10-13
30-7092 10-12
30-7203 10-28
30-7204 10-32
30-7208 10-26
30-7209 10-26
30-7214 10-30
30-7216 10-31
30-7234 10-29
30-7246 10-5
30-7257 10-8
30-7312 10-31
30-7314 10-36
30-7320 10-32
30-7503 10-30
30-7505 10-28
30-7508 10-44
30-7511 10-44
30-7512 10-44
30-7522 10-35
30-7523 10-35
30-7532 10-26
30-7533 10-26
30-7595 10-42
30-7596 10-42
30-7600 10-29
30-8220 9-7
30-8221 9-7
30-8230 9-7
30-8231 9-7
30-8515 9-18
30-8516 9-18
30-8630 9-9
30-8631 9-9
30-8635 9-9
30-8636 9-9
40-1961 3-154
40-1964 3-159
40-1966 3-164
40-1968 3-165
40-1981 3-155
40-1982 3-156
40-1984 3-159
40-1986 3-164
40-1988 3-165
40-2030 8-11
40-2033 8-12
40-2035 8-13
40-2035-Plain 8-13
40-2037 8-13
40-2039 8-13
40-2043 8-13
40-2045 8-11
40-2050 8-11
40-2051 4-63
40-2052 4-118
40-2055 4-117
40-2060 4-108
40-2061 4-108
40-2063 4-117
40-2068 4-62
40-2079 4-109
40-2080 4-91
40-2085 4-95
40-2091 4-92
40-2093 4-70
40-2094 4-72
40-2095 4-71
40-2096 4-73
40-2097 4-74
40-2098 4-75
40-2100 8-40
40-2104 4-76

Visit product pages for additional size, anodize and color options.

Index

Part Number Index

40-2105 4-77
40-2106 4-78
40-2109 8-18
40-2110....8-18
40-2111....8-18
40-2115....4-138
40-2117....4-138
40-2119....8-17
40-2120 4-137
40-2121 4-127
40-2130 5-40
40-2135 5-40
40-2138 5-40
40-2140 5-42
40-2141 5-44
40-2145 5-42
40-2146 5-44
40-2147 5-37
40-2148 5-39
40-2150 8-48
40-2153 8-48
40-2155 8-50
40-2156 8-56
40-2160 8-50
40-2165 5-45
40-2170 5-46
40-2175 5-46
40-2178 4-138
40-2180 5-47
40-2206 5-21
40-2210 4-65
40-2220 4-65
40-2280 4-67
40-2290 4-67
40-2340 8-49
40-2350 8-51
40-2365 5-40
40-2366 5-42
40-2367 5-44
40-2390 5-49
40-2400 5-49
40-2407 5-38
40-2408 5-38
40-2409 5-38
40-2410 5-49
40-2415 5-51
40-2417 5-51
40-2420 5-36
40-2421 4-35
40-2422 4-35
40-2423 4-35
40-2425 4-28
40-2426 5-36
40-2430 4-37
40-2431 4-48
40-2432 4-46
40-2433 4-42
40-2434 4-40
40-2435 4-55
40-2436 4-54
40-2437 4-53
40-2438 4-52
40-2440 8-56
40-2441 8-56
40-2450 8-57
40-2488 4-36
40-2515 4-44
40-2517 4-50
40-2518 4-56
40-2519 4-51
40-2520 4-57
40-2525 8-8
40-2530 8-8
40-2535 8-8
40-2540 8-8
40-2545 8-8
40-2550 8-8
40-2555 8-8
40-2560 8-8
40-2561 8-8
40-2562 8-8
40-2563 8-8
40-2564 8-8
40-2578 8-9
40-2579 8-9
40-2580 8-9
40-2581 8-9
40-2700 5-12
40-2701 5-13
40-2704 5-12
40-2705 5-13
40-2708 5-12
40-2709 5-13
40-2712 5-12
40-2713 5-13
40-2715 5-16
40-2716 5-16
40-2717 5-16
40-2731 5-17
40-2754 4-68
40-2755 4-69
40-2756 4-69
40-2757 4-68
40-2758 4-69
40-2759 4-69
40-2760 4-121
40-2765 4-121
40-2797 6-90
40-2799 6-90
40-2822 8-19
40-2823 8-19
40-2824 8-19
40-2825 8-19
40-2826 8-19
40-2827 8-19
40-2832 4-81
40-2833 4-82
40-2836 4-83
40-2839 4-79
40-2840 4-80
40-2842 4-83
40-2845 8-45
40-2846 8-45
40-2849 8-46
40-2876 8-21
40-2877 8-21
40-2880 4-108
40-2881 4-108
40-2884 4-111
40-2885 4-111
40-2886 4-111
40-2887 4-111
40-3087 3-175
40-3088 3-175
40-3100 3-14
40-3102 3-14
40-3116....3-191
40-3120 3-191
40-3126 3-191
40-3134 3-191
40-3189 3-17
40-3202 3-159
40-3203 3-159
40-3267 8-12
40-3273 4-123
40-3274 8-11
40-3278 3-155
40-3282 3-164
40-3283 3-164
40-3286 3-154
40-3290 3-191
40-3310 3-165
40-3311....3-165
40-3346 3-176
40-3348 3-176
40-3354 3-13
40-3359 3-12
40-3361 3-13
40-3362 3-12
40-3368 3-21
40-3370 3-15
40-3373 3-12
40-3389 3-17
40-3500 3-187
40-3503 3-188
40-3628 3-186
40-3629 3-186
40-3650 3-180
40-3679 3-16
40-3680 3-16
40-3767 8-12
40-3891 3-16
40-3897 3-12
40-3913 3-166
40-3914 3-166
40-3915 3-166
40-4001 2-76
40-4002 2-77
40-4003 2-77
40-4004 2-78
40-4012 2-91
40-4020 2-82
40-4030-Lite 2-78
40-4040 2-76

Visit product pages for additional size, anodize and color options.

80/20 BUILD YOUR IDEA
More on 80/20® products available at 8020.net

Part Number Index

40-4040-Lite 2-75
40-4040-UL 2-75
40-4045-Lite 2-79
40-4080 2-86
40-4080-Lite 2-85
40-4080-UL 2-84
40-4082-Lite 2-87
40-4083-Lite 2-88
40-4084-Lite 2-89
40-4085-Lite 2-90
40-4093 2-80
40-4094 2-80
40-4096 2-81
40-4280 3-86
40-4285 3-95
40-4290 3-92
40-4295 3-77
40-4301 3-88
40-4302 3-76
40-4303 3-87
40-4304 3-101
40-4305 3-28
40-4306 3-27
40-4307 3-26
40-4308 3-99
40-4309 3-98
40-4311 3-97
40-4312 3-64
40-4316 3-53
40-4317 6-82
40-4318 6-84
40-4320 3-46
40-4321 6-64
40-4322 6-65
40-4323 6-66
40-4325 3-67
40-4328 3-52
40-4329 3-49
40-4330 3-56
40-4331 3-55
40-4332 3-116
40-4333 6-76
40-4334 3-118
40-4335 3-69
40-4336 3-117
40-4337 6-77
40-4338 3-119
40-4339 6-78
40-4340 3-62
40-4341 3-61
40-4343 6-59
40-4345 3-58
40-4346 3-57
40-4348 6-80
40-4349 3-142
40-4350 3-44
40-4351 3-45
40-4352 3-48
40-4353 3-146
40-4354 3-146
40-4355 3-65
40-4356 3-147
40-4361 3-59
40-4362 3-60
40-4365 3-31
40-4366 3-30
40-4367 3-29
40-4370 3-71
40-4372 3-132
40-4375 3-94
40-4376 3-85
40-4377 6-55
40-4379 6-63
40-4380 6-61
40-4381 6-53
40-4383 6-62
40-4384 6-54
40-4385 6-60
40-4386 3-138
40-4387 3-136
40-4388 3-137
40-4390 3-131
40-4394 3-135
40-4395 3-145
40-4396 3-143
40-4397 3-144
40-4398 3-144
40-4399 3-143
40-4424 6-86
40-4425 6-56
40-4426 6-57
40-4427 6-58
40-4428 6-70
40-4429 6-71
40-4430 6-72
40-4431 6-73
40-4432 6-74
40-4433 6-75
40-4441 3-126
40-4443 3-125
40-4451 6-87
40-4453 6-88
40-4455 6-89
40-4480 3-74
40-4481 3-73
40-4488 4-104
40-4489 4-103
40-6060 11-7
40-6070 11-7
40-6075 11-8
40-6076 11-8
40-6130 11-8
40-6135 11-8
40-6515 6-7
40-6516 6-9
40-6523 6-15
40-6524 6-17
40-6525 6-11
40-6526 6-13
40-6530 6-19
40-6531 6-21
40-6533 6-27
40-6534 6-29
40-6535 6-23
40-6536 6-25
40-6590 6-42
40-6591 6-42
40-6595 6-43
40-6596 6-43
40-6800 6-50
40-6801 6-51
40-6802 6-51
40-6803 6-52
40-6804 6-52
40-6805 6-50
40-6806 6-50
40-6807 6-50
40-6808 4-64
40-6810 6-47
40-6811 6-47
40-6812 6-48
40-6813 6-48
40-6814 6-45
40-6815 6-7
40-6816 6-9
40-6816 6-9
40-6817 6-45
40-6823 6-15
40-6824 6-17
40-6825 6-11
40-6826 6-13
40-6830 6-19
40-6831 6-21
40-6833 6-27
40-6834 6-29
40-6835 6-23
40-6836 6-25
40-6860 6-30
40-6862 6-31
40-6864 6-32
40-6866 6-33
40-6870 6-34
40-6871 6-34
40-6873 6-35
40-6874 6-35
40-6876 6-36
40-6877 6-36
40-6879 6-37
40-6881 6-49
40-6882 6-49
40-6883 6-37
40-6892 6-46
40-6893 6-46
40-6897 6-44
40-6898 6-44
40-7010 10-2
40-7014 10-4
40-7015 10-4
40-7016 10-4
40-7017 10-4
40-7020 10-2
40-7021 10-2
40-7023 10-2
40-7024 10-4

Visit product pages for additional size, anodize and color options.

Index

Part Number Index

40-7025 10-4
40-7026 10-4
40-7028 10-4
40-7029 10-4
40-7030 10-2
40-7031 10-4
40-7032 10-4
40-7033 10-4
40-7044 10-7
40-7045 10-4
40-7048 10-4
40-7049 10-7
40-7050 10-5
40-7053 10-4
40-7054 10-4
40-7055 10-4
40-7056 10-4
40-7058 10-20
40-7059 10-4
40-7060 10-4
40-7065 10-10
40-7068 10-21
40-7075 10-10
40-7076 10-10
40-7080 10-13
40-7082 10-12
40-7085 10-10
40-7087 10-10
40-7090 10-13
40-7092 10-12
40-7093 10-13
40-7094 10-12
40-7099 10-19
40-7102 10-19
40-7110 10-18
40-7115 10-7
40-7116 10-7
40-7203 10-28
40-7204 10-32
40-7208 10-26
40-7209 10-26
40-7214 10-30
40-7216 10-31
40-7218 10-33
40-7234 10-29
40-7235 10-29
40-7236 10-29
40-7257 10-8
40-7312 10-31
40-7320 10-32
40-7400 10-24
40-7503 10-30
40-7505 10-28
40-7508 10-44
40-7511 10-44
40-7512 10-44
40-7516 10-33
40-7522 10-35
40-7523 10-35
40-7532 10-26
40-7533 10-26
40-7580 10-39
40-7583 10-39
40-7584 10-40
40-7585 10-40
40-7588 10-41
40-7595 10-42
40-7596 10-42
40-7600 10-29
40-7601 10-29
40-7602 10-29
40-8016 2-93
40-8020 2-83
40-8080 2-92
40-8220 9-7
40-8221 9-7
40-8230 9-7
40-8231 9-7
40-8235 9-7
40-8236 9-7
40-8320 9-2
40-8321 9-2
40-8322 9-2
40-8323 9-2
40-8325 9-2
40-8326 9-2
40-8340 9-2
40-8341 9-2
40-8345 9-2
40-8346 9-2
40-8375 9-2
40-8376 9-2
40-8385 9-2
40-8386 9-2
40-8390 9-2
40-8391 9-2
40-8448 9-11
40-8449 9-11
40-8510 9-18
40-8511 9-18
40-8512 9-18
40-8513 9-18
40-8530 9-14
40-8531 9-14
40-8535 9-15
40-8536 9-15
40-8540 9-15
40-8541 9-15
40-8545 9-10
40-8546 9-10
40-8555 9-12
40-8556 9-12
40-8565 9-13
40-8566 9-13
40-8582 9-16
40-8583 9-16
40-8586 9-17
40-8587 9-17
40-8630 9-9
40-8631 9-9
40-8635 9-9
40-8636 9-9
40-8900 3-159
45-2053 4-124
45-2107 4-125
45-2431 4-48
45-2432 4-46
45-2433 4-42
45-2434 4-40
45-2435 4-55
45-2436 4-54
45-2437 4-53
45-2438 4-52
45-2525 8-9
45-2530 8-9
45-2535 8-9
45-2540 8-9
45-2545 8-9
45-2550 8-9
45-2555 8-9
45-2560 8-9
45-2561 8-9
45-2562 8-9
45-2563 8-9
45-2564 8-9
45-4301 3-88
45-4302 3-76
45-4303 3-87
45-4304 3-101
45-4305 3-28
45-4306 3-27
45-4307 3-26
45-4332 3-116
45-4334 3-118
45-4335 3-69
45-4336 3-117
45-4338 3-119
45-4340 3-62
45-4351 3-45
45-4355 3-65
45-4365 3-31
45-4366 3-30
45-4367 3-29
45-4376 3-85
45-4480 3-74
45-4481 3-73
45-4545 2-94
45-4545-Lite 2-94
45-4590 2-95
45-6525 6-23
45-6526 6-25
45-6598 6-43
45-6800 6-50
45-6880 6-49
45-7010 10-2
45-7020 10-2
45-7024 10-4
45-7030 10-2
45-7032 10-4
45-7034 10-22
45-7035 10-4
45-7036 10-4
45-7037 10-22
45-7053 10-4

Visit product pages for additional size, anodize and color options.

80/20 BUILD YOUR IDEA
More on 80/20® products available at 8020.net

Part Number Index

45-7054 10-4
45-7058 10-20
45-7065 10-10
45-7075 10-10
45-7080 10-13
45-7082 10-12
45-7085 10-10
45-7090 10-13
45-7092 10-12
45-7110 10-18
45-7204 10-32
45-7233 10-29
45-7237 10-29
45-7239 10-29
45-7248 10-5
45-7317 10-36
45-7320 10-32
45-7323 10-36
45-7506 10-28
45-7508 10-44
45-7511 10-44
45-7512 10-44
45-7522 10-35
45-7523 10-35
45-7534 10-26
45-7535 10-26
45-7595 10-42
45-7596 10-42
45-7603 10-29
45-7604 10-29
45-7605 10-29
45-8220 9-7
45-8221 9-7
45-8230 9-7
45-8231 9-7
45-8235 9-7
45-8236 9-7
45-8320 9-2
45-8321 9-2
45-8340 9-2
45-8341 9-2
45-8510 9-18
45-8511 9-18
45-8536 9-15
45-8537 9-15
45-8630 9-9
45-8631 9-9
45-8635 9-9
45-8636 9-9
45-9090 2-96
65-2053 4-124
65-2054 4-30
65-2056 4-114
65-2057 4-135
65-2058 4-114
65-2069 4-126
65-2070 4-113
65-2082 4-119
65-2083 4-119
65-2084 4-95
65-2087 4-120
65-2088 4-126
65-2089 4-120
65-2090 4-129
65-2101 4-76
65-2102 4-77
65-2103 4-78
65-2107 4-125
65-2108 8-40
65-2123 4-128
65-2125 4-126
65-2126 4-123
65-2178 5-20
65-2179 5-20
65-2181 5-20
65-2182 5-20
65-2183 5-20
65-2184 5-20
65-2187 5-19
65-2188 5-19
65-2189 5-19
65-2190 5-23
65-2191 5-24
65-2195 5-24
65-2200 5-23
65-2201 5-24
65-2202 5-23
65-2207 5-22
65-2208 5-22
65-2209 5-22
65-2212 5-23
65-2213 5-23
65-2215 5-22
65-2264 8-32
65-2265 8-32
65-2282 4-67
65-2312 5-8
65-2314 5-8
65-2316 5-8
65-2317 5-6
65-2318 5-6
65-2321 5-7
65-2323 5-7
65-2333 5-10
65-2334 5-10
65-2335 5-11
65-2336 5-11
65-2337 5-9
65-2338 5-9
65-2340 5-4
65-2341 5-4
65-2342 5-4
65-2343 5-4
65-2344 5-4
65-2345 5-4
65-2346 5-4
65-2424 4-136
65-2429 4-136
65-2452 4-22
65-2453 4-22
65-2454 4-22
65-2455 4-22
65-2456 4-22
65-2457 4-22
65-2460 4-26
65-2461 4-26
65-2462 4-26
65-2463 4-26
65-2464 4-26
65-2465 4-140
65-2467 4-26
65-2468 4-26
65-2470 4-26
65-2471 4-26
65-2472 4-27
65-2473 4-27
65-2474 4-27
65-2475 4-27
65-2476 4-27
65-2477 4-27
65-2478 4-27
65-2479 4-26
65-2480 4-25
65-2481 4-25
65-2482 4-25
65-2483 4-23
65-2484 4-23
65-2485 4-23
65-2500 8-28
65-2501 8-28
65-2502 8-28
65-2503 8-28
65-2504 8-28
65-2505 8-28
65-2506 8-29
65-2507 8-29
65-2508 8-29
65-2509 8-29
65-2510 8-29
65-2511 8-29
65-2601 4-10
65-2602 4-10
65-2603 4-10
65-2604 4-10
65-2605 4-10
65-2606 4-10
65-2607 4-10
65-2608 4-10
65-2609 4-12
65-2610 4-12
65-2611 4-12
65-2612 4-12
65-2613-S 4-13
65-2613-T 4-13
65-2614-S 4-13
65-2614-T 4-13
65-2615 4-15
65-2616 4-15
65-2617 4-15
65-2618 4-15
65-2619 4-15
65-2620 4-15
65-2621 4-15
65-2622 4-15

Visit product pages for additional size, anodize and color options.

Index

Part Number Index

65-2623 4-15
65-2624 4-15
65-2629 4-12
65-2630 4-12
65-2631 4-15
65-2632 4-15
65-2633 4-17
65-2634 4-17
65-2635 4-17
65-2636 4-17
65-2637 4-17
65-2640 4-18
65-2641 4-11
65-2642 4-11
65-2643 4-12
65-2644 4-12
65-2645 4-12
65-2646 4-11
65-2647 4-11
65-2648 4-11
65-2649 4-11
65-2650 4-16
65-2651 4-19
65-2652 4-19
65-2653 4-19
65-2654 4-19
65-2655 4-19
65-2656 4-19
65-2657 4-19
65-2658 4-19
65-2659 4-20
65-2660-S 4-14
65-2660-T 4-14
65-2661-S 4-14
65-2661-T 4-14
65-2662-S 4-14
65-2662-T 4-14
65-2663-S 4-14
65-2663-T 4-14
65-2664 4-20
65-2666 4-19
65-2667 4-19
65-2668 4-19
65-2669 4-19
65-2714 5-16
65-2730 4-116
65-2745 4-130
65-2763 4-121
65-2780 4-115
65-2781 4-115
65-2782 4-115
65-2800 4-24
65-2802 4-24
65-2804 4-24
65-2806 4-24
65-2808 4-21
65-2810 4-58
65-2812 4-19
65-2813 4-19
65-2814 4-21
65-2815 4-21
65-2851 8-45
65-2852 8-45
65-2899 8-24
65-2901 5-30
65-2902 5-30
65-2903 5-30
65-2904 5-30
65-2905 5-30
65-2906 5-30
65-2907 5-30
65-2908 5-30
65-2922 4-119
65-2923 4-119
65-2927 4-120
65-2929 4-120
65-2932 4-119
65-2933 4-119
65-2937 4-120
65-2939 4-120
65-2952 4-119
65-2953 4-119
65-2957 4-120
65-2959 4-120
65-3058 3-181
65-3059 3-177
65-3061 3-177
65-3062 3-181
65-3063 3-177
65-3064 3-181
65-3065 3-177
65-3067 3-181
65-3071 3-181
65-3104 3-177
65-3106 3-181
65-3110 3-181
65-3111 3-177
65-3112 3-181
65-3114 3-177
65-3118 3-177
65-3122 3-181
65-3123 3-182
65-3208 3-189
65-3214 3-189
65-3258 3-188
65-3260 3-188
65-4486 4-131
65-4487 4-132
65-4490 4-38
65-4503 3-111
65-4504 3-112
65-4505 3-36
65-4506 3-35
65-4509 3-110
65-4510 3-32
65-4512 3-114
65-4513 3-115
65-6065 11-6
65-6068 11-5
65-6071 11-5
65-6080 11-6
65-6091 11-4
65-6092 11-4
65-6096 11-2
65-6097 11-2
65-6098 11-2
65-6099 11-2
65-6102 11-3
65-6103 11-3
65-6104 11-3
65-6106 11-2
65-6107 11-3
65-6108 11-3
65-6109 11-3
65-7095 10-26
65-7100 10-26
65-7150 10-26
65-7151 10-26
65-7152 10-45
65-7153 10-26
65-7155 10-26
65-7156 10-45
65-7157 10-45
65-7158 10-45
65-7159 10-45
65-7162 10-43
65-7163 10-43
65-7164 10-43
65-7166 10-45
65-7167 10-26
65-7168 10-26
65-7169 10-26
65-7170 10-26
65-7171 10-43
65-7172 10-43
65-7173 10-43
65-7174 10-45
65-7175 10-45
65-7176 10-27
65-7177 10-45
65-7178 10-45
65-7179 10-27
65-7180 10-45
65-7181 10-45
65-7182 10-43
65-7183 10-43
65-7184 10-43
65-7185 10-45
65-7186 10-45
65-7187 10-27
65-7188 10-45
65-7189 10-45
65-7190 10-43
65-7191 10-43
65-7192 10-43
65-7193 10-45
65-7194 10-45
65-7195 10-27
65-7196 10-45
65-7197 10-45
65-7198 10-45
65-7199 10-45
65-7200 10-45
65-7201 10-45

Visit product pages for additional size, anodize and color options.

80/20® BUILD YOUR IDEA
More on 80/20® products available at 8020.net

Part Number Index

65-7212 10-2
65-7221 10-27
65-7222 10-27
65-7224 10-2
65-7240 10-14
65-7241 10-15
65-7243 10-15
65-7244 10-14
65-7245 10-15
65-7246 10-14
65-7247 10-15
65-7248 10-14
65-7305 10-16
65-7313 10-37
65-7315 10-17
65-7500 10-27
65-7501 10-27
65-7510 10-37
65-7513 10-45
65-7514 10-45
65-7520 10-38
65-7521 10-38
65-7540 10-27
65-7541 10-27
65-7542 10-27
65-7543 10-27
65-7587 10-40
65-8415 9-8
65-8416 9-8
65-8570 9-20
65-8575 9-20
75-3400 3-204
75-3401 3-204
75-3404 3-199
75-3405 3-199
75-3406 3-199
75-3407 3-199
75-3408 3-199
75-3409 3-199
75-3410 3-199
75-3411 3-200
75-3412 3-200
75-3413 3-200
75-3414 3-201
75-3415 3-201
75-3416 3-201
75-3417 3-201
75-3418 3-201
75-3419 3-200
75-3420 3-200
75-3421 3-201
75-3422 3-201
75-3423 3-202
75-3425 3-201
75-3426 3-202
75-3427 3-202
75-3428 3-203
75-3429 3-203
75-3430 3-203
75-3431 3-203
75-3432 3-203
75-3433 3-203
75-3434 3-203
75-3435 3-199
75-3436 3-199
75-3437 3-199
75-3438 3-199
75-3439 3-199
75-3440 3-199
75-3441 3-199
75-3442 3-200
75-3443 3-200
75-3444 3-200
75-3445 3-201
75-3446 3-201
75-3447 3-201
75-3448 3-201
75-3449 3-201
75-3450 3-200
75-3451 3-200
75-3452 3-201
75-3453 3-201
75-3454 3-201
75-3455 3-202
75-3456 3-201
75-3457 3-202
75-3458 3-202
75-3459 3-203
75-3460 3-203
75-3461 3-203
75-3462 3-203
75-3463 3-203
75-3464 3-203
75-3465 3-203
75-3466 3-199
75-3467 3-199
75-3468 3-199
75-3469 3-200
75-3470 3-200
75-3471 3-201
75-3472 3-201
75-3473 3-202
75-3475 3-203
75-3476 3-203
75-3477 3-199
75-3478 3-202
75-3479 3-203
75-3480 3-199
75-3481 3-204
75-3482 3-199
75-3483 3-204
75-3500 3-202
75-3501 3-202
75-3502 3-202
75-3503 3-202
75-3504 3-202
75-3505 3-200
75-3506 3-202
75-3507 3-200
75-3508 3-202
75-3509 3-199
75-3510 3-199
75-3511 3-199
75-3512 3-201
75-3513 3-201
75-3514 3-201
75-3515 3-199
75-3516 3-199
75-3517 3-199
75-3518 3-199
75-3519 3-199
75-3520 3-200
75-3521 3-200
75-3522 3-200
75-3523 3-201
75-3524 3-201
75-3525 3-201
75-3526 3-201
75-3527 3-202
75-3528 3-201
75-3529 3-202
75-3530 3-203
75-3531 3-203
75-3533 3-203
75-3534 3-203
75-3535 3-203
75-3536 3-203
75-3537 3-204
75-3538 3-204
75-3539 3-204
75-3540 3-204
75-3541 3-200
75-3552 3-204
75-3556 3-204
75-3558 3-204
75-3562 3-204
75-3563 3-204
75-3571 3-204
75-3572 3-204
75-3573 3-204
75-3574 3-204
75-3575 3-204
75-3576 3-204
75-3578 3-204
75-3581 3-204
75-3583 3-204
75-3584 3-200
75-3585 3-200
75-3587 3-200
75-3588 3-200
75-3589 3-200
75-3590 3-200
75-3591 3-200
75-3592 3-200
75-3593 3-200
75-3594 3-200
75-3595 3-200
75-3596 3-200
75-3597 3-201
75-3598 3-200
75-3599 3-199
75-3600 3-199
75-3601 3-199
75-3602 3-199

Visit product pages for additional size, anodize and color options.

Index

Part Number Index

75-3603 3-199
75-3605 3-199
75-3615 3-201
75-3616 3-200
75-3617 3-202
75-3618 3-202
75-3619 3-201
75-3620 3-203
75-3621 3-203
75-3622 3-199
75-3623 3-203
75-3624 3-203
75-3625 3-203
75-3626 3-203
75-3627 3-203
75-3628 3-200
75-3629 3-202
75-3630 3-203
75-3632 3-193
75-3633 3-193
75-3634 3-203
75-3635 3-193
75-3636 3-193
75-3637 3-193
75-3638 3-193
75-3639 3-200
75-3640 3-199
75-3641 3-199
75-3642 3-199
75-3643 3-199
75-3644 3-200
75-3645 3-200
75-3647 3-200
75-3648 3-202
75-3649 3-201
75-3650 3-201
75-3651 3-201
75-3652 3-202
75-3653 3-202
75-3654 3-200
75-3655 3-200
75-3656 3-204
75-3800 3-194
75-3801 3-194
75-3802 3-194
75-3803 3-194
75-3804 3-194
75-3805 3-194
75-3806 3-194
75-3807 3-194
75-3808 3-194
75-3809 3-194
75-3810 3-194
75-3811.....3-194
75-3812 3-195
75-3813 3-195
75-3814 3-195
75-3815 3-195
75-3816 3-195
75-3817 3-195
75-3818 3-195
75-3819 3-195
75-3820 3-195
75-3821 3-195
75-3822 3-195
75-3823 3-195
75-3824 3-195
75-3825 3-195
75-3826 3-196
75-3827 3-196
75-3828 3-196
75-3829 3-196
75-3830 3-196
75-3831 3-196
75-3832 3-196
75-3833 3-196
75-3834 3-196
75-3835 3-196
75-3836 3-196
75-3837 3-196
75-3838 3-197
75-3839 3-197
75-3840 3-197
75-3841 3-197
75-3842 3-198
75-3843 3-197
75-3844 3-198
75-3845 3-198
75-3846 3-197
75-3847 3-197
75-3848 3-198
75-3849 3-198
75-3850 3-198
75-3851 3-198

80/20 BUILD YOUR IDEA
More on 80/20® products available at 8020.net

SOLUTIONS
MADE WITH 80/20

Mobile Workstations
Machine Safety Guards
Laboratory Enclosures
Hydraulic Lifts
Robotic Arms
Machine Frames
Conveying Systems
Modular Work Cells
Flow Racks
Displays
Pick and Place Systems
Clean Room Enclosures
Data Centers
Vehicle Outfitting
Miter Saw Stand
Office Furniture
Racing Simulator
Much More!

80/20
BUILD YOUR IDEA

Copyright © 2022 80/20® LLC All rights reserved.
Catalog 24, Part No. CAT0223
1701 South 400 East, Columbia City, IN 46725
Ph: 260-248-8030 • Fax: 260-248-8029

LEARN MORE AT 8020.NET